PK-TK-2207
CORROSION INHIBITOR TANK

DESIGN TEMP. : 85 °C
DESIGN PRESS. : ATM + FULL OF WATER
TANK NOMINAL CAPACITY : 1 m³

PK-2207 A/B/C/D (NOTE 1)
CORROSION INHIBITOR PACKAGE

RATED CAPACITY (HIGH PRESS.) : 2.27 L/H
INJECTION PRESS. (HIGH) : 62 BARG
RATED CAPACITY (LOW PRESS.) : 2.28 L/H
INJECTION PRESS. (LOW) : 9 BARG
DESIGN TEMP. : 55 °C

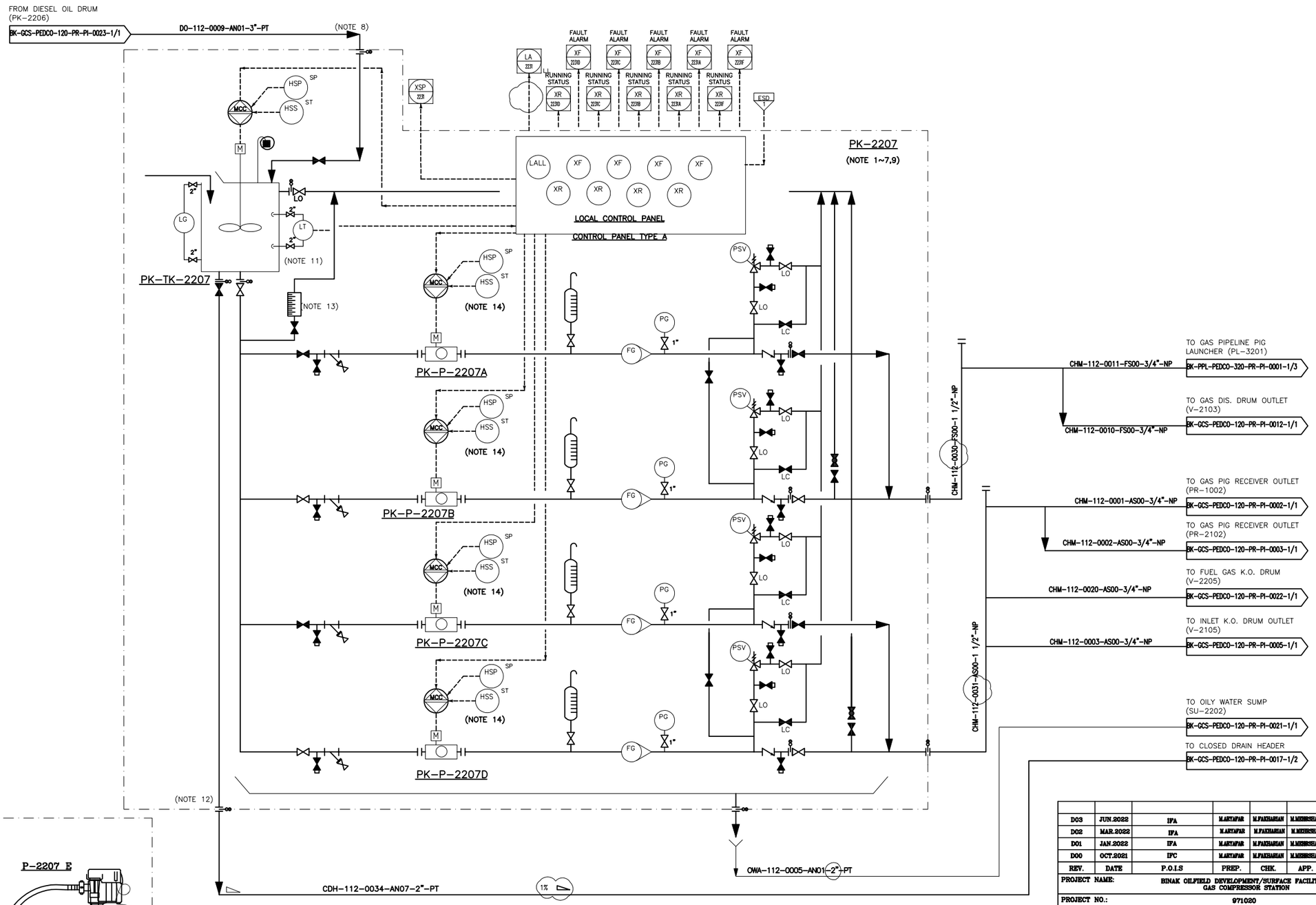

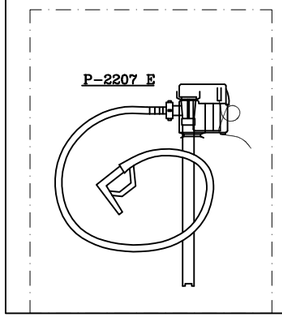

P-2207 F
CHEMICAL LOADING PUMP

RATED CAPACITY : 3 M³/HR
DIFF. PRESS. : 0.5 BAR

NOTES

1-THE GIVEN VALUES FOR INJECTION CAPACITY OF ALL INJECTION PACKAGES ARE PRELIMINARY AND SHALL BE FINALIZED BY VENDOR.

2- PIPING SHOULD CONSIDER VENT CONNECTION IN HIGH POINT AND DRAIN CONNECTION IN LOW POINTS.

3- VERTICALLY MOUNTED, FLOW FROM BOTTOM TO TOP (FOR ROTAMETER).

4- ALL VALVES IN CHEMICAL PACKAGES SHALL BE LOCKABLE TYPE.

5- CHEMICAL RATES AND INJECTION POINTS WILL BE FINALIZED AFTER RECEIVING VENDOR DATA.

6-ONE PORTABLE PUMP IS REQUIRED FOR FILLING THE CHEMICAL TANKS IN WAREHOUSE AND WILL BE SUPPLY BY VENDOR.

7- LOCAL MCC (MOTOR CONTROL CENTER) OR PDP (POWER DISTRIBUTION PANEL) IS IN VENDOR SCOPE OF WORK.

8- FUEL OIL LINE REQUIREMENT (CONNECTION, FLANGE, ...) SHALL BE CONSIDERD BY CHEMICAL VENDOR.

9- BACK PRESSURE VALVE SHOULD BE CONSIDERED IN DISCHARGE HEADER BY VENDOR.

10- DELETED.

11- REQUIRED LOGIC FOR LALL TO BE IMPLEMENTED BY LCP SUCH AS PUMP AND MIXER SHUTDOWN (BY VENDOR).

12- CHEMICAL SPILLAGE SHALL BE ROUTED TO CLOSE DRAIN.

13- CALIBRATION POT TO BE READABLE FROM STROCK ADJUSTMENT MANUAL DEVICE AND TO BE LOCATED CLOSE TO SUCTION BLOCK VALVE.

14-MCC AND START/STOP PUSH BOTTOMTO BE CONSIDERED BY VENDOR ON LCP.

GENERAL NOTE

LEGEND

REFERENCE DRAWING	DRG. No.
Utility Flow Diagram	BK-GCS-PEDCO-120-PR-UF-0001
Symbol & Legend For PFD & P&ID	BK-GCS-PEDCO-120-PR-PI-0001

KEY PLAN

REV.	DATE	P.O.I.S	PREP.	CHK.	APP.	AUT.
D03	JUN.2022	IFA	M.ARYAFAR	M.PAKHARIAN	M.MEHRSHAD	••.••
D02	MAR.2022	IFA	M.ARYAFAR	M.PAKHARIAN	M.MEHRSHAD	••.••
D01	JAN.2022	IFA	M.ARYAFAR	M.PAKHARIAN	M.MEHRSHAD	••.••
D00	OCT.2021	IFC	M.ARYAFAR	M.PAKHARIAN	M.MEHRSHAD	••.••

REV.	DESCRIPTION	BY	DATE	BY	DATE
		CHECKED		REV. APPR.	
•••	••••••••••	••.••	•••.••••	••.••	•••.••••

PROJECT NAME: BINAK OILFIELD DEVELOPMENT/SURFACE FACILITIES GAS COMPRESSOR STATION

PROJECT NO.: 971020

EPC CONTRACTOR: HIRGAN ENERGY – DESIGN & INSPECTION COMPANIES

EPD/EPC CONTRACTOR (GC): PETROIRAN DEVELOPMENT COMPANY — PEDCO

DRAWING TITLE: P&ID – Corrosion Inhibitor Package

(VENDOR TITLE BLOCK)••

SCALE	SIZE	DRAWING NO.	SHEET NO.	REV.
NS	A3	BK-GCS-PEDCO-120-PR-PI-0018	1 OF 1	D03

اصل و کلیه نسخ این نقشه و حق اقتباس متعلق به شرکت ملی مناطق نفت خیز جنوب میباشد.
THE ORIGINAL AND ALL COPIES OF THIS DRAWING TOGETHER WITH THE COPYRIGHT THEREIN ARE THE SOLE PROPERTY OF
N.I.S.O.C./ FIELDS

BINAK OILFIELD DEVELOPMENT
SURFACE FACILITIES
GAS COMPRESSOR STATION

DATE	SCALE	DRAWING BY	CHECKED BY	PROJECT ENG.

NO CONSTRUCTION PERMITTED UNLESS DRAWING APPROVED

APPROVED FOR CONSTRUCTION BY: DATE:

BUDGET REF.	LOCATION	SIZE	CLASS	SERIAL NO.	SHEET	REVISION
053-073-9184	F	2	A	708796	1 OF 1	D03