طرح نگهداشت و افزایش تولید ۲۷ مخزن

INSTRUMENT HOOK-UP DIAGRAM

نگهداشت و افزایش تولید میدان نفتی بینک

REV.	DATE	PURPOSE OF ISSUE/STATUS	PREPARED BY:	CHECKED BY:	APPROVED BY:	CLIENT APPROVAL
D01	JUN.2022	IFA	P.Hajisadeghi	M.Fakharian	M.Mehrshad	
D00	MAR.2022	IFC	P.Hajisadeghi	M.Fakharian	M.Mehrshad	

CLASS:2 | CLIENT Doc. Number:F2J-708945

STATUS:

- IDC: Inter-Discipline Check
- IFC: Issued For Comment
- IFA: Issued For Approval
- AFD: Approved For Design
- AFC: Approved For Construction
- AFP: Approved For Purchase
- AFQ: Approved For Quotation
- IFI: Issued For Information
- AB-R: As-Built for CLIENT Review
- AB-A: As-Built - Approved

NISOC	پروژه نگهداشت و افزایش تولید میدان نفتی بینک سطح‌الارض احداث ردیف تراکم گاز در ایستگاه جمع آوری بینک	PEDCO HIRGAN ENERGY

شماره پیمان:	INSTRUMENT HOOK-UP DIAGRAM								شماره صفحه: 02 از 34
053-073-9184	پروژه	بسته کاری	صادرکننده	تسهیلات	رشته	نوع مدرک	سریال	نسخه	
	BK	GCS	PEDCO	120	IN	DG	0002	D01	

REVISION RECORD SHEET

REV. / PAGE	D00	D01	D02	D03	D04	D05	D06	REV. / PAGE	D00	D01	D02	D03	D04	D05	D06
1	X	X						34		X					
2	X	X						35							
3	X	X						36							
4	X	X						37							
5	X	X						38							
6	X	X						39							
7	X	X						40							
8	X	X						41							
9	X	X						42							
10	X	X						43							
11	X	X						44							
12	X	X						45							
13	X	X						46							
14	X	X						47							
15	X	X						48							
16	X	X						49							
17	X	X						50							
18	X	X						51							
19	X	X						52							
20	X							53							
21	X							54							
22	X							55							
23	X							56							
24	X							57							
25	X	X						58							
26	X	X						59							
27	X							60							
28	X							61							
29	X							62							
30	X							63							
31	X							64							
32		X						65							
33		X						66							

Contents

Description	Page(s)
COVER SHEET	01
REVISION INDEX	02
TABLE OF CONTENT	03
BULK MATERIAL SUMMARY SHEET	04
LEGEND	05
REFERENCE DOCUMENTS/STANDARDS	06
REFERENCE DOCUMENTS/STANDARDS	07
PRESSURE GAUGE (LINE/DRAIN)	08
PRESSURE GAUGE (LINE/DRAIN)	09
PRESSURE GAUGE (VESSEL/DRAIN)	10
PRESSURE DIFFERENTIAL GAUGE	11
PRESSURE TRANSMITTER (GAS SERVICE)	12
PRESSURE TRANSMITTER	13
PRESSURE TRANSMITTER (LIQUID)	14
DIFFERENTIAL PRESSURE TRANSMITTER (GAS/LINE)	15
DIFFERENTIAL PRESSURE TRANSMITTER (GAS/VESSEL)	16
DP CELL FLOW TRANSMITTER (GAS/LINE)	17
DP CELL FLOW TRANSMITTER (LIQUID/LINE)	18
RESTRICTION ORIFICE PLATE	19
DISPLACER LEVEL TRANS./LEVEL GAUGE-SIDE-SIDE (DIRECT CONNECTION)	20
LEVEL GAUGE-SIDE-SIDE (DIRECT CONNECTION)	21
DISPLACER LEVEL TRANS. /LEVEL GAUGE-SIDE-SIDE (DIRECT CONNECTION)	22
DISPLACER LEVEL TRANS. - TOP MOUNTED (INTERNAL)	23
DIFF.PRESSURE LEVEL TRANSMITTER (VESSEL MOUNTED)	24
DIFF.PRESSURE LEVEL TRANSMITTER (VESSEL MOUNTED)	25
TEMPERATURE GAUGE	26
TEMPERATURE TRANSMITTER	27
CONTROL VALVE	28
ON/OFF VALVE	29
SAFETY & RELIEF VALVE	30
CORROSION COUPON (INSTALLATION IN 12'O CLOCK)(GAS SERVICE)	31
CORROSION PROBE/TRANSMITTER (INSTALLATION IN 12'O CLOCK) (GAS SERVICE)	32
ROTAMETER	33

NISOC	پروژه نگهداشت و افزایش تولید میدان نفتی بینک سطح‌الارض احداث ردیف تراکم گاز در ایستگاه جمع آوری بینک	PEDCO HIRGAN ENERGY

شماره پیمان:	INSTRUMENT HOOK-UP DIAGRAM								شماره صفحه: 04 از 34
053-073-9184	پروژه	بسته کاری	صادرکننده	تسهیلات	رشته	نوع مدرک	سریال	نسخه	
	BK	GCS	PEDCO	120	IN	DG	0002	D01	

01

BULK MATERIAL SUMMARY SHEET

CODE	DESCRIPTION	SIZE	MATERIAL	TOTAL QTY	UNIT	TOTAL + 20% SPARE	REMARK
01	TUBING, SEAMLESS, WALL THICKNESS 0.065"	1/2"O.D	AISI 316L SS	850	M	1020	
02	TUBING, SEAMLESS, WALL THICKNESS 0.065"	½" O.D.	AISI 316L SS	240	M	288	
07	DOUBLE FERRULE COMPRESSION TYPE MALE CONNECTOR	1/2"NPTMx1/4"O.D	AISI 316L SS	244	PIECES	293	-
08	DOUBLE FERRULE COMPRESSION TYPE MALE CONNECTOR	1/2"NPTMx1/2"O.D	AISI 316L SS	412	PIECES	495	-
09	STRAIGHT UNION COMPRESSION TYPE DOUBLE FERRULE	1/2"O.D	AISI 316L SS	170	PIECES	204	-
10	STRAIGHT UNION COMPRESSION TYPE DOUBLE FERRULE	½" O.D.	AISI 316L SS	48	PIECES	58	
15	TUBING, SEAMLESS, WALL THICKNESS 0.049"	1/4"O.D.	AISI 316L SS	48.80	M	59	-
17	TUBE CAP	1/4"O.D.	AISI 316L SS	244	PIECES	293	-
18	SNUBBER (PULSATION DAMPER)	1/2"(NPTF.*NPTF)	AISI 316L SS	29	PIECES	35	BY VENDOR
19	3 WAY 2-VALVE MANIFOLD	2 x1/2"+ ¼"	AISI 316L SS	83	PIECES	100	BY VENDOR
21	5 - WAY VALVE MANIFOLD	2 X ½" + ¼"	AISI 316L SS	76	PIECES	92	BY VENDOR

NISOC	پروژه نگهداشت و افزایش تولید میدان نفتی بینک سطح‌الارض احداث ردیف تراکم گاز در ایستگاه جمع آوری بینک	PEDCO HIRGAN ENERGY

شماره پیمان:

053-073-9184

INSTRUMENT HOOK-UP DIAGRAM

پروژه	بسته کاری	صادرکننده	تسهیلات	رشته	نوع مدرک	سریال	نسخه
BK	GCS	PEDCO	120	IN	DG	0002	D01

PRESSURE GAUGE

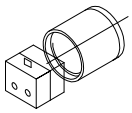
PRESSURE TRANSMITTER

PRESSURE SWITCH

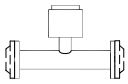
ULTRASONIC FLOWMETER

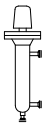
DISPLACER LEVEL TRANSMITTER

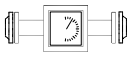
ROTAMETER

TEMPERAURE GAUGE

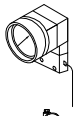
DIFF. PRESSURE GAUGE

TEMPERATURE TRANSMITTER

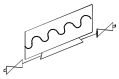
DIAPHRAGM SEAL

TEMPERATURE SWITCH

3-WAY 2 VALVES MANIFOLD
FOR PRESSURE GAUGES

SAFETY VALVE

CONTROL VALVE

CORROSION COUPON

ON/OFF VALVE

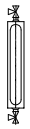
LEVEL GAUGE

5-WAY VALVE MANIFOLD

3-WAY 2 VALVES MANIFOLD
FOR PRESSURE TRANSMITTER
AND PRESSURE SWITCH

UNION

TUBE CAP

CONNECTOR

01

REFERENCE DOCUMENTS/STANDARDS

1	IPS STANDARD DRAWING	IPS-D-IN-104
2	PIPING ASSEMBLY DRAWING.	BK-GCS-PEDCO-120-PI-DW-0002
3	DETAILS OF SUPPORT INSTALLATION	BK-GCS-PEDCO-120-IN-DW-0001
4	Symbol & Legend For PFD and P&ID	BK-SSGRL-PEDCO-110-PR-PI-0001
5	P&ID - W018S	BK-W018S-PEDCO-110-PR-PI-0001
6	P&ID - W028	BK-W028-PEDCO-110-PR-PI-0001
7	P&ID - W046S	BK-W046S-PEDCO-110-PR-PI-0001
8	P&ID for Diesel Oil Drum- W0046S	BK-W046S-PEDCO-110-PR-PI-0002
9	P&ID for Potable Water Tank - W0046S	BK-W046S-PEDCO-110-PR-PI-0003
10	P&ID - W035	BK-W035-PEDCO-110-PR-PI-0001
11	P&ID - W008N	BK-W008N-PEDCO-110-PR-PI-0001
12	P&ID - Extension of Binak B/C Manifold	BK-W007S-PEDCO-110-PR-PI-0001
13	P&ID - W007S	BK-W007S-PEDCO-110-PR-PI-0002
14	P&ID for Diesel Oil Drum- W007S	BK-W007S-PEDCO-110-PR-PI-0003
15	P&ID for Potable Water Tank - W007S	BK-W007S-PEDCO-110-PR-PI-0004
16	P&ID for Diesel Oil Drum- BK14	BK-BK14-PEDCO-110-PR-PI-0001
17	P&ID for Potable Water Tank - BK14	BK-BK14-PEDCO-110-PR-PI-0002
18	P&ID for Diesel Oil Drum- BK12	BK-BK12-PEDCO-110-PR-PI-0001
19	P&ID for Potable Water Tank - BK12	BK-BK12-PEDCO-110-PR-PI-0002
20	P&ID for Diesel Oil Drum- BK15	BK-BK15-PEDCO-110-PR-PI-0001
21	P&ID for Potable Water Tank - BK15	BK-BK15-PEDCO-110-PR-PI-0002
22	P&ID for Diesel Oil Drum- BK05	BK-BK05-PEDCO-110-PR-PI-0001
23	P&ID for Potable Water Tank - BK05	BK-BK05-PEDCO-110-PR-PI-0002
24	Symbol & Legend For PFD and P&IDP&ID - Gas	BK-PPL-PEDCO-320-PR-PI-0003
25	Pipeline (to Siahmakan G.I. Station)	BK-PPL-PEDCO-320-PR-PI-0001
26	P&ID - Condensate Pipeline (to Binak PU)	BK-PPL-PEDCO-320-PR-PI-0002

01

REFERENCE DOCUMENTS/STANDARDS

27	Symbol & Legend For PFD and P&ID	BK-GCS-PEDCO-120-PR-PI-0001
28	P&ID- Gas Compression Inlet Gas Pipeline (Binak)	BK-GCS-PEDCO-120-PR-PI-0002
29	P&ID- Gas Compression Inlet Gas Pipeline (Golkhari)	BK-GCS-PEDCO-120-PR-PI-0003
30	P&ID - Slug Catcher System	BK-GCS-PEDCO-120-PR-PI-0004
31	P&ID - Gas Compression Inlet Knock Out Drum	BK-GCS-PEDCO-120-PR-PI-0005
32	P&ID - 1st Stage Gas Compression Suction Drums	BK-GCS-PEDCO-120-PR-PI-0006
33	P&ID - 1st Stage Gas Compression Compressors	BK-GCS-PEDCO-120-PR-PI-0007
34	P&ID - 1st Stage Gas Compression Air Coolers	BK-GCS-PEDCO-120-PR-PI-0008
35	P&ID - 2nd Stage Gas Compression Suction Drums	BK-GCS-PEDCO-120-PR-PI-0009
36	P&ID-2nd Stage Gas Compression Compressors	BK-GCS-PEDCO-120-PR-PI-0010
37	P&ID - 2nd Stage Gas Compression Air Coolers	BK-GCS-PEDCO-120-PR-PI-0011
38	P&ID - 2nd Stage Gas Compression Discharge Drum	BK-GCS-PEDCO-120-PR-PI-0012
39	P&ID - Gas Compression Dehydration Package	BK-GCS-PEDCO-120-PR-PI-0013
40	P&ID - Lean Glycol Storage Tank	BK-GCS-PEDCO-120-PR-PI-0014
41	P&ID - Instrument & Plant Air System	BK-GCS-PEDCO-120-PR-PI-0015
42	P&ID - Nitrogen Generation System	BK-GCS-PEDCO-120-PR-PI-0016
43	P&ID - Close Drain System	BK-GCS-PEDCO-120-PR-PI-0017
44	P&ID - Corrosion Inhibitor Package	BK-GCS-PEDCO-120-PR-PI-0018
45	P&ID - Methanol Injection Package	BK-GCS-PEDCO-120-PR-PI-0019
46	P&ID - LP Flare System	BK-GCS-PEDCO-120-PR-PI-0020
47	P&ID - Oily Water Sewer	BK-GCS-PEDCO-120-PR-PI-0021
48	P&ID - Fuel Gas System	BK-GCS-PEDCO-120-PR-PI-0022
49	P&ID - Diesel Oil System	BK-GCS-PEDCO-120-PR-PI-0023
50	P&ID - Potable Water System	BK-GCS-PEDCO-120-PR-PI-0024
51	P&ID - Glycol Sump Drum	BK-GCS-PEDCO-120-PR-PI-0025

TAP VALVE ORIENTATION (UP STREAM VIEW)

01

TYPE : A

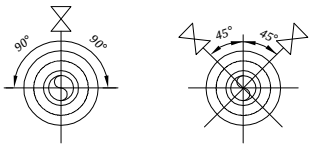

A-1 *A-2*

TYPE : B

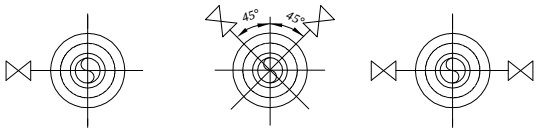

B-1 *B-2* *B-3*

TYPE : C

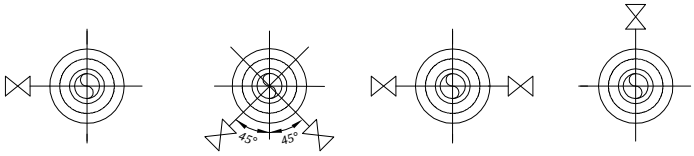

C-1 *C-2* *C-3* *C-4*

NOTE :

TYPE : A ---------- GAS SERVICE

TYPE : B ---------- STEAM SERVICE

TYPE : C ---------- LIQUID SERVICE

NISOC	پروژه نگهداشت و افزایش تولید میدان نفتی بینک سطح‌الارض احداث ردیف تراکم گاز در ایستگاه جمع آوری بینک	PEDCO HIRGAN ENERGY

شماره پیمان:
053-073-9184

INSTRUMENT HOOK-UP DIAGRAM

پروژه	بسته کاری	صادرکننده	تسهیلات	رشته	نوع مدرک	سریال	نسخه
BK	GCS	PEDCO	120	IN	DG	0002	D01

شماره صفحه: 09 از 34

TAG NUMBERS
PG-2101
PG-2102
PG-2103
PG-2104
PG-2112
PG-2115
PG-2142
PG-2271
PG-2293
PG-2295
PG-2111
PG-2124A
PG-2124B
PG-2124C
PG-2134A
PG-2134B
PG-2134C
PG-2301
PG-2103A
PG-2304A
PG-2303B
PG-2304B
PG-2304
PG-2301A
PG-2302A
PG-2301B
PG-2302B

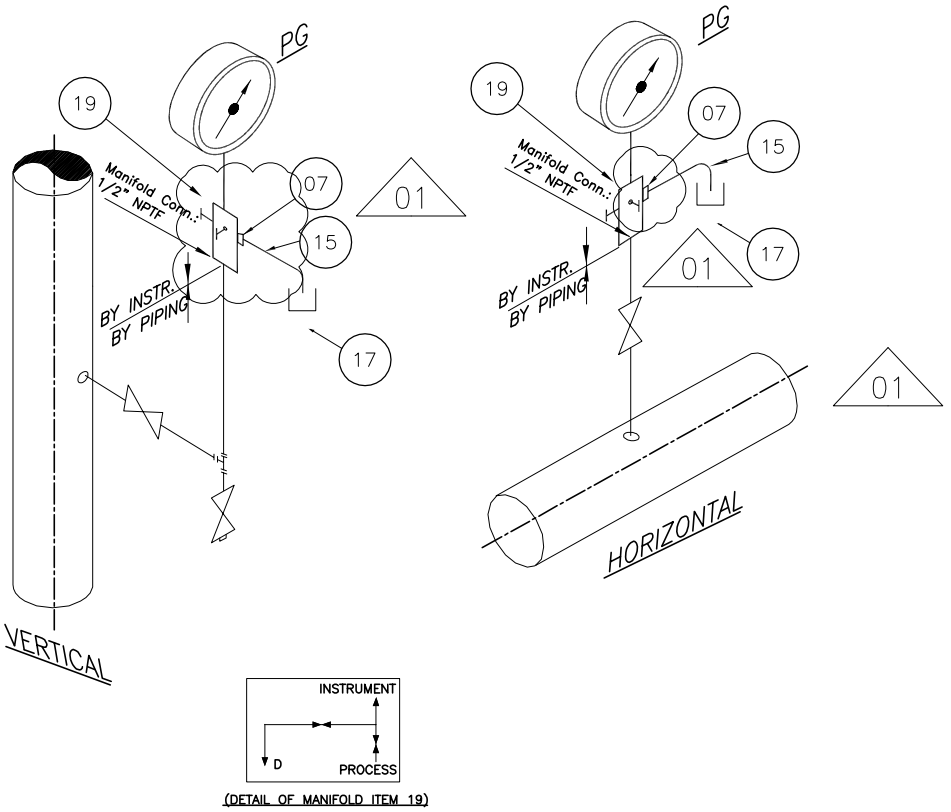

NOTES:

1-MANIFOLD SHALL BE SUITABLE FOR CONNECTING TO GAUGE

2-FOR PIPING CONNECTION REFER TO PIPING ASSEMBLY DRAWING. DOC NO."BK-GCS-PEDCO-120-PI-DW-0002."

01

DESCRIPTION : PRESSURE GAUGE (LINE/DRAIN)

CODE	DESCRIPTION	SIZE	MATERIAL	UNIT QTY	QTY	TOTAL QTY	UNIT	REMARK
07	DOUBLE FERRULE COMPRESSION TYPE MALE CONNECTOR	1/2"NPTMx1/4"O.D	AISI 316L SS	1	27	27	PIECES	-
15	TUBING, SEAMLESS, WALL THICKNESS 0.049"	1/4"O.D.	AISI 316L SS	0.20	27	5.40	M	-
17	TUBE CAP	1/4"O.D.	AISI 316L SS	1	27	27	PIECES	-
19	3 WAY 2-VALVE MANIFOLD	2 x1/2"+ ¼"	AISI 316L SS	1	27	27	PIECES	BY VENDOR

NISOC	پروژه نگهداشت و افزایش تولید میدان نفتی بینک سطح‌الارض احداث ردیف تراکم گاز در ایستگاه جمع آوری بینک	PEDCO HIRGAN ENERGY

شماره پیمان:
053-073-9184

INSTRUMENT HOOK-UP DIAGRAM

پروژه	بسته کاری	صادرکننده	تسهیلات	رشته	نوع مدرک	سریال	نسخه
BK	GCS	PEDCO	120	IN	DG	0002	D01

شماره صفحه: 10 از 34

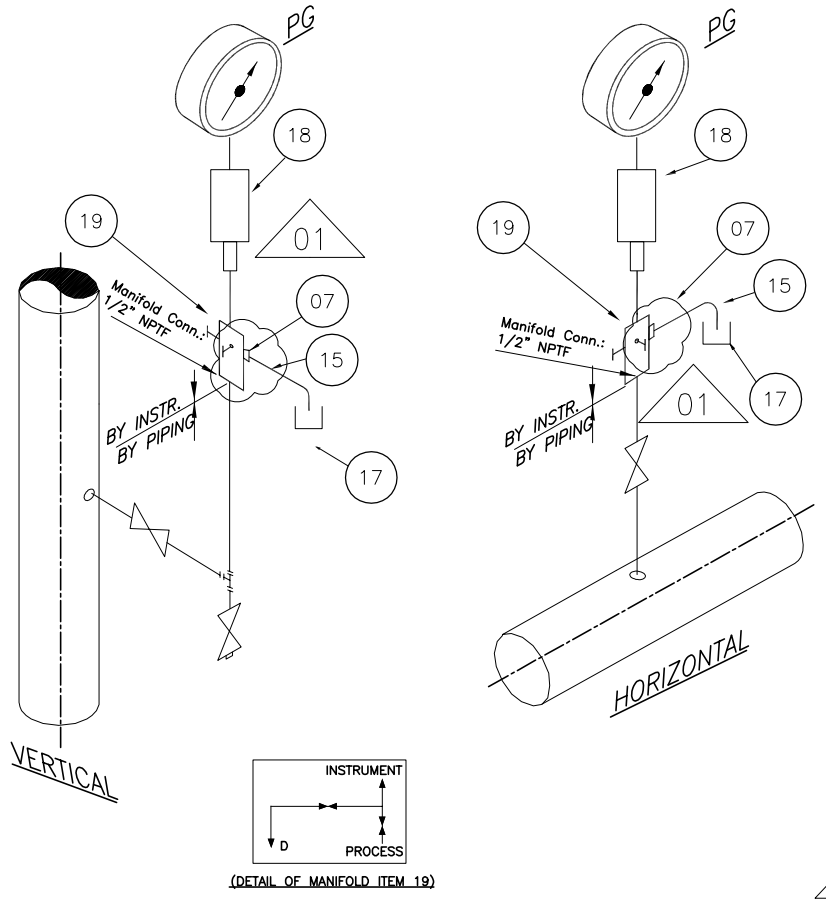

TAG NUMBERS
PG-2113A
PG-2113B
PG-2114A
PG-2114B
PG-2162
PG-2163A
PG-2163B
PG-2161
PG-2201
PG-2281
PG-2291
PG-2292
PG-2251A
PG-2251B
PG-2122A
PG-2123A
PG-2122B
PG-2123B
PG-2122C
PG-2123C
PG-2132A
PG-2133A
PG-2132B
PG-2133B
PG-2132C
PG-2133C
PG-2211
PG-2274
PG-2282

01

NOTES:
1-MANIFOLD SHALL BE SUITABLE FOR CONNECTING TO GAUGE
2-FOR PIPING CONNECTION REFER TO PIPING ASSEMBLY DRAWING. DOC NO."BK-GCS-PEDCO-120-PI-DW-0002."

01

DESCRIPTION : PRESSURE GAUGE (LINE/DRAIN)

CODE	DESCRIPTION	SIZE	MATERIAL	UNIT QTY	QTY	TOTAL QTY	UNIT	REMARK
07	DOUBLE FERRULE COMPRESSION TYPE MALE CONNECTOR	1/2"NPTMx1/4"O.D	AISI 316L SS	1	29	29	PIECES	-
15	TUBING, SEAMLESS, WALL THICKNESS 0.049"	1/4"O.D.	AISI 316L SS	0.20	29	5.8000	M	-
17	TUBE CAP	1/4"O.D.	AISI 316L SS	1	29	29	PIECES	-
18	SNUBBER (PULSATION DAMPER)	1/2"(NPTF.*NPTF)	AISI 316L SS	1	29	29	PIECES	-
19	3 WAY 2-VALVE MANIFOLD	2 x1/2"+ ¼"	AISI 316L SS	1	29	29	PIECES	BY VENDOR

NISOC	پروژه نگهداشت و افزایش تولید میدان نفتی بینک سطح‌الارض احداث ردیف تراکم گاز در ایستگاه جمع آوری بینک	PEDCO HIRGAN ENERGY

شماره پیمان:
053-073-9184

INSTRUMENT HOOK-UP DIAGRAM

پروژه	بسته کاری	صادرکننده	تسهیلات	رشته	نوع مدرک	سریال	نسخه
BK	GCS	PEDCO	120	IN	DG	0002	D01

شماره صفحه: 11 از 34

TAG NUMBERS
PG-2111
PG-2114
PG-2121A
PG-2121B
PG-2121C
PG-2131A
PG-2131B
PG-2131C
PG-2141
PG-2202
PG-2212
PG-2221
PG-2251
PG-2272
PG-2281
PG-2294
PG-2113
PG-2272

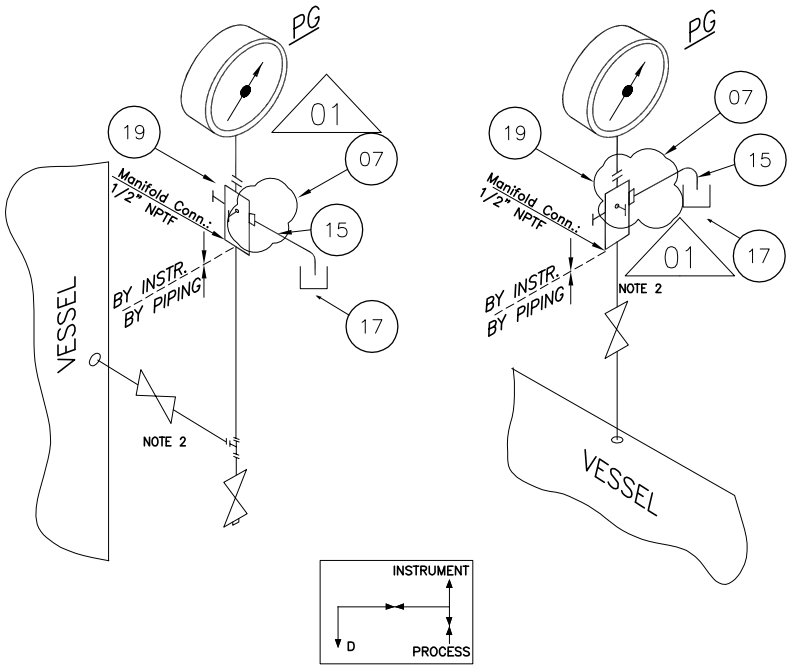

(DETAIL OF MANIFOLD ITEM 19)

01

NOTES:

1-MANIFOLD SHALL BE SUITABLE FOR CONNECTING TO GAUGE

2-FOR PIPING CONNECTION REFER TO PIPING ASSEMBLY DRAWING. DOC NO."BK-GCS-PEDCO-120-PI-DW-0002."

01

DESCRIPTION : PRESSURE GAUGE (VESSEL/DRAIN)

CODE	DESCRIPTION	SIZE	MATERIAL	UNIT QTY	QTY	TOTAL QTY	UNIT	REMARK
07	DOUBLE FERRULE COMPRESSION TYPE MALE CONNECTOR	1/2"NPTMx1/4"O.D	AISI 316L SS	1	18	18	PIECES	-
15	TUBING, SEAMLESS, WALL THICKNESS 0.049"	1/4"O.D.	AISI 316L SS	0.20	18	3.6000	M	-
17	TUBE CAP	1/4"O.D.	AISI 316L SS	1	18	18	PIECES	-
19	3 WAY 2-VALVE MANIFOLD	2 x1/2"+ ¼"	AISI 316L SS	1	18	18	PIECES	BY VENDOR

NISOC	پروژه نگهداشت و افزایش تولید میدان نفتی بینک سطح‌الارض احداث ردیف تراکم گاز در ایستگاه جمع آوری بینک	PEDCO HIRGAN ENERGY

شماره پیمان:
053-073-9184

INSTRUMENT HOOK-UP DIAGRAM

پروژه	بسته کاری	صادرکننده	تسهیلات	رشته	نوع مدرک	سریال	نسخه
BK	GCS	PEDCO	120	IN	DG	0002	D01

شماره صفحه: 12 از 34

TAG NUMBERS
PDG-2113A
PDG-2113B
PDG-2271

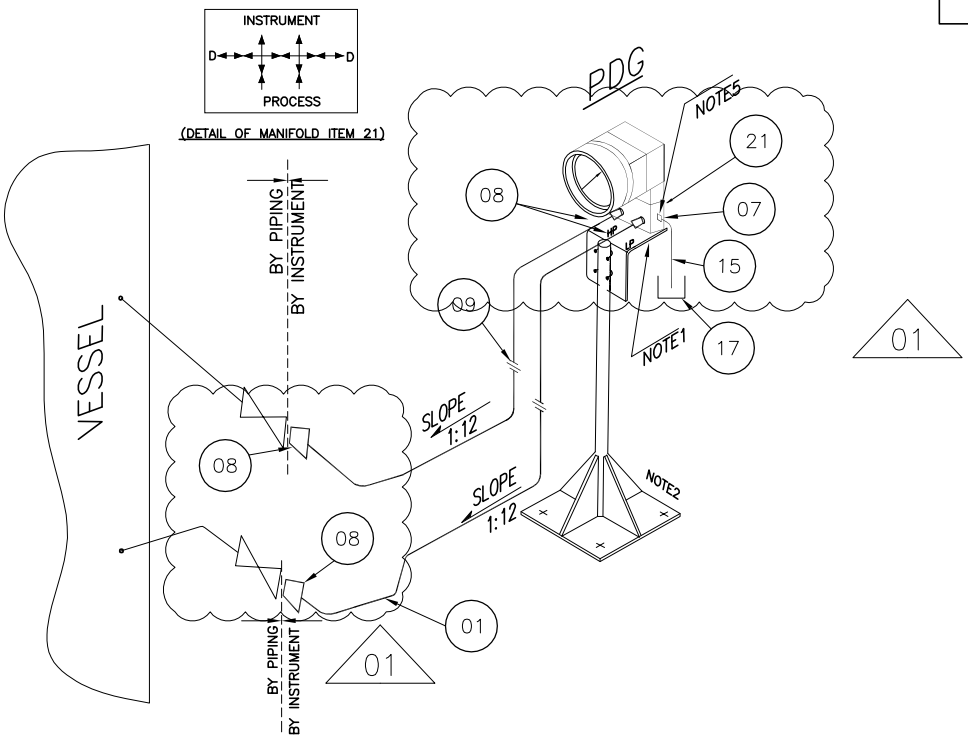

NOTES:
1-(5) VALVES MANIFOLD WITH MOUNTING BRACKET, U-BOLTS AND NUTS ARE SUPPLIED BY VENDOR.
2-FOR DETAILS OF SUPPORT INSTALLATION REFER TO BK-GCS-PEDCO-120-IN-DW-0001.
3-USE OF UNION SHALL BE AVOIDED WHEREVER POSSIBLE.
4-FOR PIPING CONNECTION REFER TO PIPING ASSEMBLY DRAWING. DOC NO."BK-GCS-PEDCO-120-PI-DW-0002."
5-EACH MANIFOLD IS DEFINED WITH TWO 1/4"NPTF DRAIN CONNECTION .

01

DESCRIPTION : PRESSURE DIFFERENTIAL GAUGE

CODE	DESCRIPTION	SIZE	MATERIAL	UNIT QTY	QTY	TOTAL QTY	UNIT	REMARK
1	TUBING, SEAMLESS, WALL THICKNESS 0.065"	1/2"O.D	AISI 316L SS	10	3	30	M	
07	DOUBLE FERRULE COMPRESSION TYPE MALE CONNECTOR	1/2"NPTMx1/4"O.D	AISI 316L SS	2	3	6	PIECES	-
08	DOUBLE FERRULE COMPRESSION TYPE MALE CONNECTOR	1/2"NPTMx1/2"O.D	AISI 316L SS	4	3	12	PIECES	-
09	STRAIGHT UNION COMPRESSION TYPE DOUBLE FERRULE	1/2"O.D	AISI 316L SS	2	3	6	PIECES	-
15	TUBING, SEAMLESS, WALL THICKNESS 0.049"	1/4"O.D.	AISI 316L SS	0.40	3	1.2000	M	-
17	TUBE CAP	1/4"O.D.	AISI 316L SS	2	3	6	PIECES	-
21	5 - WAY VALVE MANIFOLD	2 X ½" + ¼"	AISI 316L SS	1	3	3	PIECES	-

NISOC	پروژه نگهداشت و افزایش تولید میدان نفتی بینک سطح‌الارض احداث ردیف تراکم گاز در ایستگاه جمع آوری بینک	PEDCO HIRGAN ENERGY

شماره پیمان:
053-073-9184

INSTRUMENT HOOK-UP DIAGRAM

پروژه	بسته کاری	صادرکننده	تسهیلات	رشته	نوع مدرک	سریال	نسخه
BK	GCS	PEDCO	120	IN	DG	0002	D01

شماره صفحه: 13 از 34

TAG NUMBERS	TAG NUMBERS
PIT-2135C	PIT-2102
PIT-2151	PIT-2104
PIT-2271	PIT-2111
PIT-2272	PIT-2116
PIT-2201	PIT-2122A
PIT-2202	PIT-2123A
PIT-2203	PIT-2124A
PIT-2201A	PIT-2125A
PIT-2201B	PIT-2122B
PIT-2201C	PIT-2123B
PIT-2211A	PIT-2124B
PIT-2211B	PIT-2125B
PIT-2211C	PIT-2122C
	PIT-2123C
	PIT-2124C
	PIT-2125C
	PIT-2131A
	PIT-2132A
	PIT-2133A
	PIT-2134A
	PIT-2131B
	PIT-2132B
	PIT-2133B
	PIT-2134B
	PIT-2131C
	PIT-2132C
	PIT-2133C
	PIT-2134C
	PIT-2135A
	PIT-2135B

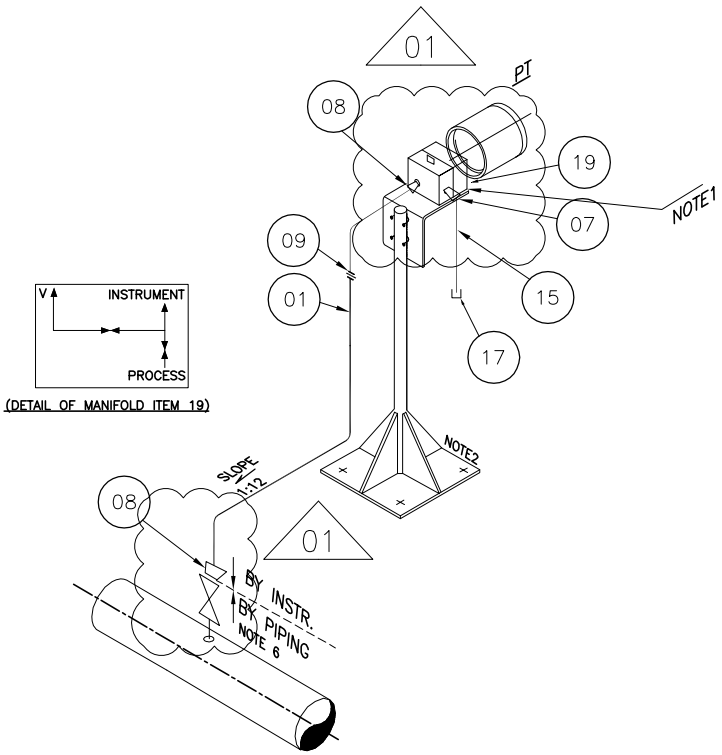

SMITTER (GAS SERVICE)

NOTES:

1-VALVES MANIFOLD WITH MOUNTING BRACKET, U-BOLTS AND NUTS ARE SUPPLIED BY TRANSMITTER VENDOR.
2-FOR DETAILS OF SUPPORT INSTALLATION REFER TO BK-GCS-PEDCO-120-IN-DW-0001.
3-USE OF UNION SHALL BE AVOIDED WHEREVER POSSIBLE.
4-MANIFOLD SHALL BE SUITABLE FOR CONNECTING TO TRANSMITTER.
5-FOR PIPING CONNECTION REFER TO PIPING ASSEMBLY DRAWING. DOC NO."BK-GCS-PEDCO-120-PI-DW-0002."
6-PROCESS CONNECTION TO BE FROM TOP IN 12'O CLOCK.

01

DESCRIPTION : PRESSURE TRANSMITTER

CODE	DESCRIPTION	SIZE	MATERIAL	UNIT QTY	QTY	TOTAL QTY	UNIT	REMARK
1	TUBING, SEAMLESS, WALL THICKNESS 0.065"	1/2"O.D	AISI 316L SS	10	43	430	M	
07	DOUBLE FERRULE COMPRESSION TYPE MALE CONNECTOR	1/2"NPTMx1/4"O.D	AISI 316L SS	2	43	86	PIECES	-
08	DOUBLE FERRULE COMPRESSION TYPE MALE CONNECTOR	1/2"NPTMx1/2"O.D	AISI 316L SS	4	43	172	PIECES	-
09	STRAIGHT UNION COMPRESSION TYPE DOUBLE FERRULE	1/2"O.D	AISI 316L SS	2	43	86	PIECES	-
15	TUBING, SEAMLESS, WALL THICKNESS 0.049"	1/4"O.D.	AISI 316L SS	0.40	43	17.2000	M	-
17	TUBE CAP	1/4"O.D.	AISI 316L SS	2	43	86	PIECES	-
21	5 - WAY VALVE MANIFOLD	2 X ½" + ¼"	AISI 316L SS	1	43	43	PIECES	-

NISOC	پروژه نگهداشت و افزایش تولید میدان نفتی بینک سطح‌الارض احداث ردیف تراکم گاز در ایستگاه جمع آوری بینک	PEDCO HIRGAN ENERGY

شماره پیمان:
053-073-9184

INSTRUMENT HOOK-UP DIAGRAM

پروژه	بسته کاری	صادرکننده	تسهیلات	رشته	نوع مدرک	سریال	نسخه
BK	GCS	PEDCO	120	IN	DG	0002	D01

شماره صفحه: 14 از 34

TAG NUMBERS
PIT-2112
PIT-2113
PIT-2117

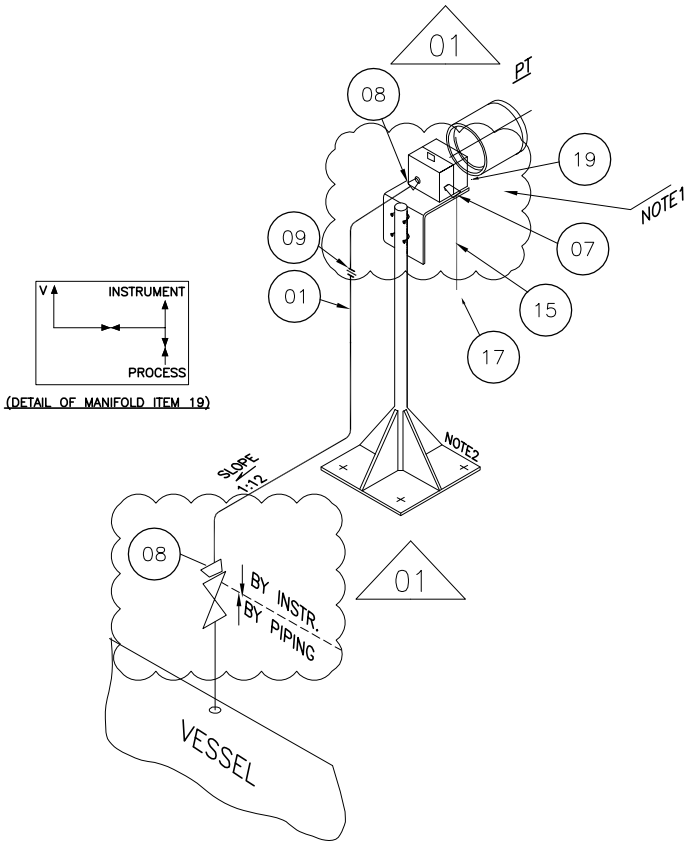

NOTES:

1-VALVES MANIFOLD WITH MOUNTING BRACKET, U-BOLTS AND NUTS ARE SUPPLIED BY TRANSMITTER VENDOR.
2-FOR DETAILS OF SUPPORT INSTALLATION REFER TO BK-GCS-PEDCO-120-IN-DW-0001.
3-USE OF UNION SHALL BE AVOIDED WHEREVER POSSIBLE.
4-MANIFOLD SHALL BE SUITABLE FOR CONNECTING TO TRANSMITTER.
5-FOR PIPING CONNECTION REFER TO PIPING ASSEMBLY DRAWING. DOC NO."BK-GCS-PEDCO-120-PI-DW-0002."
6-PROCESS CONNECTION TO BE FROM TOP IN 12'O CLOCK.

01

DESCRIPTION : PRESSURE TRANSMITTER

CODE	DESCRIPTION	SIZE	MATERIAL	UNIT QTY	QTY	TOTAL QTY	UNIT	REMARK
1	TUBING, SEAMLESS, WALL THICKNESS 0.065"	1/2"O.D	AISI 316L SS	10	3	30	M	
07	DOUBLE FERRULE COMPRESSION TYPE MALE CONNECTOR	1/2"NPTMx1/4"O.D	AISI 316L SS	2	3	6	PIECES	-
08	DOUBLE FERRULE COMPRESSION TYPE MALE CONNECTOR	1/2"NPTMx1/2"O.D	AISI 316L SS	4	3	12	PIECES	-
09	STRAIGHT UNION COMPRESSION TYPE DOUBLE FERRULE	1/2"O.D	AISI 316L SS	2	3	6	PIECES	-
15	TUBING, SEAMLESS, WALL THICKNESS 0.049"	1/4"O.D.	AISI 316L SS	0.40	3	1.2000	M	-
17	TUBE CAP	1/4"O.D.	AISI 316L SS	2	3	6	PIECES	-
19	3 WAY 2-VALVE MANIFOLD	2 x1/2"+ ¼"	AISI 316L SS	1	3	3	PIECES	BY VENDOR

NISOC	پروژه نگهداشت و افزایش تولید میدان نفتی بینک سطح‌الارض احداث ردیف تراکم گاز در ایستگاه جمع آوری بینک	PEDCO HIRGAN ENERGY

شماره پیمان:

053-073-9184

INSTRUMENT HOOK-UP DIAGRAM

پروژه	بسته کاری	صادرکننده	تسهیلات	رشته	نوع مدرک	سریال	نسخه
BK	GCS	PEDCO	120	IN	DG	0002	D01

شماره صفحه: 15 از 34

TAG NUMBERS
PIT-2113A
PIT-2113B
PIT-2114
PIT-2115
PIT-2281
PIT-2301

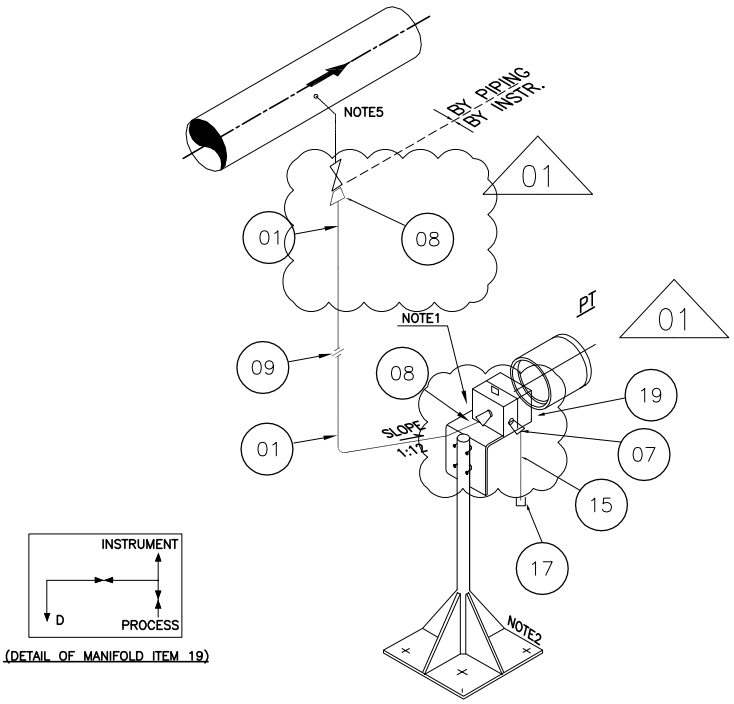

NOTES:

1-VALVES MANIFOLD WITH MOUNTING BRACKET, U-BOLTS AND NUTS ARE SUPPLIED BY SWITCH VENDOR.
2-FOR DETAILS OF SUPPORT INSTALLATION REFER TO BK-GCS-PEDCO-120-IN-DW-0001.
3-USE OF UNION SHALL BE AVOIDED WHEREVER POSSIBLE.
4-FOR PIPING CONNECTION REFER TO PIPING ASSEMBLY DRAWING. DOC NO."BK-GCS-PEDCO-120-PI-DW-0002."
5-PROCESS CONNECTION TO BE FROM SIDE, DUE TO ANY SPACE LIMITATION, ORIENTATION CAN BE DOWNWARDS UP TO 45 DEGREES.

01

DESCRIPTION : PRESSURE TRANSMITTER (LIQUID)

CODE	DESCRIPTION	SIZE	MATERIAL	UNIT QTY	QTY	TOTAL QTY	UNIT	REMARK
1	TUBING, SEAMLESS, WALL THICKNESS 0.065"	1/2"O.D	AISI 316L SS	10	6	60	M	
07	DOUBLE FERRULE COMPRESSION TYPE MALE CONNECTOR	1/2"NPTMx1/4"O.D	AISI 316L SS	2	6	12	PIECES	-
08	DOUBLE FERRULE COMPRESSION TYPE MALE CONNECTOR	1/2"NPTMx1/2"O.D	AISI 316L SS	4	6	24	PIECES	-
09	STRAIGHT UNION COMPRESSION TYPE DOUBLE FERRULE	1/2"O.D	AISI 316L SS	2	6	12	PIECES	-
15	TUBING, SEAMLESS, WALL THICKNESS 0.049"	1/4"O.D.	AISI 316L SS	0.40	6	2.4000	M	-
17	TUBE CAP	1/4"O.D.	AISI 316L SS	2	6	12	PIECES	-
19	3 WAY 2-VALVE MANIFOLD	2 x1/2"+ ¼"	AISI 316L SS	1	6	6	PIECES	BY VENDOR

NISOC	پروژه نگهداشت و افزایش تولید میدان نفتی بینک سطح‌الارض احداث ردیف تراکم گاز در ایستگاه جمع آوری بینک	PEDCO HIRGAN ENERGY

شماره پیمان: 053-073-9184

INSTRUMENT HOOK-UP DIAGRAM

پروژه	بسته کاری	صادرکننده	تسهیلات	رشته	نوع مدرک	سریال	نسخه
BK	GCS	PEDCO	120	IN	DG	0002	D01

شماره صفحه: 16 از 34

TAG NUMBERS
PDIT-2111
PDIT-2112
PDIT-2143

PDIT

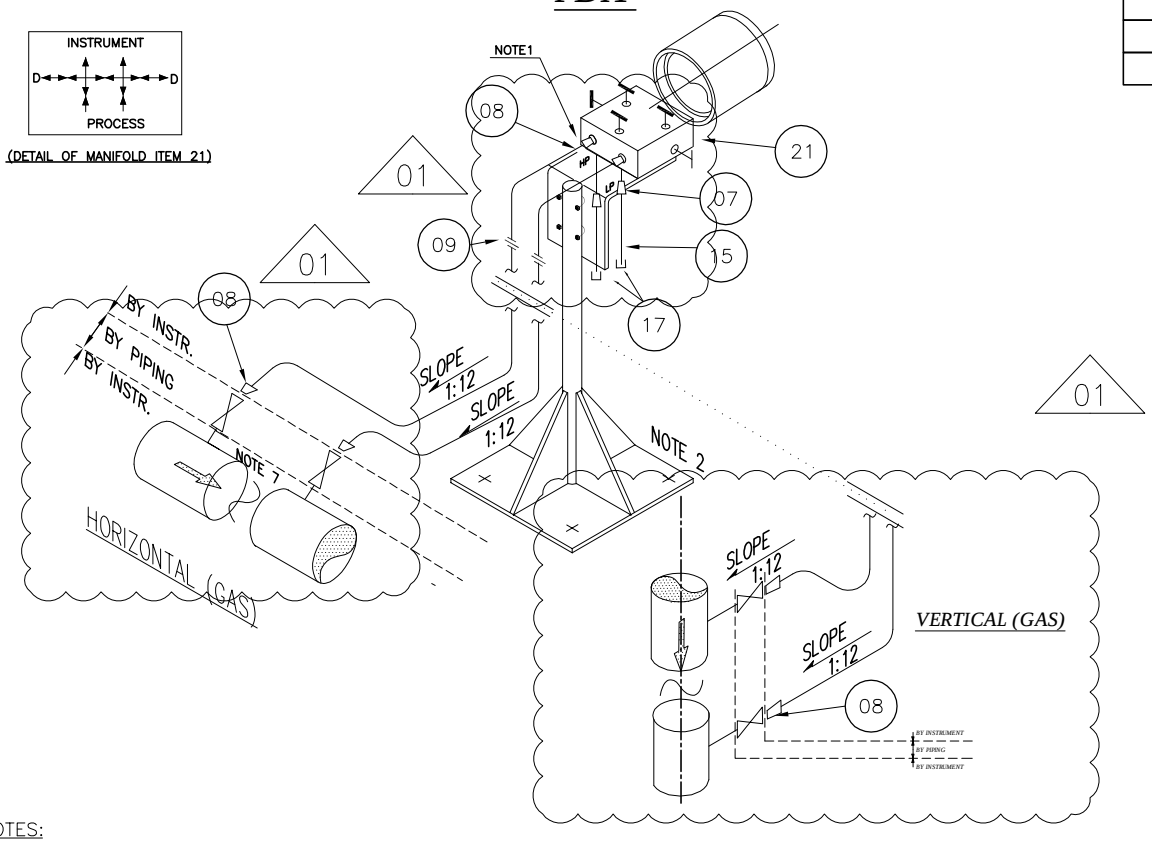

NOTES:

1-(5) VALVES MANIFOLD WITH MOUNTING BRACKET, U-BOLTS AND NUTS ARE SUPPLIED BY VENDOR.
2-FOR DETAILS OF SUPPORT INSTALLATION REFER TO BK-GCS-PEDCO-120-IN-DW-0001.
3-USE OF UNION SHALL BE AVOIDED WHEREVER POSSIBLE.
4-MANIFOLD SHALL BE SUITABLE FOR CONNECT TO TRANSMITTER.
5-FOR PIPING CONNECTION REFER TO PIPING ASSEMBLY DRAWING. DOC NO."BK-GCS-PEDCO-120-PI-DW-0002."
5-PROCESS CONNECTION TO BE FROM SIDE, DUE TO ANY SPACE LIMITATION, ORIENTATION CAN BE DOWNWARDS UP TO 45 DEGREES.

01

1`

CODE	DESCRIPTION	SIZE	MATERIAL	UNIT QTY	QTY	TOTAL QTY	UNIT	REMARK
1	TUBING, SEAMLESS, WALL THICKNESS 0.065"	1/2"O.D	AISI 316L SS	10	3	30	M	
07	DOUBLE FERRULE COMPRESSION TYPE MALE CONNECTOR	1/2"NPTMx1/4"O.D	AISI 316L SS	2	3	6	PIECES	-
08	DOUBLE FERRULE COMPRESSION TYPE MALE CONNECTOR	1/2"NPTMx1/2"O.D	AISI 316L SS	4	3	12	PIECES	-
09	STRAIGHT UNION COMPRESSION TYPE DOUBLE FERRULE	1/2"O.D	AISI 316L SS	2	3	6	PIECES	-
15	TUBING, SEAMLESS, WALL THICKNESS 0.049"	1/4"O.D.	AISI 316L SS	0.40	3	1.2000	M	-
17	TUBE CAP	1/4"O.D.	AISI 316L SS	2	3	6	PIECES	-
21	5 - WAY VALVE MANIFOLD	2 X ½" + ¼"	AISI 316L SS	1	3	3	PIECES	-

NISOC	پروژه نگهداشت و افزایش تولید میدان نفتی بینک سطح‌الارض احداث ردیف تراکم گاز در ایستگاه جمع آوری بینک	PEDCO HIRGAN ENERGY

شماره پیمان:
053-073-9184

INSTRUMENT HOOK-UP DIAGRAM

پروژه	بسته کاری	صادرکننده	تسهیلات	رشته	نوع مدرک	سریال	نسخه
BK	GCS	PEDCO	120	IN	DG	0002	D01

شماره صفحه: 17 از 34

TAG NUMBERS
PDIT-2121A
PDIT-2121B
PDIT-2121C
PDIT-2131A
PDIT-2131B
PDIT-2131C
PDIT-2141

PDIT

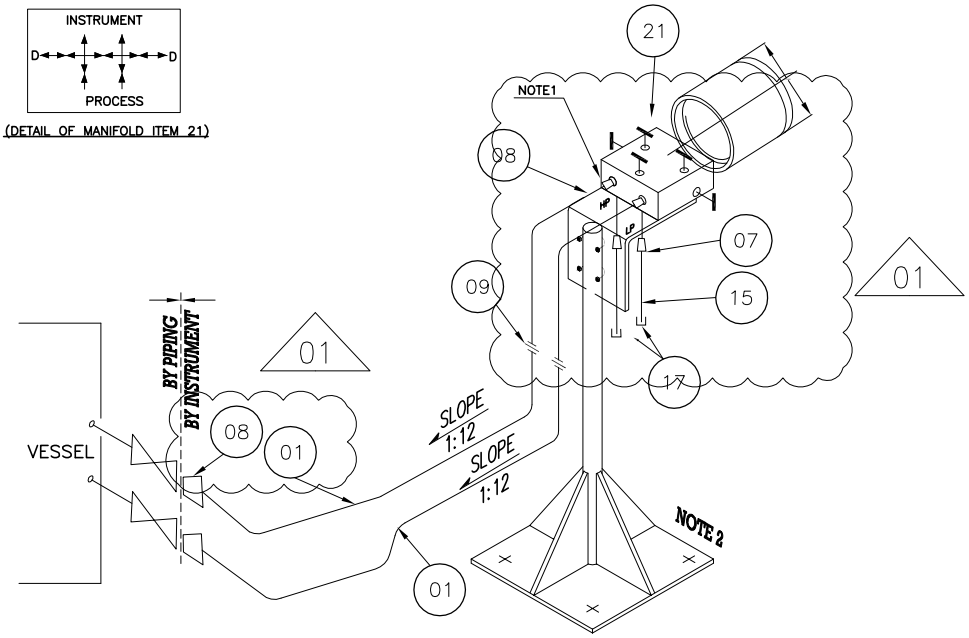

NOTES:

1 -5 VALVES MANIFOLDS WITH MOUNTING BRACKET, U-BOLTS AND NUTS SUPPLIED BY VENDOR.
2-FOR DETAILS OF SUPPORT INSTALLATION REFER TO BK-GCS-PEDCO-120-IN-DW-0001.
3-USE OF UNION SHALL BE AVOIDED WHEREVER POSSIBLE.
4-MANIFOLD SHALL BE SUITABLE FOR CONNECT TO TRANSMITTER.
5-FOR PIPING CONNECTION REFER TO PIPING ASSEMBLY DRAWING. DOC NO."BK-GCS-PEDCO-120-PI-DW-0002."

01

DESCRIPTION : DIFFERENTIAL PRESSURE TRANSMITTER (GAS/VESSEL)

CODE	DESCRIPTION	SIZE	MATERIAL	UNIT QTY	QTY	TOTAL QTY	UNIT	REMARK
1	TUBING, SEAMLESS, WALL THICKNESS 0.065"	1/2"O.D	AISI 316L SS	10	7	70	M	
07	DOUBLE FERRULE COMPRESSION TYPE MALE CONNECTOR	1/2"NPTMx1/4"O.D	AISI 316L SS	2	7	14	PIECES	-
08	DOUBLE FERRULE COMPRESSION TYPE MALE CONNECTOR	1/2"NPTMx1/2"O.D	AISI 316L SS	4	7	28	PIECES	-
09	STRAIGHT UNION COMPRESSION TYPE DOUBLE FERRULE	1/2"O.D	AISI 316L SS	2	7	14	PIECES	-
15	TUBING, SEAMLESS, WALL THICKNESS 0.049"	1/4"O.D.	AISI 316L SS	0.40	7	2.8000	M	-
17	TUBE CAP	1/4"O.D.	AISI 316L SS	2	7	14	PIECES	-
21	5 - WAY VALVE MANIFOLD	2 X ½" + ¼"	AISI 316L SS	1	7	7	PIECES	-

NISOC	پروژه نگهداشت و افزایش تولید میدان نفتی بینک سطح‌الارض احداث ردیف تراکم گاز در ایستگاه جمع آوری بینک	PEDCO HIRGAN ENERGY

شماره پیمان:
053-073-9184

INSTRUMENT HOOK-UP DIAGRAM

پروژه	بسته کاری	صادرکننده	تسهیلات	رشته	نوع مدرک	سریال	نسخه
BK	GCS	PEDCO	120	IN	DG	0002	D01

شماره صفحه: 18 از 34

TAG NUMBERS
~~FIT-2101~~
FIT-2102
FIT-2271

FT

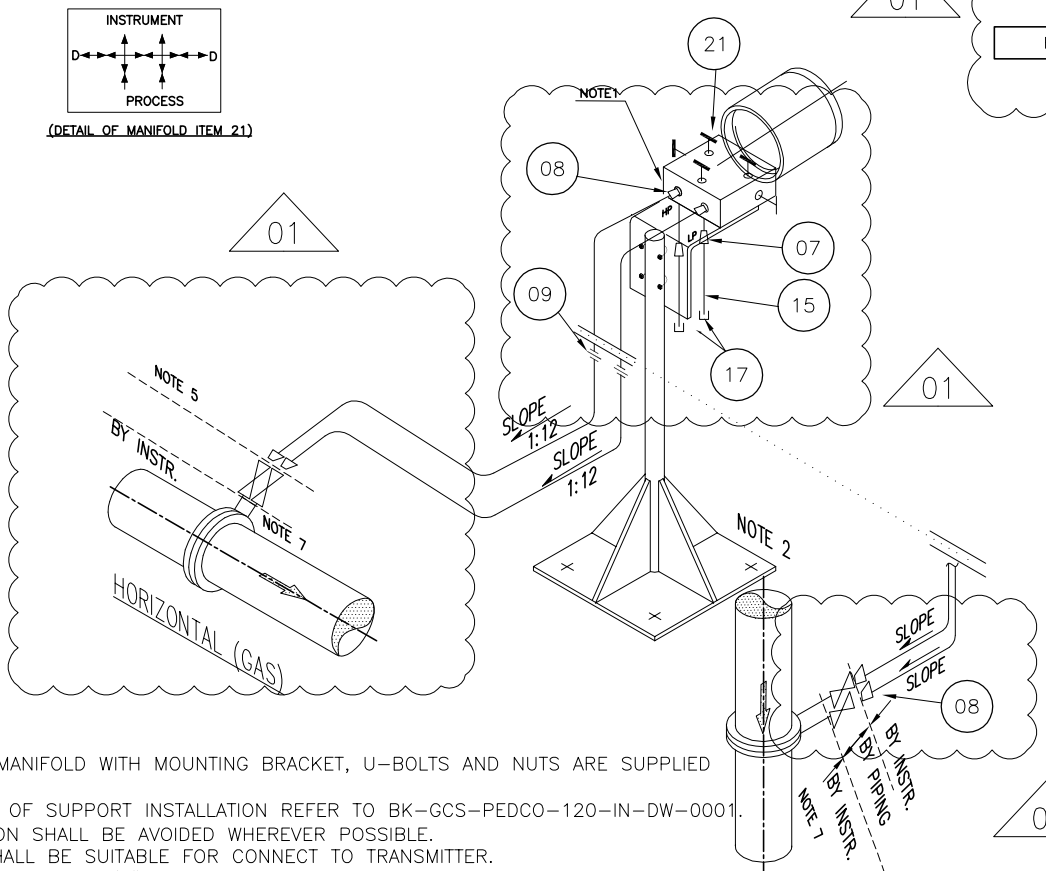

NOTES:

1-(5) VALVES MANIFOLD WITH MOUNTING BRACKET, U-BOLTS AND NUTS ARE SUPPLIED BY VENDOR.
2-FOR DETAILS OF SUPPORT INSTALLATION REFER TO BK-GCS-PEDCO-120-IN-DW-0001.
3-USE OF UNION SHALL BE AVOIDED WHEREVER POSSIBLE.
4-MANIFOLD SHALL BE SUITABLE FOR CONNECT TO TRANSMITTER.
5-ORIFICE FLANGE WITH 1/2" NPT TAPPING, GASKET, BOLTS & NUTS SHALL BE SUPPLIED BY INSTR. VENDOR.
6-FOR PIPING CONNECTION REFER TO PIPING ASSEMBLY DRAWING. DOC NO."MIAS-02-HE-120-PI-DW-0002"
7-PROCESS CONNECTION TO BE FROM SIDE, DUE TO ANY SPACE LIMITATION, ORIENTATION CAN BE DOWNWARDS UP TO 45 DEGREES.

DESCRIPTION : DIFFERENTIAL PRESSURE TRANSMITTER (GAS/VESSEL)

CODE	DESCRIPTION	SIZE	MATERIAL	UNIT QTY	QTY	TOTAL QTY	UNIT	REMARK
1	TUBING, SEAMLESS, WALL THICKNESS 0.065"	1/2"O.D	AISI 316L SS	10	3	30	M	
07	DOUBLE FERRULE COMPRESSION TYPE MALE CONNECTOR	1/2"NPTMx1/4"O.D	AISI 316L SS	2	3	6	PIECES	-
08	DOUBLE FERRULE COMPRESSION TYPE MALE CONNECTOR	1/2"NPTMx1/2"O.D	AISI 316L SS	4	3	12	PIECES	-
09	STRAIGHT UNION COMPRESSION TYPE DOUBLE FERRULE	1/2"O.D	AISI 316L SS	2	3	6	PIECES	-
15	TUBING, SEAMLESS, WALL THICKNESS 0.049"	1/4"O.D.	AISI 316L SS	0.40	3	1.2000	M	-
17	TUBE CAP	1/4"O.D.	AISI 316L SS	2	3	6	PIECES	-
21	5 - WAY VALVE MANIFOLD	2 X ½" + ¼"	AISI 316L SS	1	3	3	PIECES	-

NISOC	پروژه نگهداشت و افزایش تولید میدان نفتی بینک سطح‌الارض احداث ردیف تراکم گاز در ایستگاه جمع آوری بینک	PEDCO HIRGAN ENERGY

شماره پیمان:
053-073-9184

INSTRUMENT HOOK-UP DIAGRAM

پروژه	بسته کاری	صادرکننده	تسهیلات	رشته	نوع مدرک	سریال	نسخه
BK	GCS	PEDCO	120	IN	DG	0002	D01

شماره صفحه: 19 از 34

TAG NUMBERS
FIT-2111

FT

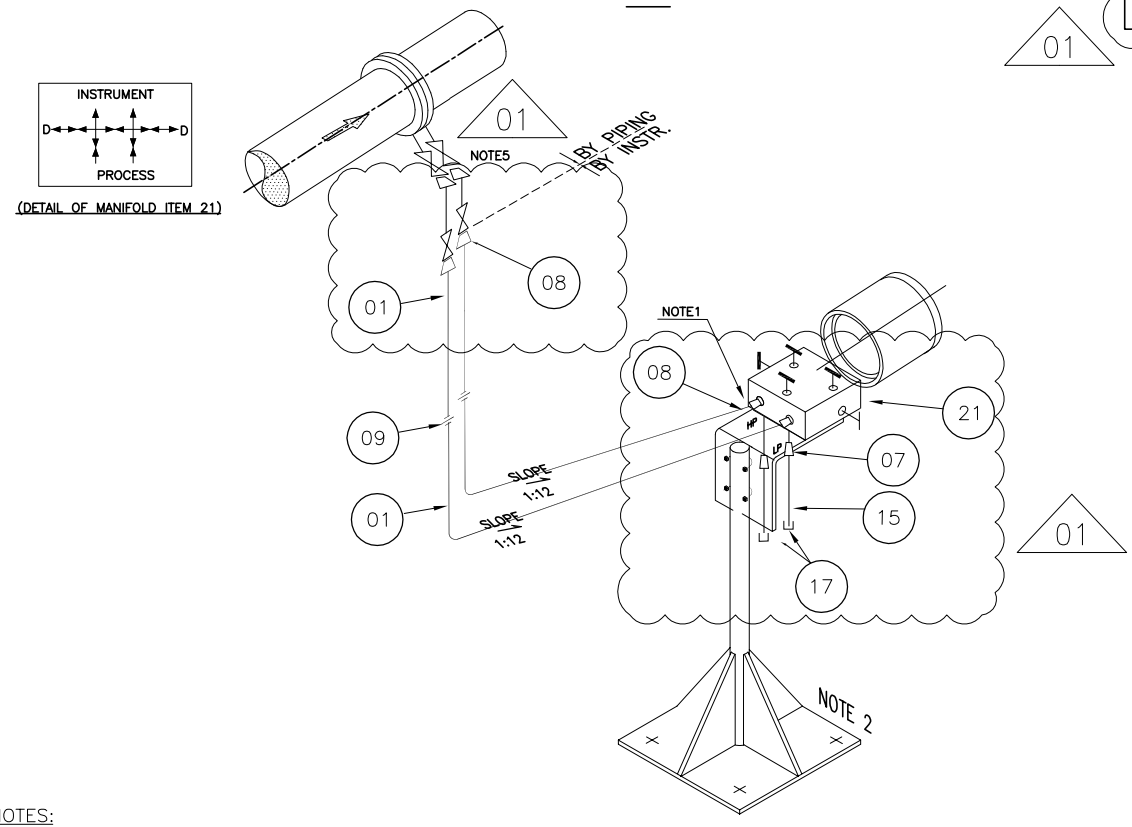

NOTES:

1-(5) VALVES MANIFOLD WITH MOUNTING BRACKET, U-BOLTS AND NUTS ARE SUPPLIED BY VENDOR.
2-FOR DETAILS OF SUPPORT INSTALLATION REFER TO BK-GCS-PEDCO-120-IN-DW-0001.
3-USE OF UNION SHALL BE AVOIDED WHEREVER POSSIBLE.
4-MANIFOLD SHALL BE SUITABLE FOR CONNECT TO TRANSMITTER.
5-ORIFICE FLANGE WITH 1/2" NPT TAPPING, GASKET, BOLTS & NUTS SHALL BE SUPPLIED BY INSTR. VENDOR.
6-FOR PIPING CONNECTION REFER TO PIPING ASSEMBLY DRAWING. DOC NO."MIAS-02-HE-120-PI-DW-0002"
7-PROCESS CONNECTION TO BE FROM SIDE, DUE TO ANY SPACE LIMITATION, ORIENTATION CAN BE DOWNWARDS UP TO 45 DEGREES.

01

DESCRIPTION : DIFFERENTIAL PRESSURE TRANSMITTER (GAS/VESSEL)

CODE	DESCRIPTION	SIZE	MATERIAL	UNIT QTY	QTY	TOTAL QTY	UNIT	REMARK
1	TUBING, SEAMLESS, WALL THICKNESS 0.065"	1/2"O.D	AISI 316L SS	10	1	10	M	
07	DOUBLE FERRULE COMPRESSION TYPE MALE CONNECTOR	1/2"NPTMx1/4"O.D	AISI 316L SS	2	1	2	PIECES	-
08	DOUBLE FERRULE COMPRESSION TYPE MALE CONNECTOR	1/2"NPTMx1/2"O.D	AISI 316L SS	4	1	4	PIECES	-
09	STRAIGHT UNION COMPRESSION TYPE DOUBLE FERRULE	1/2"O.D	AISI 316L SS	2	1	2	PIECES	-
15	TUBING, SEAMLESS, WALL THICKNESS 0.049"	1/4"O.D.	AISI 316L SS	0.40	1	0.4000	M	-
17	TUBE CAP	1/4"O.D.	AISI 316L SS	2	1	2	PIECES	-
21	5 - WAY VALVE MANIFOLD	2 X ½" + ¼"	AISI 316L SS	1	1	1	PIECES	-

NISOC	پروژه نگهداشت و افزایش تولید میدان نفتی بینک سطح‌الارض احداث ردیف تراکم گاز در ایستگاه جمع آوری بینک	PEDCO HIRGAN ENERGY

شماره پیمان:

053-073-9184

INSTRUMENT HOOK-UP DIAGRAM

پروژه	بسته کاری	صادرکننده	تسهیلات	رشته	نوع مدرک	سریال	نسخه
BK	GCS	PEDCO	120	IN	DG	0002	D01

شماره صفحه: 20 از 34

TAG NUMBERS
RO-2112
RO-2133A
RO-2133B
RO-2133C
RO-2141
RO-2142
RO-2151
RO-2162
RO-2271
RO-2261

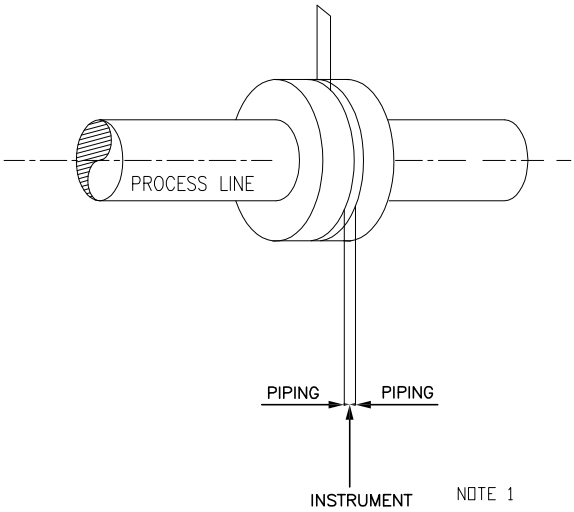

RATING FOR FLANGE ACCORDING TO INDIVIDUAL DATA SHEET.

NOTES:

1-FLANGE, GASKET, BOLTS & NUTS BY PIPING.

2-FOR PIPING CONNECTION REFER TO PIPING ASSEMBLY DRAWING. DOC NO."BK-GCS-PEDCO-120-PI-DW-0002."

DESCRIPTION : RESTRICTION ORIFICE PLATE

CODE	DESCRIPTION	SIZE	MATERIAL	UNIT QTY	QTY	TOTAL QTY	UNIT	REMARK

NISOC	پروژه نگهداشت و افزایش تولید میدان نفتی بینک سطح‌الارض احداث ردیف تراکم گاز در ایستگاه جمع آوری بینک	PEDCO HIRGAN ENERGY

شماره پیمان:
053-073-9184

INSTRUMENT HOOK-UP DIAGRAM

پروژه	بسته کاری	صادرکننده	تسهیلات	رشته	نوع مدرک	سریال	نسخه
BK	GCS	PEDCO	120	IN	DG	0002	D01

شماره صفحه: 21 از 34

TAG NUMBERS	
LG-2301	LG-2111
LT-2301	LT-2111
LG-2302	LG-2112
LT-2302	LT-2113
	LG-2114 (A/B/C/D)
	LT-2114
	LG-2115
	LT-2116
	LG-2116
	LT-2119
	LG-2121A
	LT-2121A
	LG-2121B
	LT-2121B
	LG-2121C
	LT-2121C
	LG-2131A
	LT-2131A
	LG-2131B
	LT-2131B
	LG-2131C
	LT-2131C
	LG-2141
	LT-2141
	LG-2221
	LT-2221
	LG-2251
	LT-2251
	LG-2271
	LT-2271

01

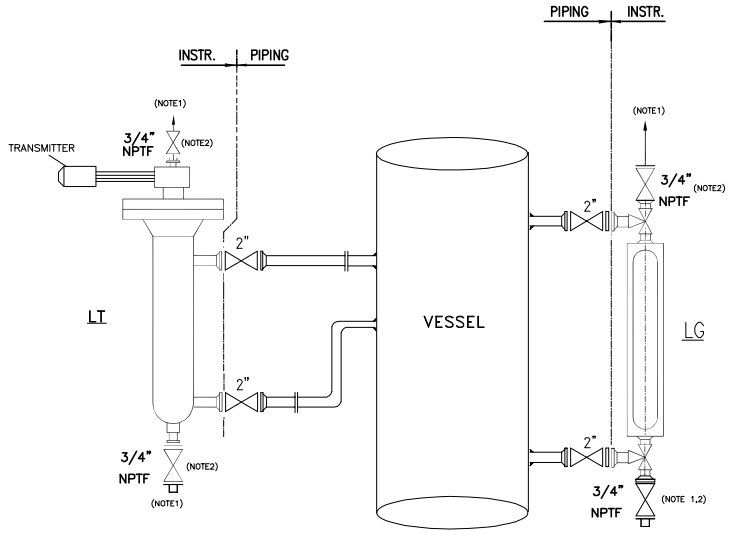

RATING FOR FLANGE ACCORDING TO INDIVIDUAL DATA SHEET
MINIMUM RATING FOR FLANGE SHALL BE 300#

NOTES:

1-SUITABLE CONNECTION TO OPEN DRAIN & VENT TO SAFE LOCATION TO BE CONSIDERED IN THIS PROJECT.
2-COCK VALVE, VENT & DRAIN VALVE, FLANGE GASKETS, BOLTS & NUTS BY INSTR. VENDOR.
3-FOR PIPING CONNECTION REFER TO PIPING ASSEMBLY DRAWING. DOC NO."BK-GCS-PEDCO-120-PI-DW-0002."

DESCRIPTION : DISPLACER LEVEL TRANS./LEVEL GAUGE-SIDE-SIDE (DIRECT CONNECTION)

CODE	DESCRIPTION	SIZE	MATERIAL	UNIT QTY	QTY	TOTAL QTY	UNIT	REMARK

NISOC	پروژه نگهداشت و افزایش تولید میدان نفتی بینک سطح‌الارض احداث ردیف تراکم گاز در ایستگاه جمع آوری بینک	PEDCO HIRGAN ENERGY

شماره پیمان:

053-073-9184

INSTRUMENT HOOK-UP DIAGRAM

پروژه	بسته کاری	صادرکننده	تسهیلات	رشته	نوع مدرک	سریال	نسخه
BK	GCS	PEDCO	120	IN	DG	0002	D01

شماره صفحه: 22 از 34

TAG NUMBERS
LT-2112
LT-2115
LT-2117
LT-2118
LT-2122A
LT-2122B
LT-2122C
LT-2132A
LT-2132B
LT-2132C
LT-2142
LT-2222
LT-2253
LT-2272
LT-2281

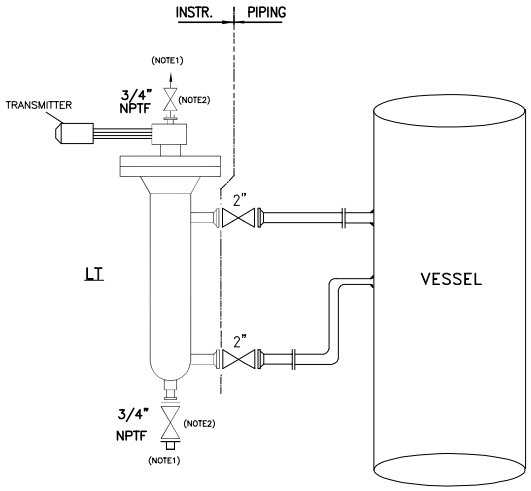

RATING FOR FLANGE ACCORDING TO INDIVIDUAL DATA SHEET
MINIMUM RATING FOR FLANGE SHALL BE 300#

NOTES:

1-SUITABLE CONNECTION TO OPEN DRAIN & VENT TO SAFE LOCATION TO BE CONSIDERED IN THIS PROJECT.
2-COCK VALVE, VENT & DRAIN VALVE, FLANGE GASKETS, BOLTS & NUTS BY INSTR. VENDOR.
3-FOR PIPING CONNECTION REFER TO PIPING ASSEMBLY DRAWING. DOC NO."BK-GCS-PEDCO-120-PI-DW-0002."

DESCRIPTION : DISPLACER LEVEL TRANS.(DIRECT CONNECTION)

CODE	DESCRIPTION	SIZE	MATERIAL	UNIT QTY	QTY	TOTAL QTY	UNIT	REMARK

NISOC	پروژه نگهداشت و افزایش تولید میدان نفتی بینک سطح‌الارض احداث ردیف تراکم گاز در ایستگاه جمع آوری بینک	PEDCO HIRGAN ENERGY

شماره پیمان:
053-073-9184

INSTRUMENT HOOK-UP DIAGRAM

پروژه	بسته کاری	صادرکننده	تسهیلات	رشته	نوع مدرک	سریال	نسخه
BK	GCS	PEDCO	120	IN	DG	0002	D01

شماره صفحه: 23 از 34

TAG NUMBERS
LG ONLY
LG-2201
LG-2211
LG-2281

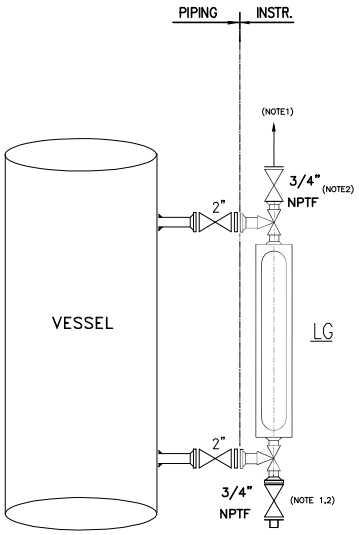

R LEVEL TRANS./LEVEL GAUGE-SIDE-SIDE (DIRECT CONNECTION)

RATING FOR FLANGE ACCORDING TO INDIVIDUAL DATA SHEET
MINIMUM RATING FOR FLANGE SHALL BE 300#

NOTES:

1-SUITABLE CONNECTION TO OPEN DRAIN & VENT TO SAFE LOCATION TO BE CONSIDERED IN THIS PROJECT.
2-COCK VALVE, VENT & DRAIN VALVE, FLANGE GASKETS, BOLTS & NUTS BY INSTR. VENDOR.
3-FOR PIPING CONNECTION REFER TO PIPING ASSEMBLY DRAWING. DOC NO."BK-GCS-PEDCO-120-PI-DW-0002."

DESCRIPTION : DISPLACER LEVEL TRANS.(DIRECT CONNECTION)

CODE	DESCRIPTION	SIZE	MATERIAL	UNIT QTY	QTY	TOTAL QTY	UNIT	REMARK

NISOC	پروژه نگهداشت و افزایش تولید میدان نفتی بینک سطح‌الارض احداث ردیف تراکم گاز در ایستگاه جمع آوری بینک	PEDCO HIRGAN ENERGY

شماره پیمان:
053-073-9184

INSTRUMENT HOOK-UP DIAGRAM

پروژه	بسته کاری	صادرکننده	تسهیلات	رشته	نوع مدرک	سریال	نسخه
BK	GCS	PEDCO	120	IN	DG	0002	D01

شماره صفحه: 24 از 34

TAG NUMBERS
LT-2291
LT-2293
LT-2223A
LT-2223B
LT-2273

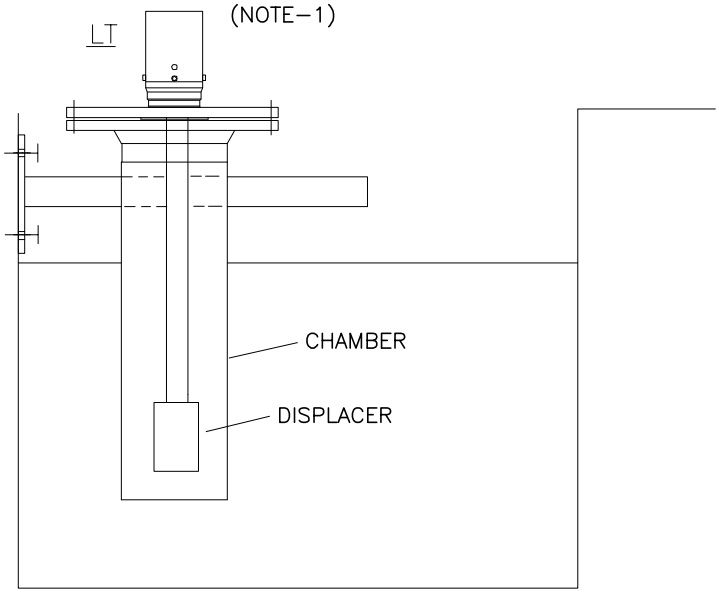

01

NOTE:
1- THERE IS NO CONNECTION WITH PIPING DEPARTMENT.
2- FOR INSTALLATION ACCESSORIES REFER TO DETAILS OF SUPPORT INSTALLATION BK-GCS-PEDCO-120-IN-DW-0001

DESCRIPTION : DISPLACER LEVEL TRANS. - TOP MOUNTED (INTERNAL)

CODE	DESCRIPTION	SIZE	MATERIAL	UNIT QTY	QTY	TOTAL QTY	UNIT	REMARK

NISOC	پروژه نگهداشت و افزایش تولید میدان نفتی بینک سطح‌الارض احداث ردیف تراکم گاز در ایستگاه جمع آوری بینک	PEDCO HIRGAN ENERGY

شماره پیمان:
053-073-9184

INSTRUMENT HOOK-UP DIAGRAM

پروژه	بسته کاری	صادرکننده	تسهیلات	رشته	نوع مدرک	سریال	نسخه
BK	GCS	PEDCO	120	IN	DG	0002	D01

شماره صفحه: 25 از 34

TAG NUMBERS
LT-2161
LT-2252A
LT-2252B
LT-2252C

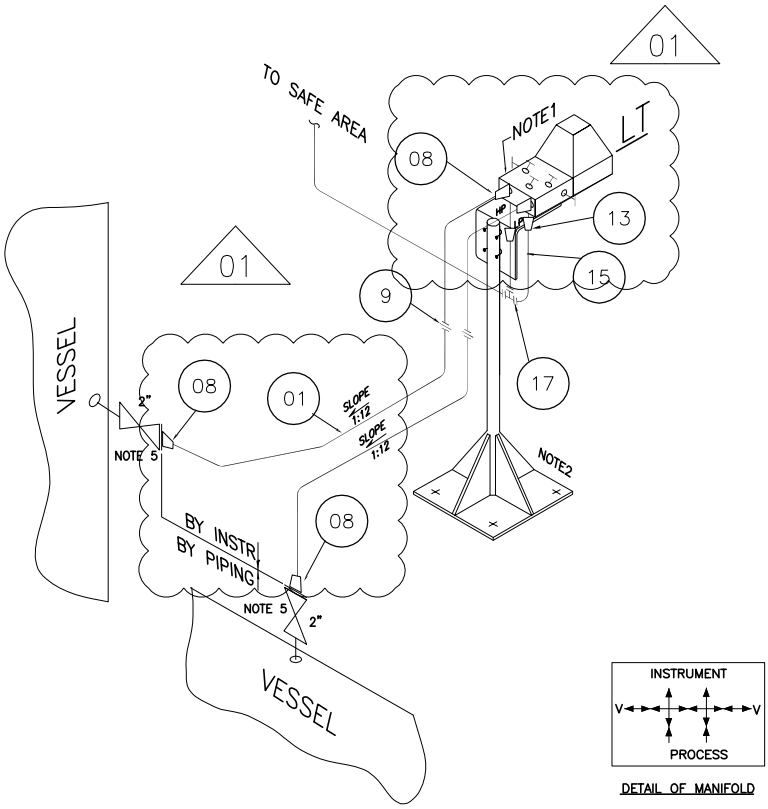

DETAIL OF MANIFOLD

NOTES:

1-(5) VALVES MANIFOLD WITH MOUNTING BRACKET, U-BOLTS AND NUTS ARE SUPPLIED BY VENDOR.
2-THIS SUPPORT IS TYPICAL. PLEASE REFER TO INSTALLATION DETAILS.
3-USE OF UNION SHALL BE AVOIDED WHEREVER POSSIBLE.
4-MANIFOLD SHALL BE SUITABLE FOR CONNECT TO TRANSMITTER.
5-BLIND FLANGE WITH 1/2" NPT TAPPING, BOLTS & NUTS BY PIPING.

01

DESCRIPTION : DIFF. PRESSURE LEVEL TRANSMITTER(VESSEL MOUNTED)

CODE	DESCRIPTION	SIZE	MATERIAL	UNIT QTY	QTY	TOTAL QTY	UNIT	REMARK
1	TUBING, SEAMLESS, WALL THICKNESS 0.065"	1/2"O.D	AISI 316L SS	10	4	40	M	
07	DOUBLE FERRULE COMPRESSION TYPE MALE CONNECTOR	1/2"NPTMx1/4"O.D	AISI 316L SS	2	4	8	PIECES	-
09	STRAIGHT UNION COMPRESSION TYPE DOUBLE FERRULE	1/2"O.D	AISI 316L SS	2	4	8	PIECES	-
15	TUBING, SEAMLESS, WALL THICKNESS 0.049"	1/4"O.D.	AISI 316L SS	0.40	4	1.6000	M	-
17	TUBE CAP	1/4"O.D.	AISI 316L SS	2	4	8	PIECES	-
21	5 - WAY VALVE MANIFOLD	2 X ½" + ¼"	AISI 316L SS	1	4	4	PIECES	-

NISOC	پروژه نگهداشت و افزایش تولید میدان نفتی بینک سطح‌الارض احداث ردیف تراکم گاز در ایستگاه جمع آوری بینک	PEDCO HIRGAN ENERGY

شماره پیمان:

053-073-9184

INSTRUMENT HOOK-UP DIAGRAM

پروژه	بسته کاری	صادرکننده	تسهیلات	رشته	نوع مدرک	سریال	نسخه
BK	GCS	PEDCO	120	IN	DG	0002	D01

شماره صفحه: 26 از 34

TAG NUMBERS
LG-2162
LT-2162

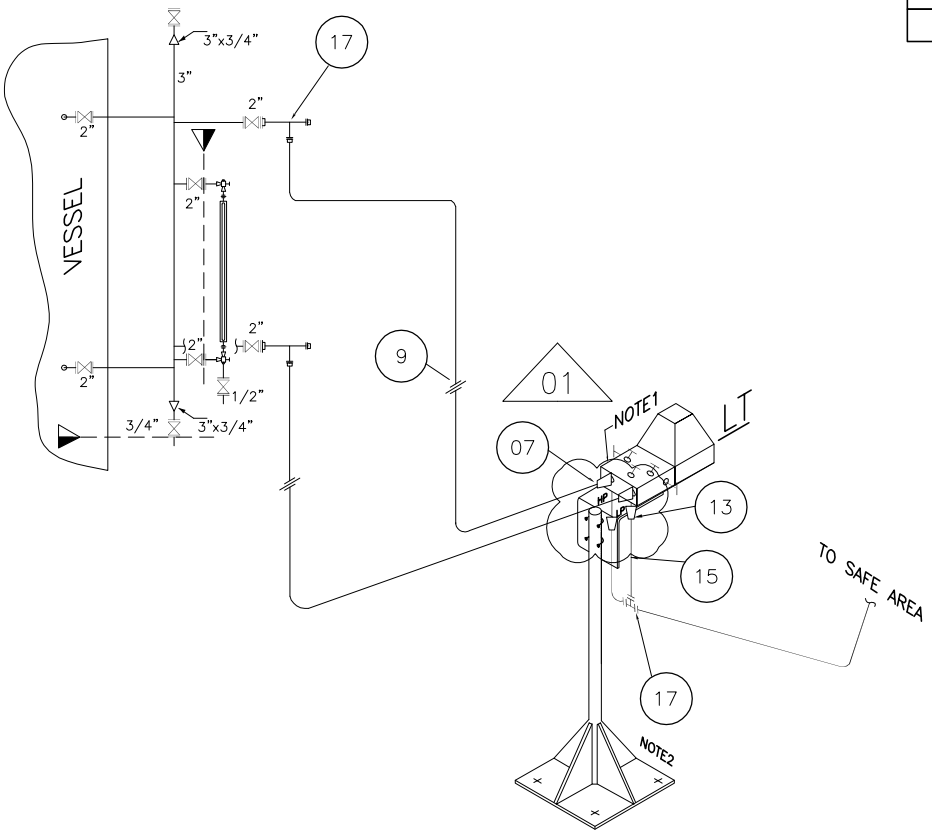

NOTES:

1-(5) VALVES MANIFOLD WITH MOUNTING BRACKET, U-BOLTS AND NUTS ARE SUPPLIED BY VENDOR.
2-THIS SUPPORT IS TYPICAL. PLEASE REFER TO INSTALLATION DETAILS.
3-USE OF UNION SHALL BE AVOIDED WHEREVER POSSIBLE.
4-MANIFOLD SHALL BE SUITABLE FOR CONNECT TO TRANSMITTER.
5-BLIND FLANGE WITH 1/2" NPT TAPPING, BOLTS & NUTS BY PIPING.

01

DESCRIPTION : DIFF. PRESSURE LEVEL TRANSMITTER(VESSEL MOUNTED)

CODE	DESCRIPTION	SIZE	MATERIAL	UNIT QTY	QTY	TOTAL QTY	UNIT	REMARK
1	TUBING, SEAMLESS, WALL THICKNESS 0.065"	1/2"O.D	AISI 316L SS	10	2	20	M	
07	DOUBLE FERRULE COMPRESSION TYPE MALE CONNECTOR	1/2"NPTMx1/4"O.D	AISI 316L SS	2	2	4	PIECES	-
09	STRAIGHT UNION COMPRESSION TYPE DOUBLE FERRULE	1/2"O.D	AISI 316L SS	2	2	4	PIECES	-
15	TUBING, SEAMLESS, WALL THICKNESS 0.049"	1/4"O.D.	AISI 316L SS	0.40	2	0.8000	M	-
17	TUBE CAP	1/4"O.D.	AISI 316L SS	2	2	4	PIECES	-
21	5 - WAY VALVE MANIFOLD	2 X ½" + ¼"	AISI 316L SS	1	2	2	PIECES	-

NISOC	پروژه نگهداشت و افزایش تولید میدان نفتی بینک سطح‌الارض احداث ردیف تراکم گاز در ایستگاه جمع آوری بینک	PEDCO HIRGAN ENERGY

شماره پیمان:
053-073-9184

INSTRUMENT HOOK-UP DIAGRAM

پروژه	بسته کاری	صادرکننده	تسهیلات	رشته	نوع مدرک	سریال	نسخه
BK	GCS	PEDCO	120	IN	DG	0002	D01

شماره صفحه: 27 از 34

TAG NUMBERS	TAG NUMBERS
TG-2141	TG-2111
TG-2142	TG-2112A
TG-2161	TG-2112B
TG-2221	TG-2113
TG-2251	TG-2114
	TG-2121A
	TG-2121B
	TG-2121C
	TG-2122A
	TG-2123A
	TG-2122B
	TG-2123B
	TG-2122C
	TG-2123C
	TG-2124A
	TG-2124B
	TG-2124C
	TG-2131A
	TG-2131B
	TG-2131C
	TG-2132A
	TG-2133A
	TG-2132B
	TG-2133B
	TG-2132C
	TG-2133C
	TG-2134A
	TG-2134B
	TG-2134C

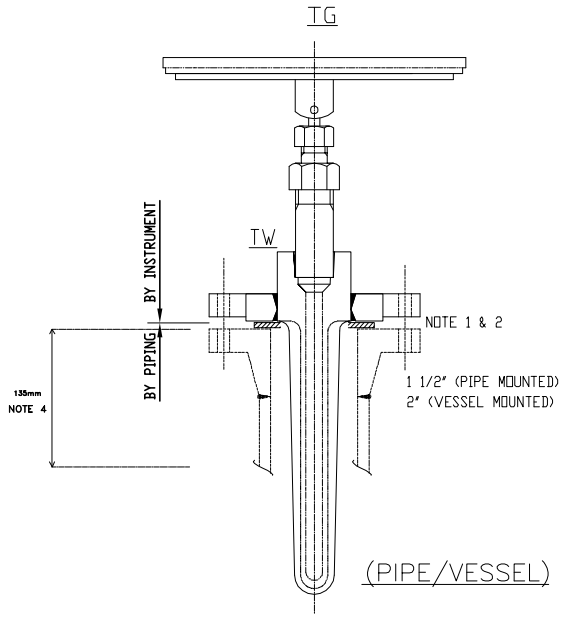

RATING FOR FLANGE ACCORDING TO INDIVIDUAL DATA SHEET.
MINIMUM RATING FOR FLANGE SHALL BE 300#

NOTES:

1-FLANGE, GASKET, BOLTS & NUTS BY PIPING.
2-THERMOWELL SUPPLIED BY INSTRUMENT VENDOR, INSTALLED BY PIPING SUB-CONTR.
3-INSTALLATION SHALL BE ACCORDANCE WITH IPS-C-IN-120 (LINE SIZE SHALL BE EXPANDED TO 4")
4-DISTANCE FROM TOP OF PIPE TO FLANGE FACE FOR PIPE MOUNTED TGs ONLY.
5-TEMPERATURE GAUGE TO BE EVERY ANGLE TYPE.

DESCRIPTION : TEMPERATURE GAUGE

CODE	*DESCRIPTION*	*SIZE*	*MATERIAL*	*UNIT QTY*	*QTY*	*TOTAL QTY*	*UNIT*	*REMARK*

NISOC	پروژه نگهداشت و افزایش تولید میدان نفتی بینک سطح‌الارض احداث ردیف تراکم گاز در ایستگاه جمع آوری بینک	PEDCO HIRGAN ENERGY

شماره پیمان:

053-073-9184

INSTRUMENT HOOK-UP DIAGRAM

پروژه	بسته کاری	صادرکننده	تسهیلات	رشته	نوع مدرک	سریال	نسخه
BK	GCS	PEDCO	120	IN	DG	0002	D01

شماره صفحه: 28 از 34

TAG NUMBERS
TIT-2102
TIT-2103
TIT-2104
TIT-2111
TIT-2112
TIT-2121A
TIT-2124A
TIT-2121B
TIT-2124B
TIT-2121C
TIT-2124C
TIT-2125A
TIT-2126A
TIT-2125B
TIT-2126B
TIT-2125C
TIT-2126C
TIT-2131A
TIT-2134A
TIT-2131B
TIT-2134B
TIT-2131C
TIT-2134C
TIT-2135A
TIT-2136A
TIT-2135B
TIT-2136B
TIT-2135C
TIT-2136C

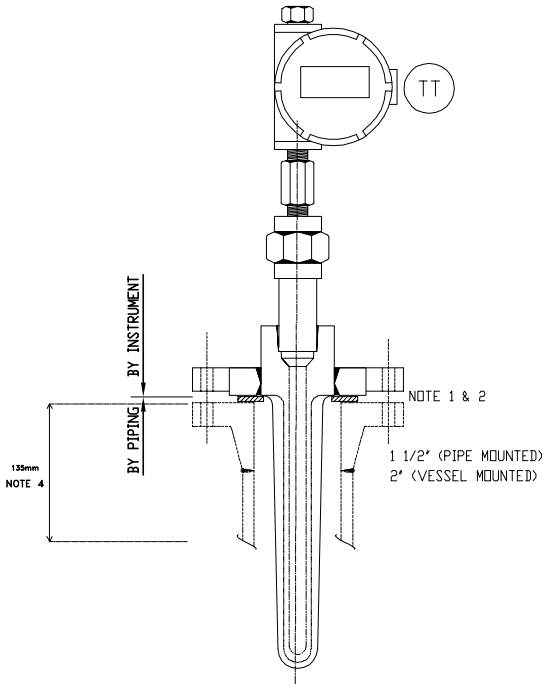

RATING FOR FLANGE ACCORDING TO INDIVIDUAL DATA SHEET.
MINIMUM RATING FOR FLANGE SHALL BE 300#

NOTES:

1-FLANGE, GASKET, BOLTS & NUTS BY PIPING.
2-THERMOWELL SUPPLIED BY INSTRUMENT VENDOR, INSTALLED BY PIPING SUB-CONTR.
3-INSTALLATION SHALL BE ACCORDANCE WITH IPS-C-IN-120 (line size shall be expanded to 4")
4-DISTANCE FROM TOP OF PIPE TO FLANGE FACE FOR PIPE MOUNTED INSTRUMENT ONLY.
5-FOR PIPING CONNECTION REFER TO PIPING ASSEMBLY DRAWING. DOC NO."BK-GCS-PEDCO-120-PI-DW-0002."

DESCRIPTION : TEMPERATURE TEMPERATURE

CODE	DESCRIPTION	SIZE	MATERIAL	UNIT QTY	QTY	TOTAL QTY	UNIT	REMARK

NISOC	پروژه نگهداشت و افزایش تولید میدان نفتی بینک سطح‌الارض احداث ردیف تراکم گاز در ایستگاه جمع آوری بینک	PEDCO HIRGAN ENERGY

شماره پیمان:
053-073-9184

INSTRUMENT HOOK-UP DIAGRAM

پروژه	بسته کاری	صادرکننده	تسهیلات	رشته	نوع مدرک	سریال	نسخه
BK	GCS	PEDCO	120	IN	DG	0002	D01

شماره صفحه: 29 از 34

TAG NUMBERS
FCV-2101
FCV-2102
LCV-2111
FCV-2112A
FCV-2112B
FCV-2111
LCV-2114
PCV-2123A
PCV-2123B
PCV-2123C
PCV-2134A
PCV-2134B
PCV-2134C
PCV-2151
PCV-2152
PCV-2201
PCV-2171A
PCV-2171B
PCV-2052

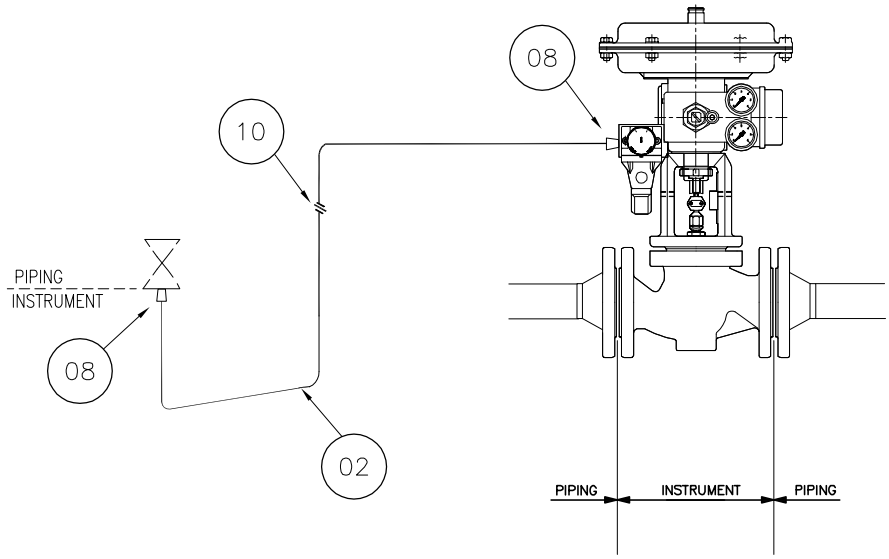

RATING FOR FLANGE ACCORDING TO INDIVIDUAL DATA SHEET.
MINIMUM RATING FOR FLANGE SHALL BE 300#

NOTES:
1-FLANGE, GASKET, BOLTS & NUTS BY PIPING.

01

DESCRIPTION : CONTROL VALVE

CODE	DESCRIPTION	SIZE	MATERIAL	UNIT QTY	QTY	TOTAL QTY	UNIT	REMARK
02	TUBING, SEAMLESS, WALL THICKNESS 0.065"	½" O.D.	AISI 316L SS	5	19	95	M	
08	DOUBLE FERRULE COMPRESSION TYPE MALE CONNECTOR	1/2"NPTMx1/2"O.D	AISI 316L SS	2	19	38	PIECES	
10	STRAIGHT UNION COMPRESSION TYPE DOUBLE FERRULE	½" O.D.	AISI 316L SS	1	19	19	PIECES	

NISOC	پروژه نگهداشت و افزایش تولید میدان نفتی بینک سطح‌الارض احداث ردیف تراکم گاز در ایستگاه جمع آوری بینک	PEDCO HIRGAN ENERGY

شماره پیمان:
053-073-9184

INSTRUMENT HOOK-UP DIAGRAM

پروژه	بسته کاری	صادرکننده	تسهیلات	رشته	نوع مدرک	سریال	نسخه
BK	GCS	PEDCO	120	IN	DG	0002	D01

شماره صفحه: 30 از 34

TAG NUMBERS
ESDV-2101
ESDV-2102
ESDV-2111
ESDV-2112
ESDV-2113
XV-2110
XV-2121A
XV-2122A
XV-2121B
XV-2122B
XV-2121C
XV-2122C
XV-2131A
XV-2131B
XV-2131C
XV-2133A
BDV-2132A
XV-2133B
BDV-2132B
XV-2133C
BDV-2132C
XV-2141
XV-2142
ESDV-2143
BDV-2141
BDV-2151
ESDV-2231
ESDV-2272
XV-2271

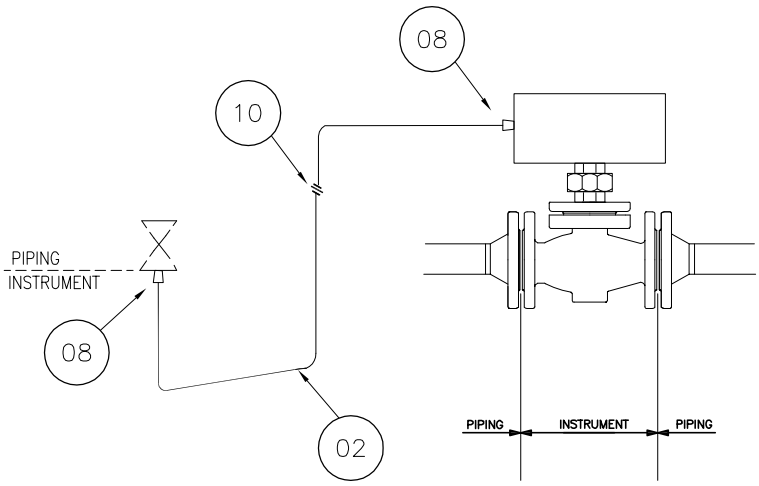

RATING FOR FLANGE ACCORDING TO INDIVIDUAL DATA SHEET.
MINIMUM RATING FOR FLANGE SHALL BE 300#
FOR AIR HOOK UP REFER TO "Instrument Air Piping and Air Header Diagram For New Gas Compressor Station", DOC NO. MIAS-06-HE-120-IN-DG-0007.

NOTES:

1-FLANGE, GASKET, BOLTS & NUTS BY PIPING.

01

DESCRIPTION : ON/OFF VALVE

CODE	DESCRIPTION	SIZE	MATERIAL	UNIT QTY	QTY	TOTAL QTY	UNIT	REMARK
02	TUBING, SEAMLESS, WALL THICKNESS 0.065"	½" O.D.	AISI 316L SS	5	29	145	M	
08	DOUBLE FERRULE COMPRESSION TYPE MALE CONNECTOR	1/2"NPTMx1/2"O.D	AISI 316L SS	2	29	58	PIECES	
10	STRAIGHT UNION COMPRESSION TYPE DOUBLE FERRULE	½" O.D.	AISI 316L SS	1	29	29	PIECES	

NISOC	پروژه نگهداشت و افزایش تولید میدان نفتی بینک سطح‌الارض احداث ردیف تراکم گاز در ایستگاه جمع آوری بینک	PEDCO HIRGAN ENERGY

شماره پیمان:
053-073-9184

INSTRUMENT HOOK-UP DIAGRAM

پروژه	بسته کاری	صادرکننده	تسهیلات	رشته	نوع مدرک	سریال	نسخه
BK	GCS	PEDCO	120	IN	DG	0002	D01

شماره صفحه: 31 از 34

TAG NUMBERS
PSV-2111
PSV-2112
PSV-2113
PSV-2114
PSV-2121A
PSV-2121B
PSV-2121C
PSV-2122A
PSV-2123A
PSV-2122B
PSV-2123B
PSV-2122C
PSV-2123C
PSV-2131A
PSV-2131B
PSV-2131C
PSV-2132A
PSV-2133A
PSV-2132B
PSV-2133B
PSV-2132C
PSV-2133C
PSV-2141
PSV-2142
PSV-2161
PSV-2201A
PSV-2201B
PSV-2211A
PSV-2211B
PSV-2251A
PSV-2251B

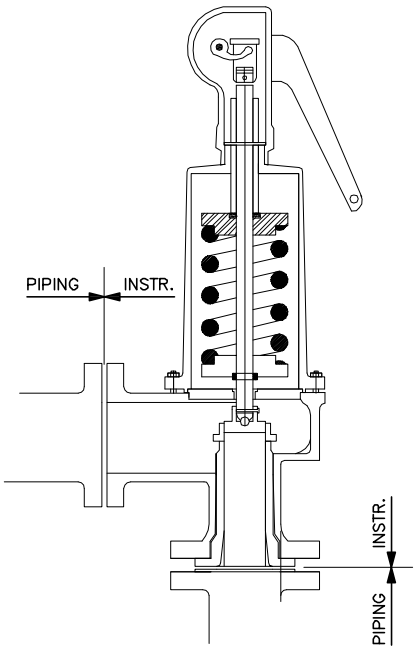

RATING FOR FLANGE ACCORDING TO INDIVIDUAL DATA SHEET.

NOTES:
1-FLANGE, GASKET, BOLTS & NUTS BY PIPING.

DESCRIPTION : SAFETY & RELIEF VALVE

CODE	*DESCRIPTION*	*SIZE*	*MATERIAL*	*UNIT QTY*	*QTY*	*TOTAL QTY*	*UNIT*	*REMARK*

NISOC	پروژه نگهداشت و افزایش تولید میدان نفتی بینک سطح‌الارض احداث ردیف تراکم گاز در ایستگاه جمع آوری بینک	PEDCO HIRGAN ENERGY

شماره پیمان:
053-073-9184

INSTRUMENT HOOK-UP DIAGRAM

پروژه	بسته کاری	صادرکننده	تسهیلات	رشته	نوع مدرک	سریال	نسخه
BK	GCS	PEDCO	120	IN	DG	0002	D01

شماره صفحه: 32 از 34

TAG NUMBERS
CC-2101
CC-2102
CC-2111
CC-2112
CC-2141
CC-2271

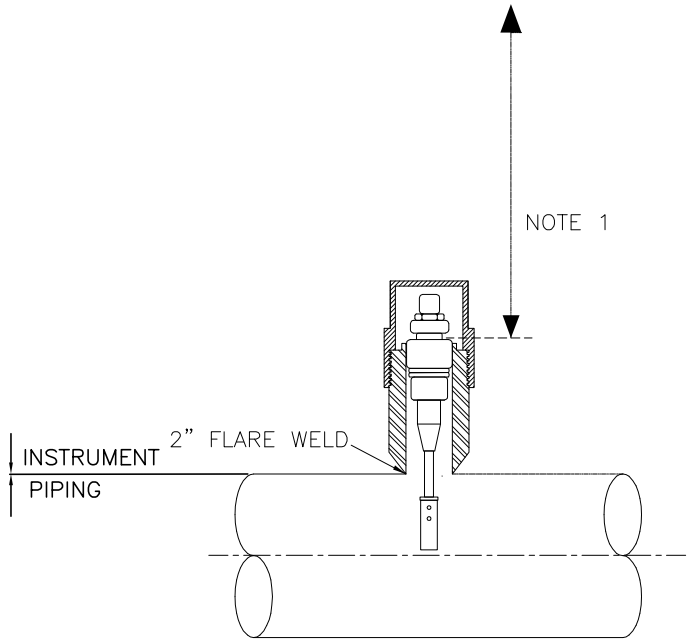

NOTES:

1-DETAILS TO BE FINALIZED AS PER VENDOR DATA.
2-DETAILS SHALL BE DETERMINED BY PIPING.
3-FREE SPACE FOR REMOVAL OF ACCESS FITTING AND RETRIEVAL SYSTEM TO BE CONSIDERED.

DESCRIPTION : CORROSION COUPON (INSTALLATION IN 12'O CLOCK)(GAS SERVICE)

CODE	DESCRIPTION	SIZE	MATERIAL	UNIT QTY	QTY	TOTAL QTY	UNIT	REMARK

NISOC	پروژه نگهداشت و افزایش تولید میدان نفتی بینک سطح‌الارض احداث ردیف تراکم گاز در ایستگاه جمع آوری بینک	PEDCO HIRGAN ENERGY

شماره پیمان:
053-073-9184

INSTRUMENT HOOK-UP DIAGRAM

پروژه	بسته کاری	صادرکننده	تسهیلات	رشته	نوع مدرک	سریال	نسخه
BK	GCS	PEDCO	120	IN	DG	0002	D01

شماره صفحه: 33 از 34

TAG NUMBERS
CP-2101
CP-2102
CP-2111
CP-2112
CP-2141
CP-2271

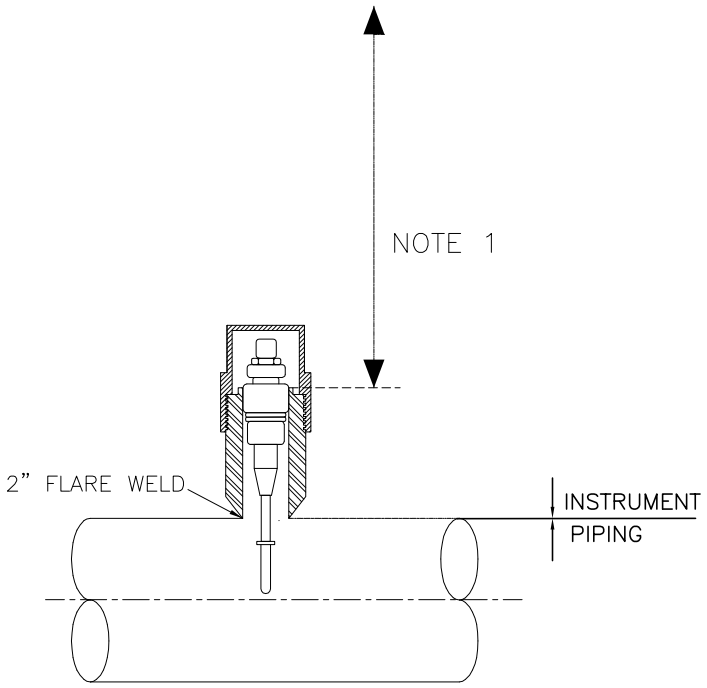

DESCRIPTION : CORROSION PROBE/TRANSMITTER (INSTALLATION IN 12'O CLOCK) (GAS SERVICE)

NOTES:

1-DETAILS TO BE FINALIZED AS PER VENDOR DATA.
2-DETAILS SHALL BE DETERMINED BY PIPING.
3-FREE SPACE FOR REMOVAL OF ACCESS FITTING AND RETRIEVAL SYSTEM TO BE CONSIDERED.

DESCRIPTION : CORROSION PROBE/TRANSMITTER (INSTALLATION IN 12'O CLOCK) (GAS SERVICE)

CODE	DESCRIPTION	SIZE	MATERIAL	UNIT QTY	QTY	TOTAL QTY	UNIT	REMARK

NISOC	پروژه نگهداشت و افزایش تولید میدان نفتی بینک سطح‌الارض احداث ردیف تراکم گاز در ایستگاه جمع آوری بینک	PEDCO HIRGAN ENERGY

شماره پیمان:

053-073-9184

INSTRUMENT HOOK-UP DIAGRAM

پروژه	بسته کاری	صادرکننده	تسهیلات	رشته	نوع مدرک	سریال	نسخه
BK	GCS	PEDCO	120	IN	DG	0002	D01

شماره صفحه: 34 از 34

TAG NUMBERS
FG-2101
FG-2102
FG-2111
FG-2132A
FG-2132B
FG-2132C
FG-2142
FG-2141
FG-2271
FG-2301

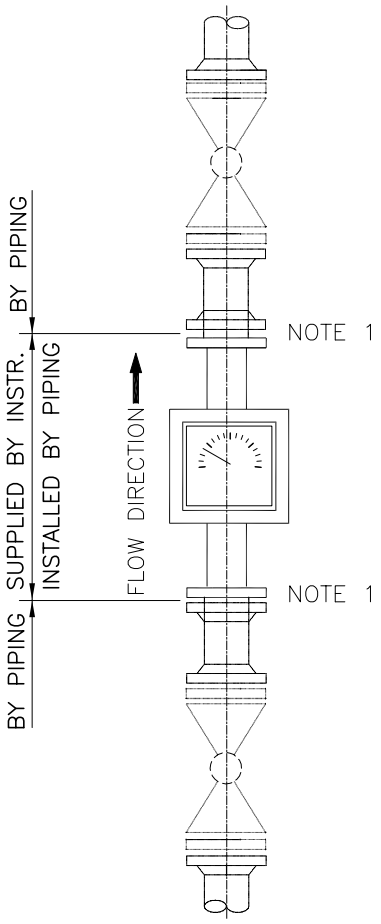

NOTES:

1-GASKET, BOLTS AND NUTS SHALL BE PROVIDED BY PIPING (IF REQUIRED).

2-FOR PIPING CONNECTION REFER TO PIPING ASSEMBLY DRAWING.
DOC NO."BK-GCS-PEDCO-120-PI-DW-0002."

DESCRIPTION : ROTAMETER

CODE	DESCRIPTION	SIZE	MATERIAL	UNIT QTY	QTY	TOTAL QTY	UNIT	REMARK