ELECTRICAL TYPICAL SCHEMATIC DIAGRAMS FOR LV PANEL

NOTES

LEGEND

REFERENCE DRAWING	DRG. No.
LV SWITCHGEAR/MCC SINGLE LINE DIAGRAM	BK-GCS-PEDCO-120-EL-SL-0002
CONTROL LOGIC DIAGRAM FOR LV INCOMERS & BUS TIE	BK-GCS-PEDCO-120-EL-LD-0001
ELECTRICAL OVERALL SINGLE LINE DIAGRAM	BK-GCS-PEDCO-120-EL-SL-0001

KEY PLAN

REV.	DATE	P.O.I.S	PREP.	CHK.	APP.	AUT.
D03	JUL.2022	IFI	M.SHAKERA	M.PAKNIAHRAN	M.MEHRERNAD	**.**
D02	MAY.2022	IFI	M.SHAKERA	M.PAKNIAHRAN	M.MEHRERNAD	**.**
D01	APR.2022	IFI	M.SHAKERA	M.PAKNIAHRAN	M.MEHRERNAD	**.**
D00	DEC.2021	IFI	M.SHAKERA	M.PAKNIAHRAN	M.MEHRERNAD	**.**

REV.	DESCRIPTION	CHECKED BY	CHECKED DATE	REV. APPR. BY	REV. APPR. DATE
***	**********	**.**	***.****	**.**	***.****

PROJECT NAME: BINAK OILFIELD DEVELOPMENT/SURFACE FACILITIES GAS COMPRESSOR STATION

PROJECT NO.: 971020

EPC CONTRACTOR: HIRGAN ENERGY – DESIGN & INSPECTION COMPANIES

EPD/EPC CONTRACTOR (DC): PEDCO — PETROIRAN DEVELOPMENT COMPANY

اصل و کلیه نسخ این نقشه و حق اقتباس متعلق به شرکت ملی مناطق نفت خیز جنوب میباشد.

THE ORIGINAL AND ALL COPIES OF THIS DRAWING TOGETHER WITH THE COPYRIGHT THEREIN ARE THE SOLE PROPERTY OF N.I.S.O.C./ FIELDS

BINAK OILFIELD DEVELOPMENT
SURFACE FACILITIES
GAS COMPRESSOR STATION

DATE	SCALE	DRAWING BY	CHECKED BY	PROJECT ENG.

(VENDOR TITLE BLOCK)**

DRAWING TITLE: ELECTRICAL TYPICAL SCHEMATIC DIAGRAMS FOR LV PANEL

NO CONSTRUCTION PERMITTED UNLESS DRAWING APPROVED

APPROVED FOR CONSTRUCTION BY: DATE:

SCALE	SIZE	DRAWING NO.	SHEET NO.	REV.	BUDGET REF.	LOCATION	SIZE	CLASS	SERIAL NO.	SHEET	REVISION
NTS	A3	BK-GCS-PEDCO-120-EL-DG-0002	01 OF 30	D03	063-073-9184	F	2	P	709041	01 OF 30	D03

INDEX SHEET

SHEET No.	DESCRIPTION	D00	D01	D02	D03	D04
01	COVER SHEET	✓	✓	✓	✓	
02	INDEX SHEET	✓	✓	✓	✓	
03	ABBREVIATION & NOTES	✓	✓	✓	✓	
04	SYMBOL & LEGEND (1/2)	✓	✓	✓	✓	
05	SYMBOL & LEGEND (2/2)	✓	✓	✓	✓	
06	F1: SIMPLE 4-POLE MCCB FEEDER WITH THERMAL/MAGNETIC TRIPS, FOR I<63A FEEDERS.	✓	✓	✓	✓	
07	F2: SIMPLE 4-POLE MCCB FEEDER WITH THERMAL/MAGNETIC TRIPS, FOR 63A=<I<100A FEEDERS.	✓	✓	✓	✓	
08	F3: SIMPLE 4-POLE MCCB FEEDER WITH THERMAL/MAGNETIC TRIPS, FOR 100A=<I FEEDERS.	✓	✓	✓	✓	
09	F4: SIMPLE 3-POLE MCCB FEEDER WITH THERMAL/MAGNETIC TRIPS, FOR I<63A FEEDERS.	✓	✓	✓	✓	
10	F5: SIMPLE 3-POLE MCCB FEEDER WITH THERMAL/MAGNETIC TRIPS, FOR 63A=<I<100A FEEDERS.	✓	✓	✓	✓	
11	F6: SIMPLE 3-POLE MCCB FEEDER WITH THERMAL/MAGNETIC TRIPS, FOR 100A=<I FEEDERS.	✓	✓	✓	✓	
12	F7: SIMPLE 2-POLE MCCB FEEDER FOR FEEDING SINGLE PHASE LOADS (PH+N OR 2-PH)	✓	✓	✓	✓	
13	M1: DIRECT ON LINE MOTOR STARTER FEEDERS FOR 0.4kW ≤ P < 4kW	✓	✓	✓	✓	
14	M2: DIRECT ON LINE MOTOR STARTER FEEDERS FOR 4kW ≤ P < 18.5kW	✓	✓	✓	✓	
15	M3: DIRECT ON LINE MOTOR STARTER FEEDERS FOR 18.5kW ≤ P < 30kW	✓	✓	✓	✓	
16	M4: DIRECT ON LINE MOTOR STARTER FEEDERS FOR 30kW ≤ P & AND HAZARDOUS AREA	✓	✓	✓	✓	
17	IN1: INCOMING 1 FROM DISTRIBUTION TRANSFORMER	✓	✓	✓	✓	
18	CO1: COUPLING 1	✓	✓	✓	✓	
19	IN2: INCOMING 2 FROM DISTRIBUTION TRANSFORMER	✓	✓	✓	✓	
20	CO2: COUPLING 2	✓	✓	✓	✓	
21	IN3: INCOMING FROM DIESEL GENERATOR	✓	✓	✓	✓	
22	INCOMING 1 (CB1)	✓	✓	✓	✓	
23	INCOMING 2 (CB2)	✓	✓	✓	✓	
24	COUPLING 1 (BT1)	✓	✓	✓	✓	
25	COUPLING 1 (BT1)	✓	✓	✓	✓	
26	COUPLING 1 (BT1)	✓	✓	✓	✓	
27	COUPLING 1 (BT1)	✓	✓	✓	✓	
28	COUPLING 2 (BT2)	✓	✓	✓	✓	
29	COUPLING 2 (BT2)	✓	✓	✓	✓	
30	INCOMING 3 (CB3)			✓	✓	

NOTES

LEGEND

REFERENCE DRAWING	DRG. No.
LV SWITCHGEAR/MCC SINGLE LINE DIAGRAM	BK-GCS-PEDCO-120-EL-SL-0002
CONTROL LOGIC DIAGRAM FOR LV INCOMERS & BUS TIE	BK-GCS-PEDCO-120-EL-LD-0001
ELECTRICAL OVERALL SINGLE LINE DIAGRAM	BK-GCS-PEDCO-120-EL-SL-0001

KEY PLAN

REV.	DATE	P.O.I.S	PREP.	CHK.	APP.	AUT.
D03	JUL.2022	IFI	M.SHAKERA	M.PAKNAHRAN	M.MEHRERNAD	**.**
D02	MAY.2022	IFI	M.SHAKERA	M.PAKNAHRAN	M.MEHRERNAD	**.**
D01	APR.2022	IFI	M.SHAKERA	M.PAKNAHRAN	M.MEHRERNAD	**.**
D00	DEC.2021	IFI	M.SHAKERA	M.PAKNAHRAN	M.MEHRERNAD	**.**

REV.	DESCRIPTION	BY	DATE	BY	DATE
***	**********	**.**	***.****	**.**	***.****
		CHECKED		REV. APPR.	

اصل و کلیه نسخ این نقشه و حق اقتباس متعلق به شرکت ملی مناطق نفت خیز جنوب میباشد.
THE ORIGINAL AND ALL COPIES OF THIS DRAWING TOGETHER WITH THE COPYRIGHT THEREIN ARE THE SOLE PROPERTY OF
N.I.S.O.C./ FIELDS

PROJECT NAME: BINAK OILFIELD DEVELOPMENT/SURFACE FACILITIES GAS COMPRESSOR STATION

PROJECT NO.: 971020

EPC CONTRACTOR: HIRGAN ENERGY – DESIGN & INSPECTION COMPANIES

EPD/EPC CONTRACTOR (GC): PETROIRAN DEVELOPMENT COMPANY — PEDCO

BINAK OILFIELD DEVELOPMENT
SURFACE FACILITIES
GAS COMPRESSOR STATION

DATE	SCALE	DRAWING BY	CHECKED BY	PROJECT ENG.

(VENDOR TITLE BLOCK)**

DRAWING TITLE: ELECTRICAL TYPICAL SCHEMATIC DIAGRAMS FOR LV PANEL

NO CONSTRUCTION PERMITTED UNLESS DRAWING APPROVED

APPROVED FOR CONSTRUCTION BY: DATE:

SCALE	SIZE	DRAWING NO.	SHEET NO.	REV.
NTS	A3	BK-GCS-PEDCO-120-EL-DG-0002	02 OF 30	D03

BUDGET REF.	LOCATION	SIZE	CLASS	SERIAL NO.	SHEET	REVISION
063-073-9184	F	2	P	709041	02 OF 30	D03

1 – ABBREVIATIONS

Q:	MAIN SWITCHING DEVICE
K1:	MAIN CONTACTOR
MPCB:	MOTOR PROTECTION CIRCUIT BREAKER
MCCB:	MOULDED CASE CIRCUIT BREAKER
MCB:	MINIATURE CIRCUIT BREAKER
KA:	AUXILIARY RELAY NO.#
TC:	TRIP COIL OF CIRCUIT BREAKER (SHUNT TRIP)
CB:	CIRCUIT BREAKER
CC:	CLOSE COMMAND
OC:	OPEN COMMAND
P/B:	PUSH BUTTON
PBC:	PUSH BUTTON CLOSE
MST:	MANUAL SYNCHRON TRANSFER
AT:	ATOUMATIC TRANSFER
DGCB:	DIESEL GENERATOR CIRCUIT BREAKER
ESD:	EMERGENCY SHUT DOWN
MOF:	MAKE ON FAULT
BOF:	BREAK ON FAULT
PE:	PROTECTING EARTH
SP:	SPRING CHARGED CONTACT
SP:	STOP P/B
ST:	START P/B
CBT:	COMMON CIRCUIT BREAKER TRIP
CBR:	COMMON CIRCUIT READY
CBF:	COMMON CIRCUIT FAULT
CCB:	CIRCUIT BREAKER CLOSING COIL
OCB:	CIRCUIT BREAKER OPENING COIL
DG:	DIESEL GENERATOR
BT:	BUS TIE
CF:	CIRCUIT BREAKER FAULT
CBR:	CIRCUIT BREAKER READY
MAT:	MANUAL ASYNCHRON TRANSFER
MT:	MANUAL TRANSFER
DGCP:	DIESEL GENERATOR CONTROL PANEL
LCS:	LOCAL CONTROL STATION
IRP:	INTERPOSING RELAY PANEL

2 – CATEGORY DESCRIPTION

- ALL SWITCH FUSES SHALL BE EQUIPPED WITH STRIKER PIN.
- LV NON MOTOR TYPE FEEDERS INCLUDE 400A & ABOVE SHALL BE ACB INSTEAD OF MCCB.
- START COMMAND FROM DCS & STOP COMMAND FROM ESD & DCS HAVE BEEN CONSIDERED FOR MOTOR TYPE FEEDER. IF THERE ARE NOT, THESE FACILITIES SHALL BE DELETED.
- CONTROL CIRCUIT VOLTAGE FOR INCOMINGS & COUPLERS IS 110 VDC WHICH WILL BE SUPPLIED BY NEW CHARGER SYSTEM INSTALLED IN SWITCHGEAR ROOM.
- CONTROL CIRCUIT VOLTAGE FOR OUTGOING IS 230 VAC WHICH WILL BE SUPPLIED FOR EACH LV CUBICLE. IN OTHER WORDS FOR EACH LV CUBICLE ONE ISOLATED DRY TYPE TRANSFORMER SHALL BE CONSIDERED BY VENDOR.
- EMERGENCY STOP & START PUSH BUTTON SHALL BE CONSIDERED ON INCOMINGS & BUS–TIES.
- HEATER/S IN EACH CUBICLE WILL BE PROTECTED BY A MINIATURE CIRCUIT BREAKER AND AN EARTH LEAKAGE PROTECTION DEVICE OR RESIDUAL CIRCUIT BREAKER OF 30MA SENSITIVITY,THE HEATERS WILL BE FED BY INTERNAL SUPPLY WITH REDUNDANCY CIRCUIT THAT FEEDING THE HEATERS IN ONE SECTION OF THE SWITCHGEAR WILL BE FED FROM THE OPPOSITE SECTION OF THE BUS BAR.
- SWITCH–FUSE COMBINATION UNITS SHALL COMPLY WITH SUITABLE FOR UNINTERRUPTED DUTY, UTILIZATION CATEGORY AC–23
- FOR FEEDER WITH TYPE M3&M4, CURRENT AND VOLTAGE FAULT SHALL BE CONSIDERED SEPARATELY BY VENDOR.
- MICROPROCESSOR TYPE PROTECTIVE RELAYS SHALL BE EQUIPPED WITH RS 485 TO SEND SIGNALS BY SERIAL LINK

NOTES

LEGEND

REFERENCE DRAWING	DRG. No.
LV SWITCHGEAR/MCC SINGLE LINE DIAGRAM	BK-GCS-PEDCO-120-EL-SL-0002
CONTROL LOGIC DIAGRAM FOR LV INCOMERS & BUS TIE	BK-GCS-PEDCO-120-EL-LD-0001
ELECTRICAL OVERALL SINGLE LINE DIAGRAM	BK-GCS-PEDCO-120-EL-SL-0001

KEY PLAN

REV.	DATE	P.O.I.S	PREP.	CHK.	APP.	AUT.
D03	JUL.2022	IFI	H.SHAKERA	M.PAKNIAHRAM	M.MEHRERNAD	**.**
D02	MAY.2022	IFI	H.SHAKERA	M.PAKNIAHRAM	M.MEHRERNAD	**.**
D01	APR.2022	IFI	H.SHAKERA	M.PAKNIAHRAM	M.MEHRERNAD	**.**
D00	DEC.2021	IFI	H.SHAKERA	M.PAKNIAHRAM	M.MEHRERNAD	**.**

REV.	DESCRIPTION	BY	DATE	BY	DATE
***	**********	**.**	***.****	**.**	***.****
		CHECKED		REV. APPR.	

اصل و کلیه نسخ این نقشه و حق اقتباس متعلق به شرکت ملی مناطق نفت خیز جنوب میباشد

THE ORIGINAL AND ALL COPIES OF THIS DRAWING TOGETHER WITH THE COPYRIGHT THEREIN ARE THE SOLE PROPERTY OF N.I.S.O.C./ FIELDS

PROJECT NAME: BINAK OILFIELD DEVELOPMENT/SURFACE FACILITIES GAS COMPRESSOR STATION

PROJECT NO.: 971020

EPC CONTRACTOR: HIRGAN ENERGY – DESIGN & INSPECTION COMPANIES

EPD/EPC CONTRACTOR (GC): PEDCO — PETROIRAN DEVELOPMENT COMPANY

BINAK OILFIELD DEVELOPMENT
SURFACE FACILITIES
GAS COMPRESSOR STATION

DATE	SCALE	DRAWING BY	CHECKED BY	PROJECT ENG.

(VENDOR TITLE BLOCK)**

DRAWING TITLE: ELECTRICAL TYPICAL SCHEMATIC DIAGRAMS FOR LV PANEL

NO CONSTRUCTION PERMITTED UNLESS DRAWING APPROVED

APPROVED FOR CONSTRUCTION BY: DATE:

SCALE	SIZE	DRAWING NO.	SHEET NO.	REV.	BUDGET REF.	LOCATION	SIZE	CLASS	SERIAL NO.	SHEET	REVISION
NTS	A3	BK-GCS-PEDCO-120-EL-DG-0002	03 OF 30	D03	063-073-9184	F	2	P	709041	03 OF 30	D03

SYMBOLS	DESCRIPTION	SYMBOLS	DESCRIPTION	SYMBOLS	DESCRIPTION
Q1 MCCB	MOULDED CASE CIRCUIT BREAKER(3 POLE) WITH OVERLOAD /OVER CURRENT RELAY(MCCB)	27	UNDER VOLTAGE RELAY	51G	INVERSE TIME EARTH FAULT RELAY
		47	PHASE SEQUENCE RELAY	47 49 50G	MOTOR PROTECTION RELAY D03
Q1 MCCB	MOULDED CASE CIRCUIT BREAKER(4 POLE) WITH OVERLOAD /OVER CURRENT RELAY(MCCB)	M	MOTOR		
		49	THERMAL OVER LOAD RELAY		
M Q1 ACB	MOTORIZED AIR CIRCUIT BREAKER(4 POLE) WITHOUT OVERLOAD /OVER CURRENT RELAY(ACB)	50	INSTANTANEOUS OVER CURRENT RELAY		
		51	INVERSE TIME OVER CURRENT RELAY		
M Q1 ACB Ig> Ig>>	MOTORIZED AIR CIRCUIT BREAKER(3 POLE) WITH OVERLOAD /OVER CURRENT & INSTANTANEOUS EARTH FAULT CURRENT RELAY TIME DELAY EARTH FAULT CURRENT RELAY	27	UNDER VOLTAGE RELAY		
		25	SYNCHRON CHECK RELAY		
OFF "D"	ELECTROMAGNETIC ACTUATOR RELEASE TIMED RELAY (ACTUATE INSTANTLY, RESETS AFTER # SECONDS)	64	RESTRICTED EARTH FAULT RELAY		
ON "D"	ELECTROMAGNETIC ACTUATOR PICK-UP TIMED RELAY (ACTUATE AFTER #SECONDS, RESETS INSTANTLY)	86	LOCKOUT RELAY		
	NO & NC CONTACT ON DELAY		SIGNAL LAMP (R:RED, G:GREEN, W:WHITE, Y:YELLOW)		
	EMERGENCY STOP		PROTECTION LOGIC SIGNAL MECHANICAL INTERCONNECTION		
ON #	DELAY ON BY # SECOND		OPERATING COIL OF ELECTROMAGNETIC ACTUATOR		
OFF #	DELAY OFF BY # SECOND		NORMALLY OPEN CONTACT		
	GLAND		BIMETAL		
	WITHDRAW	PH.C.	PHASE CONTROL RELAY		

NOTES

LEGEND

REFERENCE DRAWING	DRG. No.
LV SWITCHGEAR/MCC SINGLE LINE DIAGRAM	BK-GCS-PEDCO-120-EL-SL-0002
CONTROL LOGIC DIAGRAM FOR LV INCOMERS & BUS TIE	BK-GCS-PEDCO-120-EL-LD-0001
ELECTRICAL OVERALL SINGLE LINE DIAGRAM	BK-GCS-PEDCO-120-EL-SL-0001

KEY PLAN

REV.	DATE	P.O.I.S	PREP.	CHK.	APP.	AUT.
D03	JUL.2022	IFI	H.SHAKERI	M.PAKNIAHRAN	M.MEHREBRAD	**.**
D02	MAY.2022	IFI	H.SHAKERI	M.PAKNIAHRAN	M.MEHREBRAD	**.**
D01	APR.2022	IFI	H.SHAKERI	M.PAKNIAHRAN	M.MEHREBRAD	**.**
D00	DEC.2021	IFI	H.SHAKERI	M.PAKNIAHRAN	M.MEHREBRAD	**.**

REV.	DESCRIPTION	CHECKED BY	CHECKED DATE	REV. APPR. BY	REV. APPR. DATE
***	**********	**.**	***.****	**.**	***.****

PROJECT NAME: BINAK OILFIELD DEVELOPMENT/SURFACE FACILITIES GAS COMPRESSOR STATION

PROJECT NO.: 971020

EPC CONTRACTOR: HIRGAN ENERGY – DESIGN & INSPECTION COMPANIES

EPD/EPC CONTRACTOR (GC): PEDCO — PETROIRAN DEVELOPMENT COMPANY

اصل و کلیه نسخ این نقشه و حق اقتباس متعلق به شرکت ملی مناطق نفت خیز جنوب میباشد.
THE ORIGINAL AND ALL COPIES OF THIS DRAWING TOGETHER WITH THE COPYRIGHT THEREIN ARE THE SOLE PROPERTY OF N.I.S.O.C./ FIELDS

BINAK OILFIELD DEVELOPMENT SURFACE FACILITIES GAS COMPRESSOR STATION

DATE	SCALE	DRAWING BY	CHECKED BY	PROJECT ENG.

(VENDOR TITLE BLOCK)**

DRAWING TITLE: ELECTRICAL TYPICAL SCHEMATIC DIAGRAMS FOR LV PANEL

SCALE	SIZE	DRAWING NO.	SHEET NO.	REV.
NTS	A3	BK-GCS-PEDCO-120-EL-DG-0002	04 OF 30	D03

NO CONSTRUCTION PERMITTED UNLESS DRAWING APPROVED

APPROVED FOR CONSTRUCTION BY: DATE:

BUDGET REF.	LOCATION	SIZE	CLASS	SERIAL NO.	SHEET	REVISION
063-073-9184	F	2	P	709041	04 OF 30	D03

SYMBOLS	DESCRIPTION	SYMBOLS	DESCRIPTION
	PUSH BUTTON, NORMALLY OPEN CONTACT	V.S	VOLTAGE SELECTOR SWITCH
	PUSH BUTTON, NORMALLY CLOSE CONTACT	A.S	AMMETER SELECTOR SWITCH
	NORMALLY CLOSE CONTACT		SWITCHING DEVICE (GENERAL SYMBOL)
L	LAMP (FOR LIGHTING)		
	SOCKET	d	CONTACTOR (CONTACT OPEN IN THE UNOPERATED POSITION)
	SPACE HEATER	&	AND LOGIC
	TRANSFORMER		OR LOGIC
			NOT LOGIC
	INDUCTOR, REACTOR, SPRING		FUSE GENERAL SYMBOL
	CURRENT TRANSFORMER	x	MINIATURE CIRCUIT BREAKER (MCB)
* / I	TRANSDUCER 4-20mA I: CURRENT V: VOLTAGE P: ACTIVE POWER Q: REACTIVE POWER		TERMINALS OF SWITCHGEAR
		V	VOLTMETER
	EARTH	A	AMMETER

NOTES

LEGEND

REFERENCE DRAWING	DRG. No.
LV SWITCHGEAR/MCC SINGLE LINE DIAGRAM	BK-GCS-PEDCO-120-EL-SL-0002
CONTROL LOGIC DIAGRAM FOR LV INCOMERS & BUS TIE	BK-GCS-PEDCO-120-EL-LD-0001
ELECTRICAL OVERALL SINGLE LINE DIAGRAM	BK-GCS-PEDCO-120-EL-SL-0001

KEY PLAN

REV.	DATE	P.O.I.S	PREP.	CHK.	APP.	AUT.
D03	JUL.2022	IFI	H.SHAKERI	M.PAKNIAHRAN	M.MEHREMAD	**.**
D02	MAY.2022	IFI	H.SHAKERI	M.PAKNIAHRAN	M.MEHREMAD	**.**
D01	APR.2022	IFI	H.SHAKERI	M.PAKNIAHRAN	M.MEHREMAD	**.**
D00	DEC.2021	IFI	H.SHAKERI	M.PAKNIAHRAN	M.MEHREMAD	**.**

REV.	DESCRIPTION	CHECKED BY	CHECKED DATE	REV. APPR. BY	REV. APPR. DATE
***	**********	**.**	***.****	**.**	***.****

PROJECT NAME: BINAK OILFIELD DEVELOPMENT/SURFACE FACILITIES GAS COMPRESSOR STATION

PROJECT NO.: 971020

EPC CONTRACTOR: HIRGAN ENERGY – DESIGN & INSPECTION COMPANIES

EPD/EPC CONTRACTOR (GC): PEDCO — PETROIRAN DEVELOPMENT COMPANY

اصل و کلیه نسخ این نقشه و حق اقتباس متعلق به شرکت ملی مناطق نفت خیز جنوب میباشد.

THE ORIGINAL AND ALL COPIES OF THIS DRAWING TOGETHER WITH THE COPYRIGHT THEREIN ARE THE SOLE PROPERTY OF N.I.S.O.C./ FIELDS

BINAK OILFIELD DEVELOPMENT SURFACE FACILITIES GAS COMPRESSOR STATION

DATE	SCALE	DRAWING BY	CHECKED BY	PROJECT ENG.

(VENDOR TITLE BLOCK)**

DRAWING TITLE: ELECTRICAL TYPICAL SCHEMATIC DIAGRAMS FOR LV PANEL

NO CONSTRUCTION PERMITTED UNLESS DRAWING APPROVED

APPROVED FOR CONSTRUCTION BY: DATE:

SCALE	SIZE	DRAWING NO.	SHEET NO.	REV.	BUDGET REF.	LOCATION	SIZE	CLASS	SERIAL NO.	SHEET	REVISION
NTS	A3	BK-GCS-PEDCO-120-EL-DG-0002	05 OF 30	D03	063-073-9184	F	2	P	709041	05 OF 30	D03

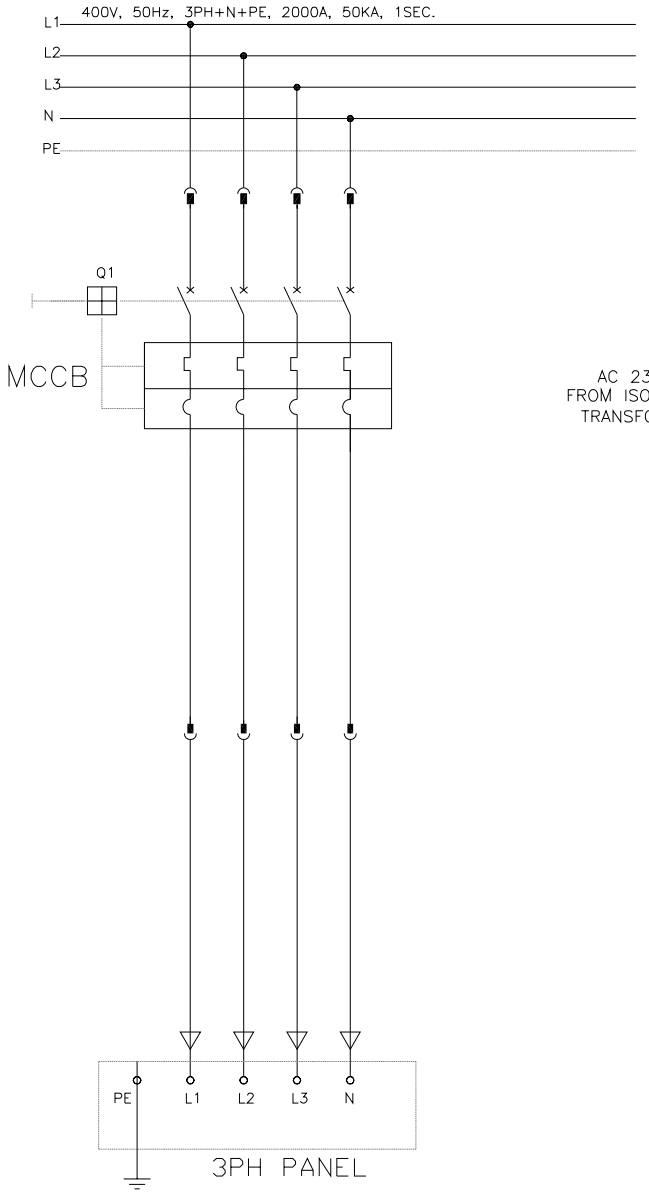

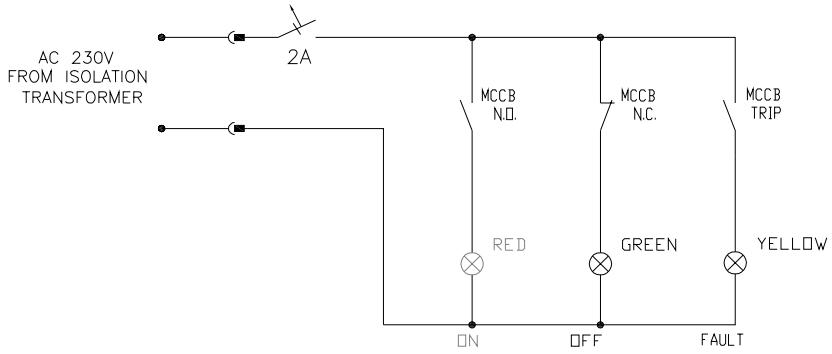

F1: SIMPLE 4-POLE MCCB FEEDER WITH THERMAL/MAGNETIC TRIPS, FOR I<63A FEEDERS.

NOTES

LEGEND

REFERENCE DRAWING	DRG. No.
LV SWITCHGEAR/MCC SINGLE LINE DIAGRAM	BK-GCS-PEDCO-120-EL-SL-0002
CONTROL LOGIC DIAGRAM FOR LV INCOMERS & BUS TIE	BK-GCS-PEDCO-120-EL-LD-0001
ELECTRICAL OVERALL SINGLE LINE DIAGRAM	BK-GCS-PEDCO-120-EL-SL-0001

KEY PLAN

REV.	DATE	P.O.I.S	PREP.	CHK.	APP.	AUT.
D03	JUL.2022	IFI	M.SHAKERI	M.PAKNIAIRAN	M.MEHRERNAD	**.**
D02	MAY.2022	IFI	M.SHAKERI	M.PAKNIAIRAN	M.MEHRERNAD	**.**
D01	APR.2022	IFI	M.SHAKERI	M.PAKNIAIRAN	M.MEHRERNAD	**.**
D00	DEC.2021	IFI	M.SHAKERI	M.PAKNIAIRAN	M.MEHRERNAD	**.**

REV.	DESCRIPTION	CHECKED BY	CHECKED DATE	REV. APPR. BY	REV. APPR. DATE
***	**********	**.**	***.****	**.**	***.****

PROJECT NAME: BINAK OILFIELD DEVELOPMENT/SURFACE FACILITIES GAS COMPRESSOR STATION

PROJECT NO.: 971020

EPC CONTRACTOR: HIRGAN ENERGY – DESIGN & INSPECTION COMPANIES

EPD/EPC CONTRACTOR (GC): PEDCO — PETROIRAN DEVELOPMENT COMPANY

اصل و کلیه نسخ این نقشه و حق اختراعی متعلق به شرکت ملی مناطق نفت خیز جنوب میباشد

THE ORIGINAL AND ALL COPIES OF THIS DRAWING TOGETHER WITH THE COPYRIGHT THEREIN ARE THE SOLE PROPERTY OF N.I.S.O.C./ FIELDS

BINAK OILFIELD DEVELOPMENT
SURFACE FACILITIES
GAS COMPRESSOR STATION

DATE	SCALE	DRAWING BY	CHECKED BY	PROJECT ENG.

(VENDOR TITLE BLOCK)**

DRAWING TITLE: ELECTRICAL TYPICAL SCHEMATIC DIAGRAMS FOR LV PANEL

NO CONSTRUCTION PERMITTED UNLESS DRAWING APPROVED

APPROVED FOR CONSTRUCTION BY: DATE:

SCALE	SIZE	DRAWING NO.	SHEET NO.	REV.
NTS	A3	BK-GCS-PEDCO-120-EL-DG-0002	06 OF 30	D03

BUDGET REF.	LOCATION	SIZE	CLASS	SERIAL NO.	SHEET	REVISION
063-073-9184	F	2	P	709041	06 OF 30	D03

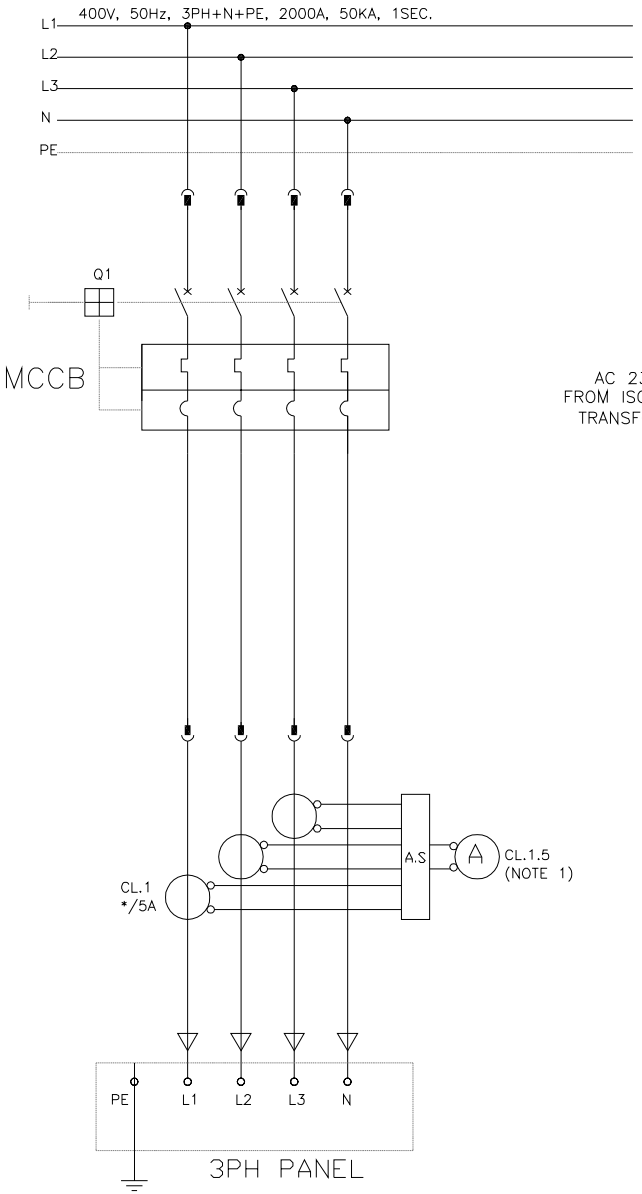

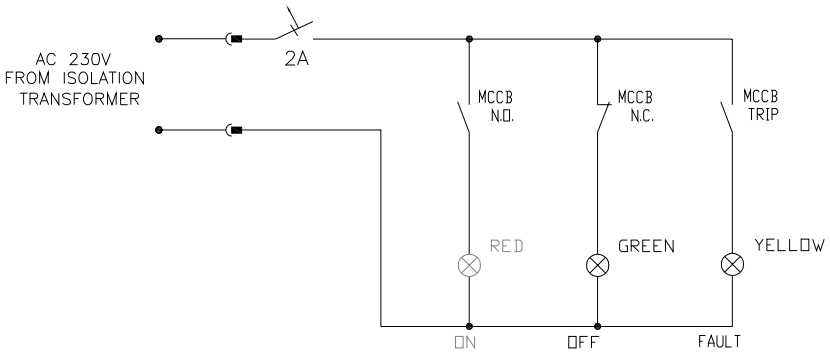

F2: SIMPLE 4-POLE MCCB FEEDER WITH THERMAL/MAGNETIC TRIPS, FOR 63A=<I<100A FEEDERS.

NOTES

LEGEND

REFERENCE DRAWING	DRG. No.
LV SWITCHGEAR/MCC SINGLE LINE DIAGRAM	BK-GCS-PEDCO-120-EL-SL-0002
CONTROL LOGIC DIAGRAM FOR LV INCOMERS & BUS TIE	BK-GCS-PEDCO-120-EL-LD-0001
ELECTRICAL OVERALL SINGLE LINE DIAGRAM	BK-GCS-PEDCO-120-EL-SL-0001

KEY PLAN

REV.	DATE	P.O.I.S	PREP.	CHK.	APP.	AUT.
D03	JUL.2022	IFI	M.SHAKERI	M.PAKNAHAN	M.MEHREMAD	**.**
D02	MAY.2022	IFI	M.SHAKERI	M.PAKNAHAN	M.MEHREMAD	**.**
D01	APR.2022	IFI	M.SHAKERI	M.PAKNAHAN	M.MEHREMAD	**.**
D00	DEC.2021	IFI	M.SHAKERI	M.PAKNAHAN	M.MEHREMAD	**.**

REV.	DESCRIPTION	CHECKED BY	CHECKED DATE	REV. APPR. BY	REV. APPR. DATE
***	**********	**.**	***.****	**.**	***.****

PROJECT NAME: BINAK OILFIELD DEVELOPMENT/SURFACE FACILITIES GAS COMPRESSOR STATION

PROJECT NO.: 971020

EPC CONTRACTOR: HIRGAN ENERGY – DESIGN & INSPECTION COMPANIES

EPD/EPC CONTRACTOR (GC): PEDCO — PETROIRAN DEVELOPMENT COMPANY

اصل و کلیه نسخ این نقشه و حق اقتباس متعلق به شرکت ملی مناطق نفت خیز جنوب میباشد.

THE ORIGINAL AND ALL COPIES OF THIS DRAWING TOGETHER WITH THE COPYRIGHT THEREIN ARE THE SOLE PROPERTY OF N.I.S.O.C./ FIELDS

BINAK OILFIELD DEVELOPMENT
SURFACE FACILITIES
GAS COMPRESSOR STATION

DATE	SCALE	DRAWING BY	CHECKED BY	PROJECT ENG.

(VENDOR TITLE BLOCK)**

DRAWING TITLE: ELECTRICAL TYPICAL SCHEMATIC DIAGRAMS FOR LV PANEL

NO CONSTRUCTION PERMITTED UNLESS DRAWING APPROVED

APPROVED FOR CONSTRUCTION BY: DATE:

SCALE	SIZE	DRAWING NO.	SHEET NO.	REV.
NTS	A3	BK-GCS-PEDCO-120-EL-DG-0002	07 OF 30	D03

BUDGET REF.	LOCATION	SIZE	CLASS	SERIAL NO.	SHEET	REVISION
063-073-9184	F	2	P	709041	07 OF 30	D03

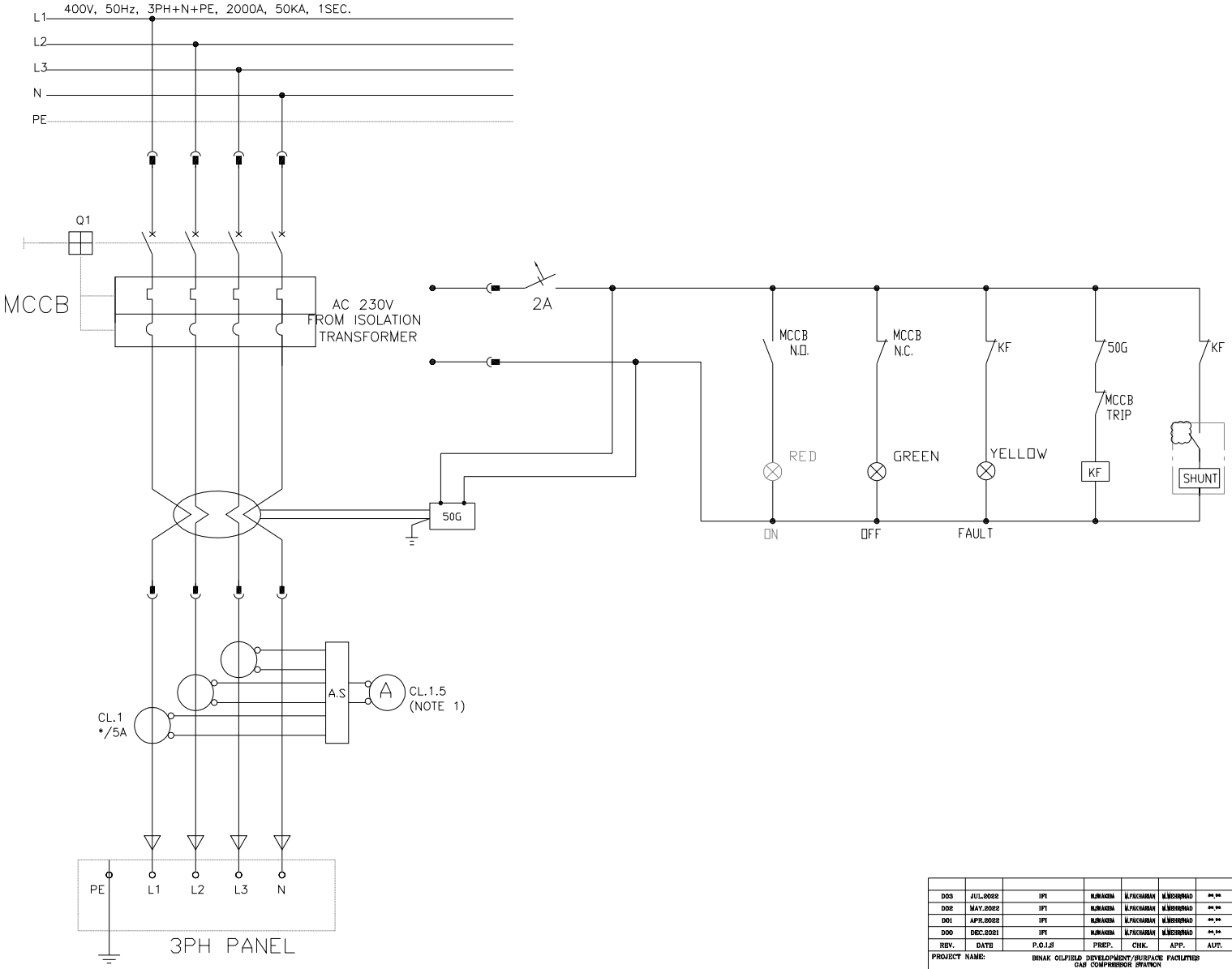

F3: SIMPLE 4-POLE MCCB FEEDER WITH THERMAL/MAGNETIC TRIPS, FOR 100A=<I FEEDERS.

NOTES

LEGEND

REFERENCE DRAWING	DRG. No.
LV SWITCHGEAR/MCC SINGLE LINE DIAGRAM	BK-GCS-PEDCO-120-EL-SL-0002
CONTROL LOGIC DIAGRAM FOR LV INCOMERS & BUS TIE	BK-GCS-PEDCO-120-EL-LD-0001
ELECTRICAL OVERALL SINGLE LINE DIAGRAM	BK-GCS-PEDCO-120-EL-SL-0001

KEY PLAN

REV.	DATE	P.O.I.S	PREP.	CHK.	APP.	AUT.
D03	JUL.2022	IFI	M.SHAKERA	M.PAKNIAHRAN	M.MEHRERNAD	**.**
D02	MAY.2022	IFI	M.SHAKERA	M.PAKNIAHRAN	M.MEHRERNAD	**.**
D01	APR.2022	IFI	M.SHAKERA	M.PAKNIAHRAN	M.MEHRERNAD	**.**
D00	DEC.2021	IFI	M.SHAKERA	M.PAKNIAHRAN	M.MEHRERNAD	**.**

REV.	DESCRIPTION	CHECKED BY	CHECKED DATE	REV. APPR. BY	REV. APPR. DATE
***	**********	**.**	***.****	**.**	***.****

PROJECT NAME: BINAK OILFIELD DEVELOPMENT/SURFACE FACILITIES GAS COMPRESSOR STATION

PROJECT NO.: 971020

EPC CONTRACTOR: HIRGAN ENERGY - DESIGN & INSPECTION COMPANIES

EPD/EPC CONTRACTOR (dC): PEDCO — PETROIRAN DEVELOPMENT COMPANY

اصل و کلیه نسخ این نقشه و حق اقتباس متعلق به شرکت ملی مناطق نفت خیز جنوب میباشد.

THE ORIGINAL AND ALL COPIES OF THIS DRAWING TOGETHER WITH THE COPYRIGHT THEREIN ARE THE SOLE PROPERTY OF N.I.S.O.C./ FIELDS

BINAK OILFIELD DEVELOPMENT
SURFACE FACILITIES
GAS COMPRESSOR STATION

DATE	SCALE	DRAWING BY	CHECKED BY	PROJECT ENG.

(VENDOR TITLE BLOCK)**

DRAWING TITLE: ELECTRICAL TYPICAL SCHEMATIC DIAGRAMS FOR LV PANEL

NO CONSTRUCTION PERMITTED UNLESS DRAWING APPROVED

APPROVED FOR CONSTRUCTION BY: DATE:

SCALE	SIZE	DRAWING NO.	SHEET NO.	REV.
NTS	A3	BK-GCS-PEDCO-120-EL-DG-0002	06 OF 30	D03

BUDGET REF.	LOCATION	SIZE	CLASS	SERIAL NO.	SHEET	REVISION
063-073-9184	F	2	P	709041	06 OF 30	D03

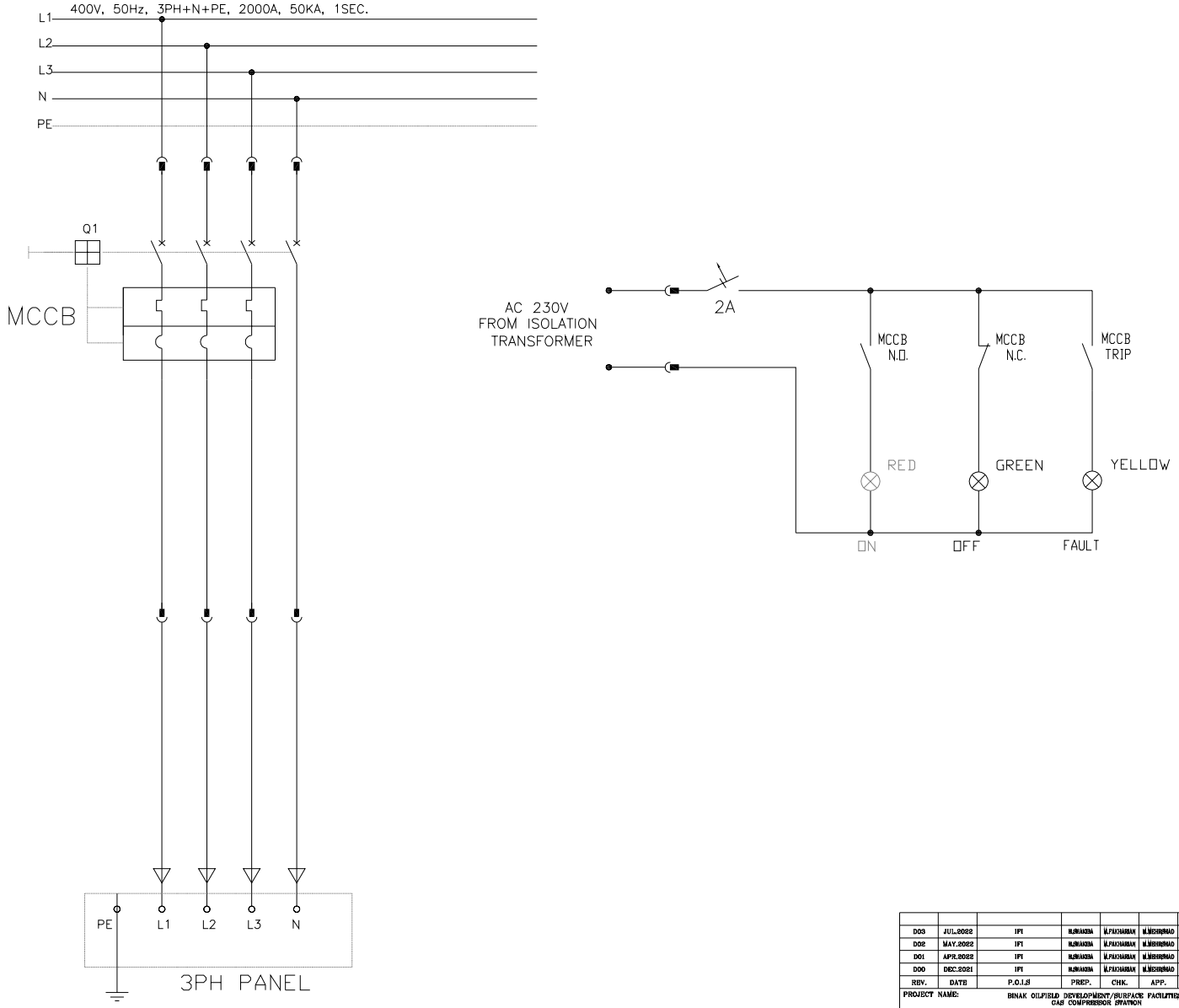

F4: SIMPLE 3-POLE MCCB FEEDER WITH THERMAL/MAGNETIC TRIPS, FOR I<63A FEEDERS.

NOTES

LEGEND

REFERENCE DRAWING	DRG. No.
LV SWITCHGEAR/MCC SINGLE LINE DIAGRAM	BK-GCS-PEDCO-120-EL-SL-0002
CONTROL LOGIC DIAGRAM FOR LV INCOMERS & BUS TIE	BK-GCS-PEDCO-120-EL-LD-0001
ELECTRICAL OVERALL SINGLE LINE DIAGRAM	BK-GCS-PEDCO-120-EL-SL-0001

KEY PLAN

REV.	DATE	P.O.I.S	PREP.	CHK.	APP.	AUT.
D03	JUL.2022	IFI	M.SHAKERA	M.PAKNAHAN	M.MEHRERNAD	**.**
D02	MAY.2022	IFI	M.SHAKERA	M.PAKNAHAN	M.MEHRERNAD	**.**
D01	APR.2022	IFI	M.SHAKERA	M.PAKNAHAN	M.MEHRERNAD	**.**
D00	DEC.2021	IFI	M.SHAKERA	M.PAKNAHAN	M.MEHRERNAD	**.**

REV.	DESCRIPTION	CHECKED BY	CHECKED DATE	REV. APPR. BY	REV. APPR. DATE
***	**********	**.**	***.****	**.**	***.****

PROJECT NAME: BINAK OILFIELD DEVELOPMENT/SURFACE FACILITIES GAS COMPRESSOR STATION

PROJECT NO.: 971020

EPC CONTRACTOR: HIRGAN ENERGY – DESIGN & INSPECTION COMPANIES

EPD/EPC CONTRACTOR (GC): PEDCO — PETROIRAN DEVELOPMENT COMPANY

اصل و کلیه نسخ این نقشه و حق اختراعی متعلق به شرکت ملی مناطق نفت خیز جنوب میباشد.

THE ORIGINAL AND ALL COPIES OF THIS DRAWING TOGETHER WITH THE COPYRIGHT THEREIN ARE THE SOLE PROPERTY OF N.I.S.O.C./ FIELDS

BINAK OILFIELD DEVELOPMENT
SURFACE FACILITIES
GAS COMPRESSOR STATION

DATE	SCALE	DRAWING BY	CHECKED BY	PROJECT ENG.

(VENDOR TITLE BLOCK)**

DRAWING TITLE: ELECTRICAL TYPICAL SCHEMATIC DIAGRAMS FOR LV PANEL

NO CONSTRUCTION PERMITTED UNLESS DRAWING APPROVED

APPROVED FOR CONSTRUCTION BY: DATE:

SCALE	SIZE	DRAWING NO.	SHEET NO.	REV.	BUDGET REF.	LOCATION	SIZE	CLASS	SERIAL NO.	SHEET	REVISION
NTS	A3	BK-GCS-PEDCO-120-EL-DG-0002	09 OF 30	D03	063-073-9184	F	2	P	709041	09 OF 30	D03

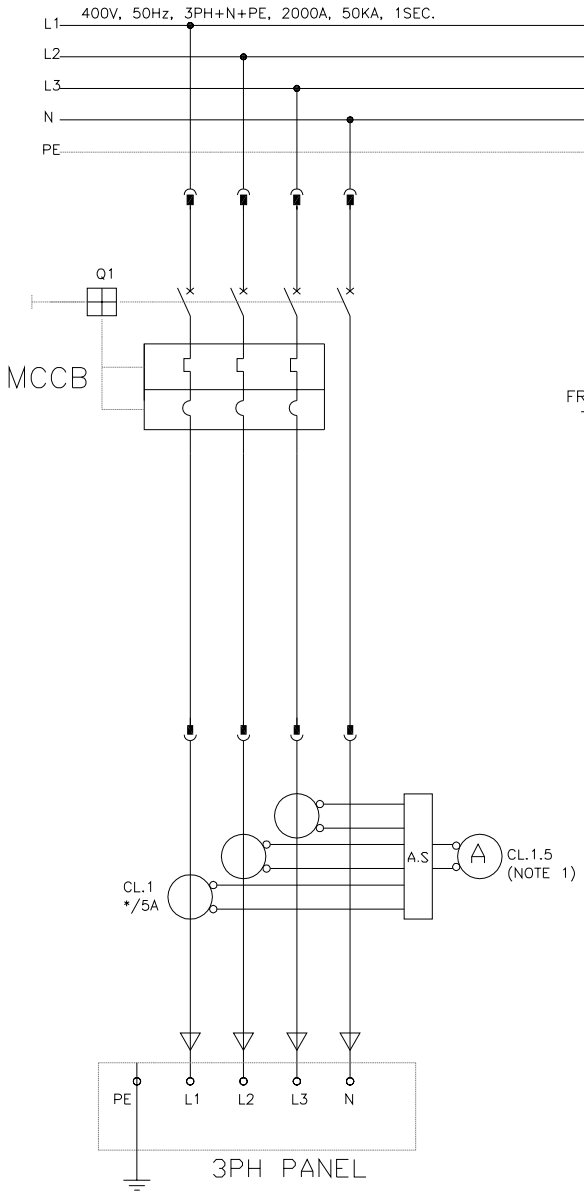

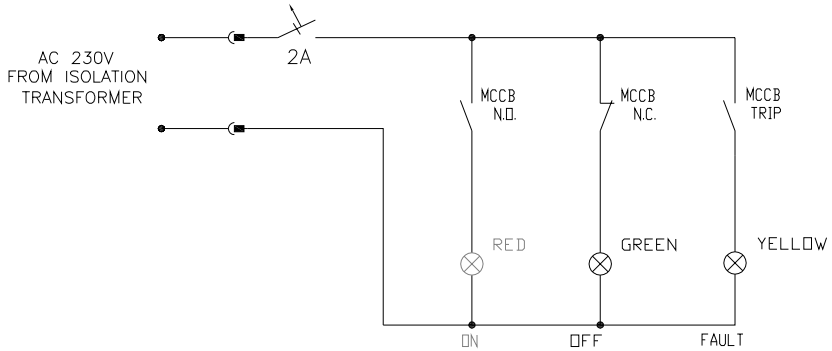

F5: SIMPLE 3-POLE MCCB FEEDER WITH THERMAL/MAGNETIC TRIPS, FOR 63A=<I<100A FEEDERS.

NOTES

LEGEND

REFERENCE DRAWING	DRG. No.
LV SWITCHGEAR/MCC SINGLE LINE DIAGRAM	BK-GCS-PEDCO-120-EL-SL-0002
CONTROL LOGIC DIAGRAM FOR LV INCOMERS & BUS TIE	BK-GCS-PEDCO-120-EL-LD-0001
ELECTRICAL OVERALL SINGLE LINE DIAGRAM	BK-GCS-PEDCO-120-EL-SL-0001

KEY PLAN

REV.	DATE	P.O.I.S	PREP.	CHK.	APP.	AUT.
D03	JUL.2022	IFI	H.SHAKERA	M.PAKNIAHRAN	M.MEHRERNAD	**.**
D02	MAY.2022	IFI	H.SHAKERA	M.PAKNIAHRAN	M.MEHRERNAD	**.**
D01	APR.2022	IFI	H.SHAKERA	M.PAKNIAHRAN	M.MEHRERNAD	**.**
D00	DEC.2021	IFI	H.SHAKERA	M.PAKNIAHRAN	M.MEHRERNAD	**.**

REV.	DESCRIPTION	BY	DATE	BY	DATE
***	**********	**.**	***.****	**.**	***.****
		CHECKED		REV. APPR.	

PROJECT NAME: BINAK OILFIELD DEVELOPMENT/SURFACE FACILITIES GAS COMPRESSOR STATION

PROJECT NO.: 971020

EPC CONTRACTOR: HIRGAN ENERGY – DESIGN & INSPECTION COMPANIES

EPD/EPC CONTRACTOR (GC): PEDCO — PETROIRAN DEVELOPMENT COMPANY

اصل و کلیه نسخ این نقشه و حق اقتباس متعلق به شرکت ملی مناطق نفت خیز جنوب میباشد.

THE ORIGINAL AND ALL COPIES OF THIS DRAWING TOGETHER WITH THE COPYRIGHT THEREIN ARE THE SOLE PROPERTY OF N.I.S.O.C./ FIELDS

BINAK OILFIELD DEVELOPMENT
SURFACE FACILITIES
GAS COMPRESSOR STATION

DATE	SCALE	DRAWING BY	CHECKED BY	PROJECT ENG.

(VENDOR TITLE BLOCK)**

DRAWING TITLE: ELECTRICAL TYPICAL SCHEMATIC DIAGRAMS FOR LV PANEL

NO CONSTRUCTION PERMITTED UNLESS DRAWING APPROVED

APPROVED FOR CONSTRUCTION BY: DATE:

SCALE	SIZE	DRAWING NO.	SHEET NO.	REV.
NTS	A3	BK-GCS-PEDCO-120-EL-DG-0002	10 OF 30	D03

BUDGET REF.	LOCATION	SIZE	CLASS	SERIAL NO.	SHEET	REVISION
063-073-9184	F	2	P	709041	10 OF 30	D03

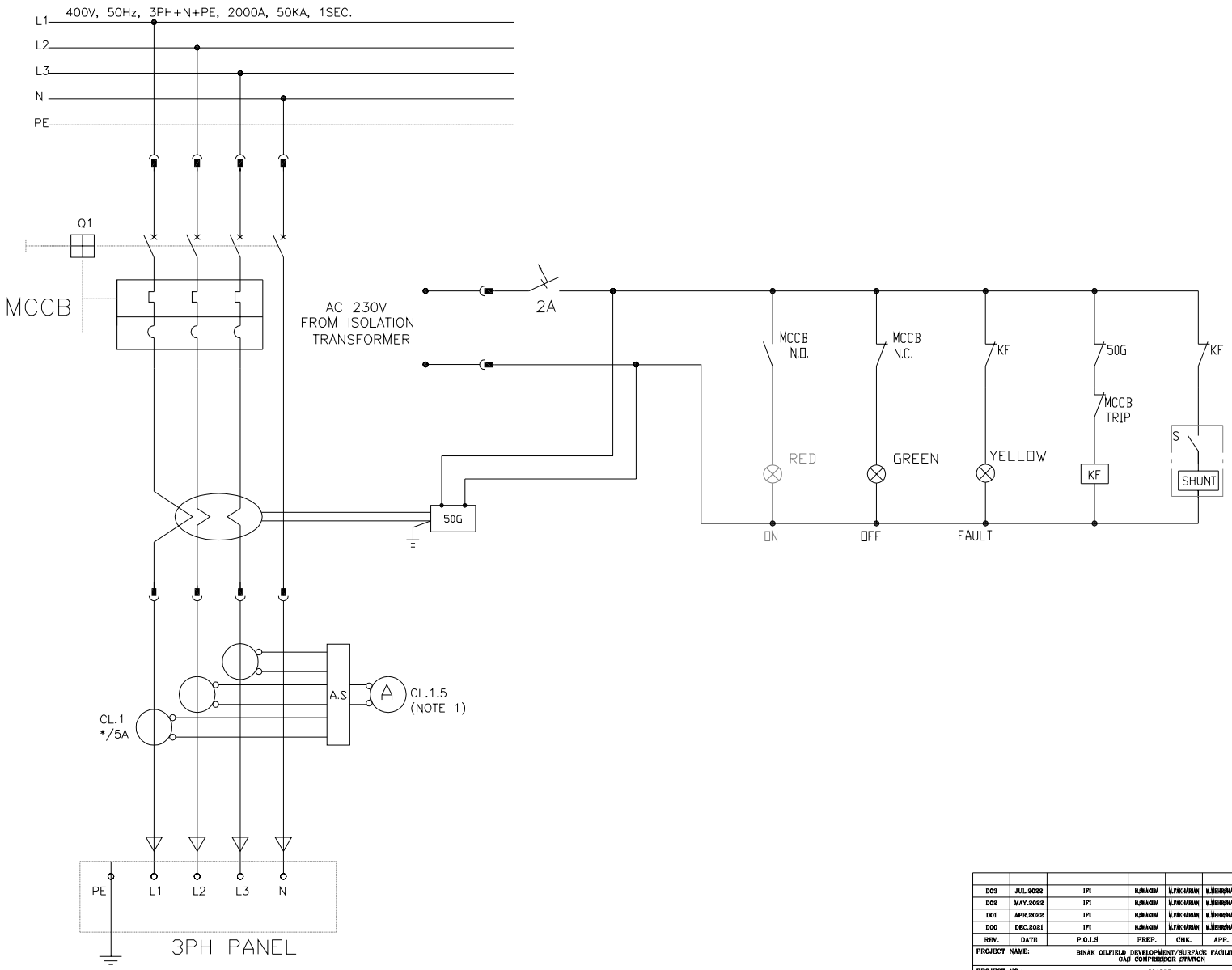

F6: SIMPLE 3-POLE MCCB FEEDER WITH THERMAL/MAGNETIC TRIPS, FOR 100A=<I FEEDERS.

NOTES

LEGEND

REFERENCE DRAWING	DRG. No.
LV SWITCHGEAR/MCC SINGLE LINE DIAGRAM	BK-GCS-PEDCO-120-EL-SL-0002
CONTROL LOGIC DIAGRAM FOR LV INCOMERS & BUS TIE	BK-GCS-PEDCO-120-EL-LD-0001
ELECTRICAL OVERALL SINGLE LINE DIAGRAM	BK-GCS-PEDCO-120-EL-SL-0001

KEY PLAN

REV.	DATE	P.O.I.S	PREP.	CHK.	APP.	AUT.
D03	JUL.2022	IFI	M.SHAKERA	M.PAKNIAHRAM	M.MEHRERNAD	**,**
D02	MAY.2022	IFI	M.SHAKERA	M.PAKNIAHRAM	M.MEHRERNAD	**,**
D01	APR.2022	IFI	M.SHAKERA	M.PAKNIAHRAM	M.MEHRERNAD	**,**
D00	DEC.2021	IFI	M.SHAKERA	M.PAKNIAHRAM	M.MEHRERNAD	**,**

REV.	DESCRIPTION	CHECKED BY	CHECKED DATE	REV. APPR. BY	REV. APPR. DATE
***	**********	**,**	***,****	**,**	***,****

PROJECT NAME: BINAK OILFIELD DEVELOPMENT/SURFACE FACILITIES GAS COMPRESSOR STATION

PROJECT NO.: 971020

EPC CONTRACTOR: HIRGAN ENERGY – DESIGN & INSPECTION COMPANIES

EPD/EPC CONTRACTOR (DC): PEDCO — PETROIRAN DEVELOPMENT COMPANY

اصل و کلیه نسخ این نقشه و حق اقتباس متعلق به شرکت ملی مناطق نفت خیز جنوب میباشد.

THE ORIGINAL AND ALL COPIES OF THIS DRAWING TOGETHER WITH THE COPYRIGHT THEREIN ARE THE SOLE PROPERTY OF N.I.S.O.C./ FIELDS

BINAK OILFIELD DEVELOPMENT
SURFACE FACILITIES
GAS COMPRESSOR STATION

DATE	SCALE	DRAWING BY	CHECKED BY	PROJECT ENG.

(VENDOR TITLE BLOCK)**

DRAWING TITLE: ELECTRICAL TYPICAL SCHEMATIC DIAGRAMS FOR LV PANEL

SCALE	SIZE	DRAWING NO.	SHEET NO.	REV.
NTS	A3	BK-GCS-PEDCO-120-EL-DG-0002	11 OF 30	D03

NO CONSTRUCTION PERMITTED UNLESS DRAWING APPROVED

APPROVED FOR CONSTRUCTION BY: DATE:

BUDGET REF.	LOCATION	SIZE	CLASS	SERIAL NO.	SHEET	REVISION
063-073-9184	F	2	P	709041	11 OF 30	D03

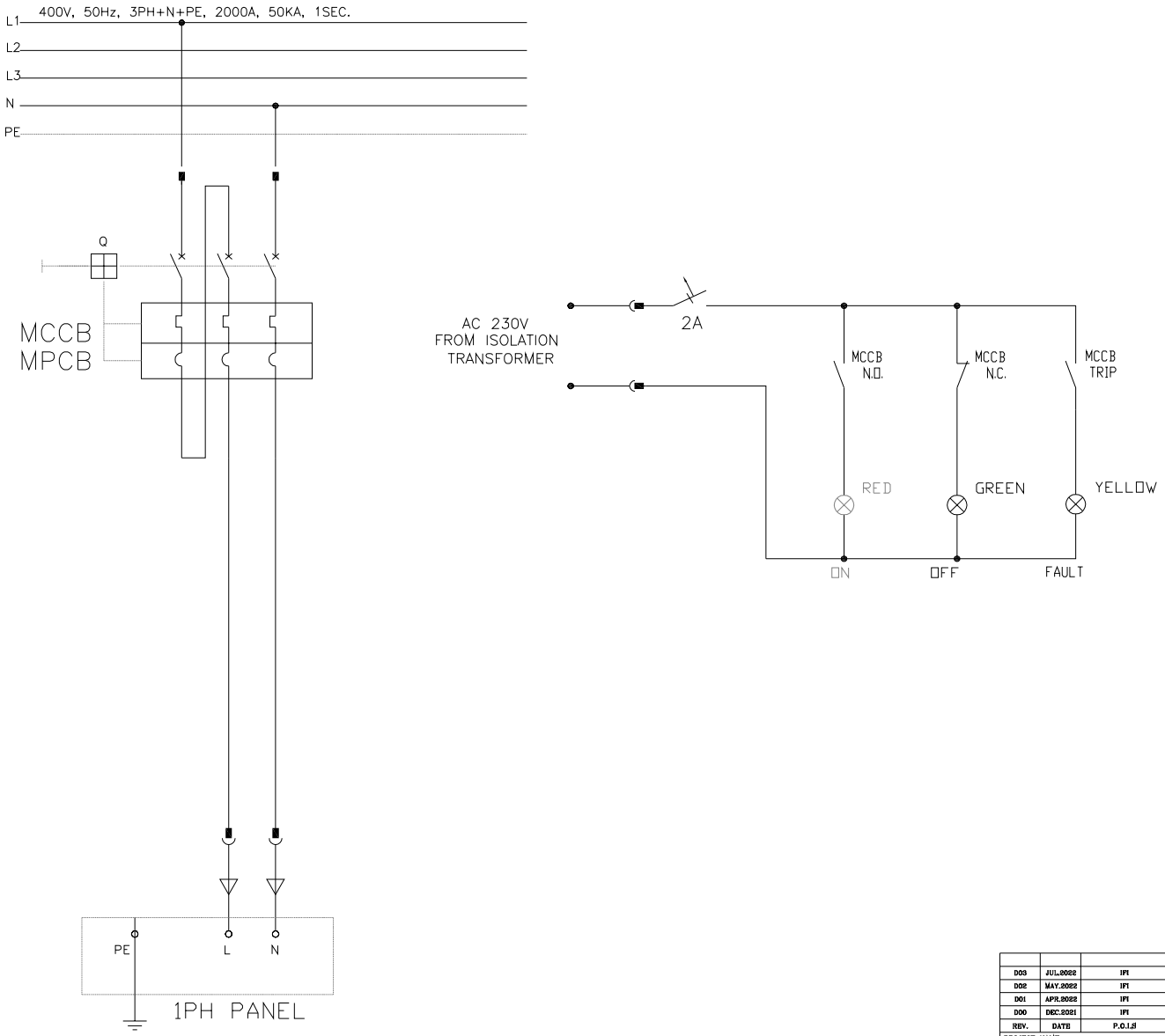

F7: SIMPLE 2-POLE MCCB FEEDER FOR FEEDING SINGLE PHASE LOADS (PH+N OR 2-PH)

NOTES

LEGEND

REFERENCE DRAWING	DRG. No.
LV SWITCHGEAR/MCC SINGLE LINE DIAGRAM	BK-GCS-PEDCO-120-EL-SL-0002
CONTROL LOGIC DIAGRAM FOR LV INCOMERS & BUS TIE	BK-GCS-PEDCO-120-EL-LD-0001
ELECTRICAL OVERALL SINGLE LINE DIAGRAM	BK-GCS-PEDCO-120-EL-SL-0001

KEY PLAN

REV.	DATE	P.O.I.S	PREP.	CHK.	APP.	AUT.
D03	JUL.2022	IFI	H.SHAKERA	M.PAKNAHAN	M.MEHRERNAD	**.**
D02	MAY.2022	IFI	H.SHAKERA	M.PAKNAHAN	M.MEHRERNAD	**.**
D01	APR.2022	IFI	H.SHAKERA	M.PAKNAHAN	M.MEHRERNAD	**.**
D00	DEC.2021	IFI	H.SHAKERA	M.PAKNAHAN	M.MEHRERNAD	**.**

REV.	DESCRIPTION	CHECKED BY	CHECKED DATE	REV. APPR. BY	REV. APPR. DATE
***	**********	**.**	***.****	**.**	***.****

PROJECT NAME: BINAK OILFIELD DEVELOPMENT/SURFACE FACILITIES GAS COMPRESSOR STATION

PROJECT NO.: 971020

EPC CONTRACTOR: HIRGAN ENERGY – DESIGN & INSPECTION COMPANIES

EPD/EPC CONTRACTOR (GC): PEDCO — PETROIRAN DEVELOPMENT COMPANY

اصل و کلیه نسخ این نقشه و حق اقتباس متعلق به شرکت ملی مناطق نفت خیز جنوب میباشد.

THE ORIGINAL AND ALL COPIES OF THIS DRAWING TOGETHER WITH THE COPYRIGHT THEREIN ARE THE SOLE PROPERTY OF N.I.S.O.C./ FIELDS

BINAK OILFIELD DEVELOPMENT
SURFACE FACILITIES
GAS COMPRESSOR STATION

DATE	SCALE	DRAWING BY	CHECKED BY	PROJECT ENG.

(VENDOR TITLE BLOCK)**

DRAWING TITLE: ELECTRICAL TYPICAL SCHEMATIC DIAGRAMS FOR LV PANEL

NO CONSTRUCTION PERMITTED UNLESS DRAWING APPROVED

APPROVED FOR CONSTRUCTION BY: DATE:

SCALE	SIZE	DRAWING NO.	SHEET NO.	REV.
NTS	A3	BK-GCS-PEDCO-120-EL-DG-0002	12 OF 30	D03

BUDGET REF.	LOCATION	SIZE	CLASS	SERIAL NO.	SHEET	REVISION
063-073-9184	F	2	P	709041	12 OF 30	D03

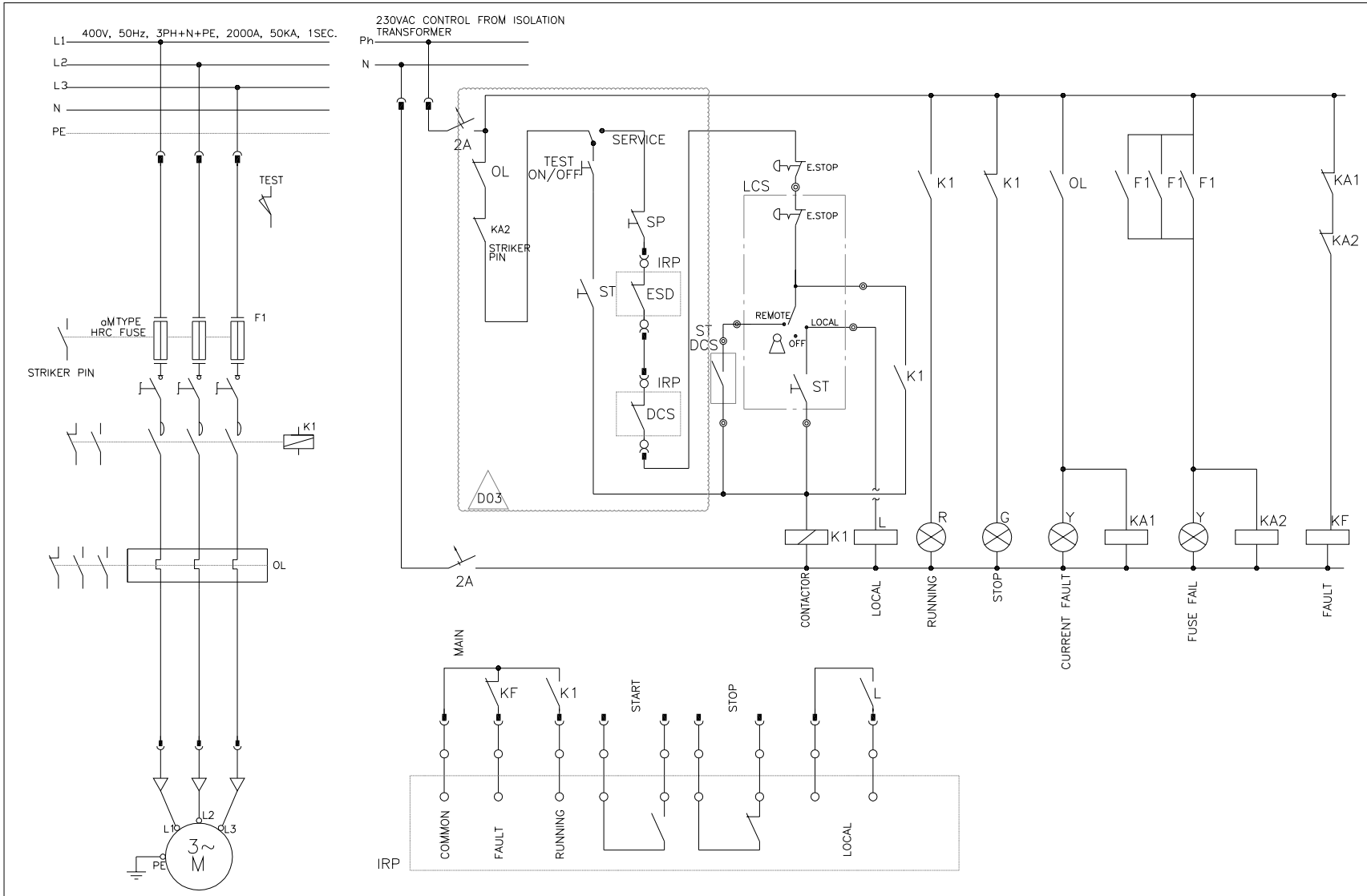

M1: DIRECT ON LINE MOTOR STARTER FEEDERS FOR 0.4kW ≤ P < 4kW

(SWITCH FUSE + CONTACTOR + BIMETAL + R/L SIGNALING)

NOTES

LEGEND

REFERENCE DRAWING	DRG. No.
LV SWITCHGEAR/MCC SINGLE LINE DIAGRAM	BK-GCS-PEDCO-120-EL-SL-0002
CONTROL LOGIC DIAGRAM FOR LV INCOMERS & BUS TIE	BK-GCS-PEDCO-120-EL-LD-0001
ELECTRICAL OVERALL SINGLE LINE DIAGRAM	BK-GCS-PEDCO-120-EL-SL-0001

KEY PLAN

REV.	DATE	P.O.I.S	PREP.	CHK.	APP.	AUT.
D03	JUL.2022	IFI	M.SHAKERA	M.PAKNAHAN	M.MEHRERMAD	**.**
D02	MAY.2022	IFI	M.SHAKERA	M.PAKNAHAN	M.MEHRERMAD	**.**
D01	APR.2022	IFI	M.SHAKERA	M.PAKNAHAN	M.MEHRERMAD	**.**
D00	DEC.2021	IFI	M.SHAKERA	M.PAKNAHAN	M.MEHRERMAD	**.**

REV.	DESCRIPTION	CHECKED BY	CHECKED DATE	REV. APPR. BY	REV. APPR. DATE
***	**********	**.**	***.****	**.**	***.****

PROJECT NAME: BINAK OILFIELD DEVELOPMENT/SURFACE FACILITIES GAS COMPRESSOR STATION

PROJECT NO.: 971020

EPC CONTRACTOR: HIRGAN ENERGY – DESIGN & INSPECTION COMPANIES

EPD/EPC CONTRACTOR (DC): PEDCO – PETROIRAN DEVELOPMENT COMPANY

اصل و کلیه نسخ این نقشه و حق اقتباس متعلق به شرکت ملی مناطق نفت خیز جنوب میباشد

THE ORIGINAL AND ALL COPIES OF THIS DRAWING TOGETHER WITH THE COPYRIGHT THEREIN ARE THE SOLE PROPERTY OF N.I.S.O.C./ FIELDS

BINAK OILFIELD DEVELOPMENT
SURFACE FACILITIES
GAS COMPRESSOR STATION

DATE	SCALE	DRAWING BY	CHECKED BY	PROJECT ENG.

(VENDOR TITLE BLOCK)**

DRAWING TITLE: ELECTRICAL TYPICAL SCHEMATIC DIAGRAMS FOR LV PANEL

NO CONSTRUCTION PERMITTED UNLESS DRAWING APPROVED

APPROVED FOR CONSTRUCTION | BY: | DATE:

SCALE	SIZE	DRAWING NO.	SHEET NO.	REV.	BUDGET REF.	LOCATION	SIZE	CLASS	SERIAL NO.	SHEET	REVISION
NTS	A3	BK-GCS-PEDCO-120-EL-DC-0002	13 OF 30	D03	063-073-9184	F	2	P	709041	13 OF 30	D03

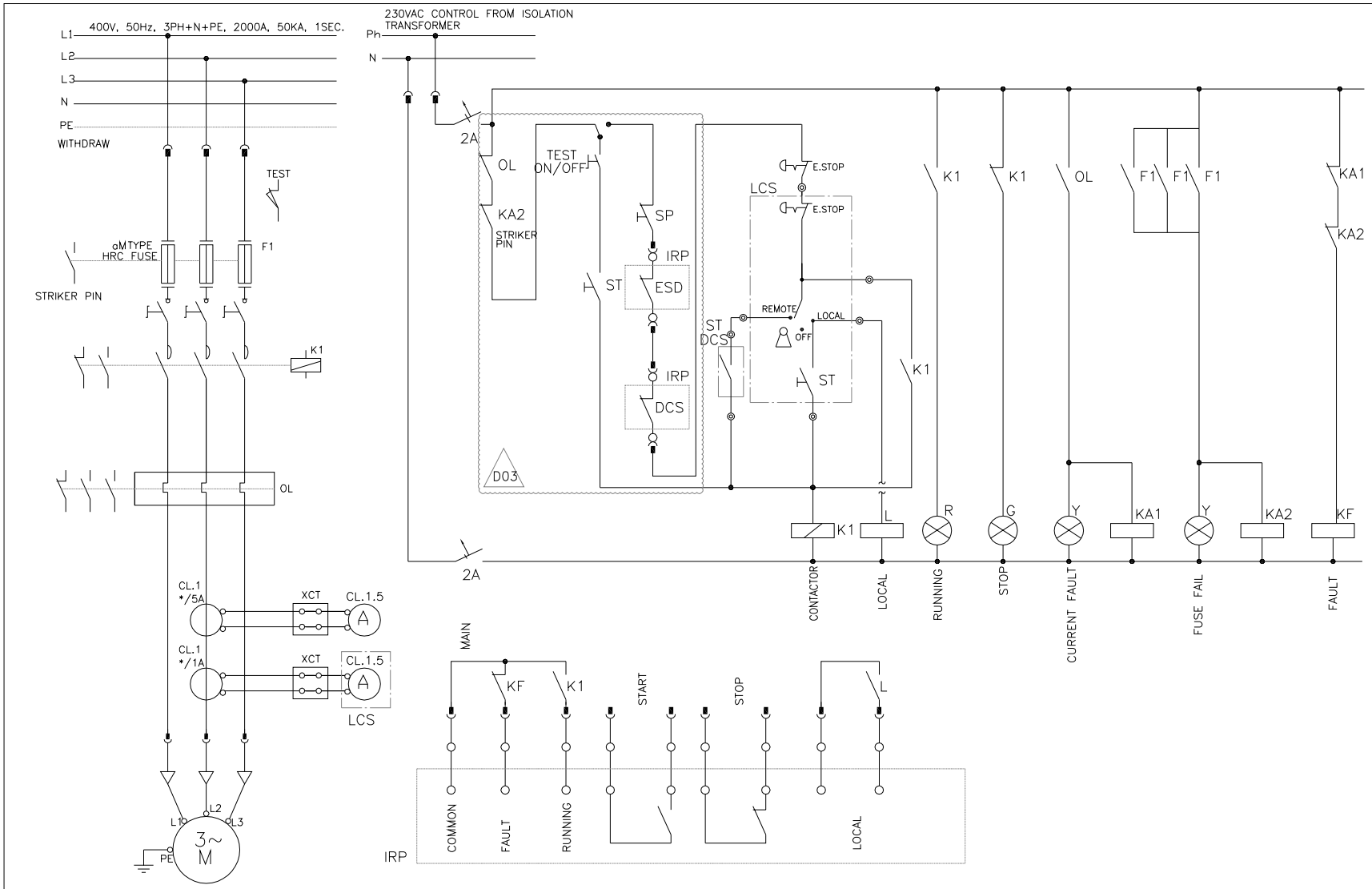

M2: DIRECT ON LINE MOTOR STARTER FEEDERS FOR 4kW ≤ P < 18.5kW

(SWITCH FUSE + CONTACTOR + BIMETAL + R/L SIGNALING + R/L AMMETER)

NOTES

LEGEND

REFERENCE DRAWING	DRG. No.
LV SWITCHGEAR/MCC SINGLE LINE DIAGRAM	BK-GCS-PEDCO-120-EL-SL-0002
CONTROL LOGIC DIAGRAM FOR LV INCOMERS & BUS TIE	BK-GCS-PEDCO-120-EL-LD-0001
ELECTRICAL OVERALL SINGLE LINE DIAGRAM	BK-GCS-PEDCO-120-EL-SL-0001

KEY PLAN

REV.	DATE	P.O.I.S	PREP.	CHK.	APP.	AUT.
D03	JUL.2022	IFI	H.SHAKERA	M.PAKNIAHRAN	M.MEHRERNAD	**.**
D02	MAY.2022	IFI	H.SHAKERA	M.PAKNIAHRAN	M.MEHRERNAD	**.**
D01	APR.2022	IFI	H.SHAKERA	M.PAKNIAHRAN	M.MEHRERNAD	**.**
D00	DEC.2021	IFI	H.SHAKERA	M.PAKNIAHRAN	M.MEHRERNAD	**.**

REV.	DESCRIPTION	CHECKED BY	CHECKED DATE	REV. APPR. BY	REV. APPR. DATE
***	**********	**.**	***.****	**.**	***.****

PROJECT NAME: BINAK OILFIELD DEVELOPMENT/SURFACE FACILITIES GAS COMPRESSOR STATION

PROJECT NO.: 971020

EPC CONTRACTOR: HIRGAN ENERGY – DESIGN & INSPECTION COMPANIES

EPD/EPC CONTRACTOR (GC): PEDCO – PETROIRAN DEVELOPMENT COMPANY

اصل و کلیه نسخ این نقشه و حق اقتباس متعلق به شرکت ملی مناطق نفت خیز جنوب میباشد

THE ORIGINAL AND ALL COPIES OF THIS DRAWING TOGETHER WITH THE COPYRIGHT THEREIN ARE THE SOLE PROPERTY OF N.I.S.O.C./ FIELDS

BINAK OILFIELD DEVELOPMENT
SURFACE FACILITIES
GAS COMPRESSOR STATION

DATE	SCALE	DRAWING BY	CHECKED BY	PROJECT ENG.

(VENDOR TITLE BLOCK)**

DRAWING TITLE: ELECTRICAL TYPICAL SCHEMATIC DIAGRAMS FOR LV PANEL

NO CONSTRUCTION PERMITTED UNLESS DRAWING APPROVED

APPROVED FOR CONSTRUCTION | BY: | DATE:

SCALE	SIZE	DRAWING NO.	SHEET NO.	REV.
NTS	A3	BK-GCS-PEDCO-120-EL-DG-0002	14 OF 30	D03

BUDGET REF.	LOCATION	SIZE	CLASS	SERIAL NO.	SHEET	REVISION
063-073-9184	F	2	P	709041	14 OF 30	D03

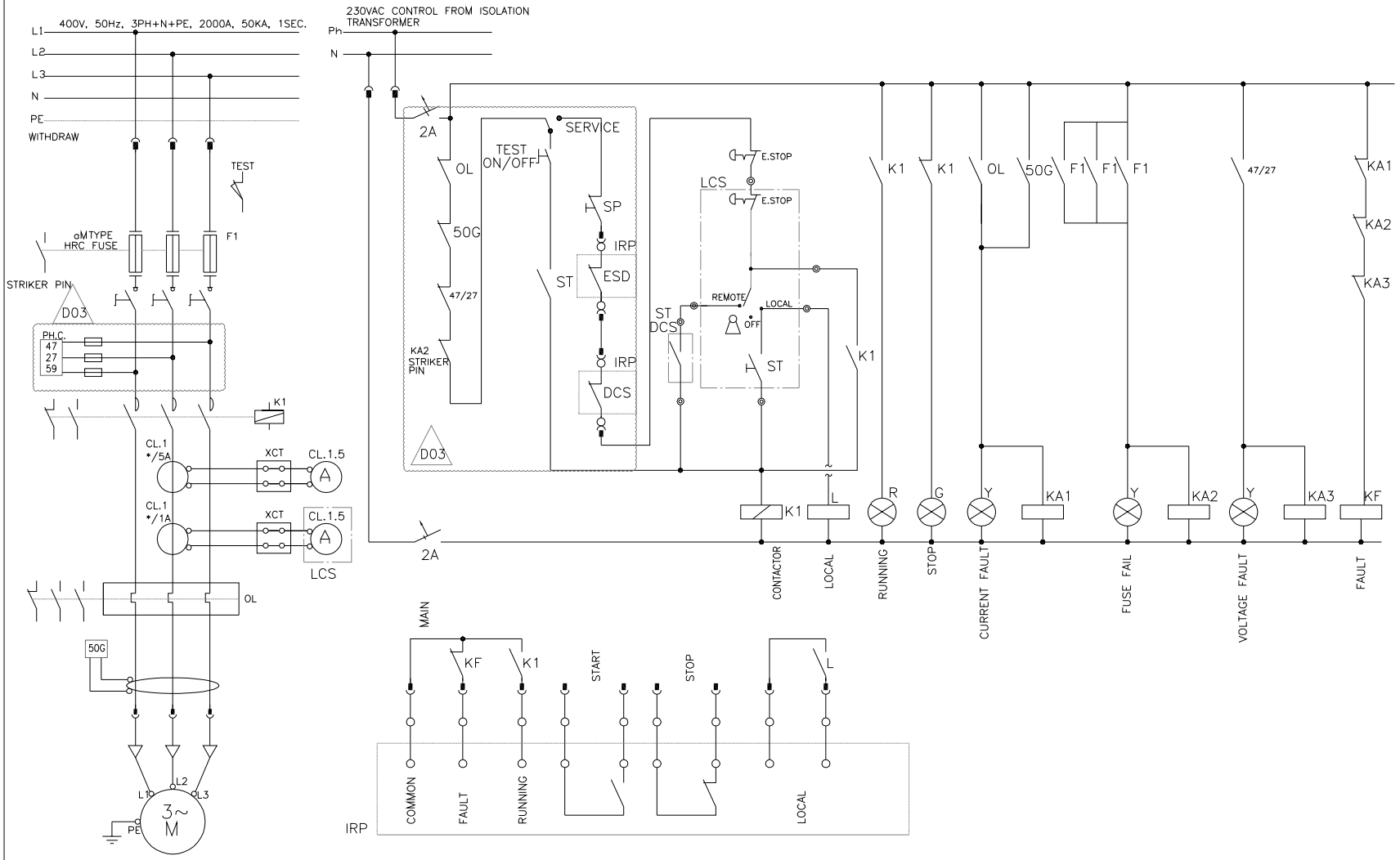

M3: DIRECT ON LINE MOTOR STARTER FEEDERS FOR 18.5kW ≤ P < 30kW
(SWITCH FUSE + CONTACTOR + BIMETAL + R/L SIGNALING+ R/L AMMETER +
(49, 50G & PHASE CONTROL)

NOTES

LEGEND

REFERENCE DRAWING	DRG. No.
LV SWITCHGBAR/MCC SINGLE LINE DIAGRAM	BK-GCS-PEDCO-120-EL-SL-0002
CONTROL LOGIC DIAGRAM FOR LV INCOMERS & BUS TIE	BK-GCS-PEDCO-120-EL-LD-0001
ELECTRICAL OVERALL SINGLE LINE DIAGRAM	BK-GCS-PEDCO-120-EL-SL-0001

KEY PLAN

REV.	DATE	P.O.I.S	PREP.	CHK.	APP.	AUT.
D03	JUL.2022	IFI	H.SHAKERA	M.PAKNAHRAM	M.MEHERNAD	**.**
D02	MAY.2022	IFI	H.SHAKERA	M.PAKNAHRAM	M.MEHERNAD	**.**
D01	APR.2022	IFI	H.SHAKERA	M.PAKNAHRAM	M.MEHERNAD	**.**
D00	DEC.2021	IFI	H.SHAKERA	M.PAKNAHRAM	M.MEHERNAD	**.**

REV.	DESCRIPTION	CHECKED BY	CHECKED DATE	REV. APPR. BY	REV. APPR. DATE
***	**********	**.**	***.****	**.**	***.****

PROJECT NAME: BINAK OILFIELD DEVELOPMENT/SURFACE FACILITIES GAS COMPRESSOR STATION

PROJECT NO.: 971020

EPC CONTRACTOR: HIRGAN ENERGY – DESIGN & INSPECTION COMPANIES

EPD/EPC CONTRACTOR (dC): PEDCO – PETROIRAN DEVELOPMENT COMPANY

اصل و کلیه نسخ این نقشه و حق اقتباس متعلق به شرکت ملی مناطق نفت خیز جنوب میباشد.

THE ORIGINAL AND ALL COPIES OF THIS DRAWING TOGETHER WITH THE COPYRIGHT THEREIN ARE THE SOLE PROPERTY OF N.I.S.O.C./ FIELDS

BINAK OILFIELD DEVELOPMENT
SURFACE FACILITIES
GAS COMPRESSOR STATION

DATE	SCALE	DRAWING BY	CHECKED BY	PROJECT ENG.

(VENDOR TITLE BLOCK)**

DRAWING TITLE: ELECTRICAL TYPICAL SCHEMATIC DIAGRAMS FOR LV PANEL

NO CONSTRUCTION PERMITTED UNLESS DRAWING APPROVED

APPROVED FOR CONSTRUCTION | BY: | DATE:

SCALE	SIZE	DRAWING NO.	SHEET NO.	REV.	BUDGET REF.	LOCATION	SIZE	CLASS	SERIAL NO.	SHEET	REVISION
NTS	A3	BK-GCS-PEDCO-120-EL-DG-0002	15 OF 30	D03	063-073-9184	F	2	P	709041	15 OF 30	D03

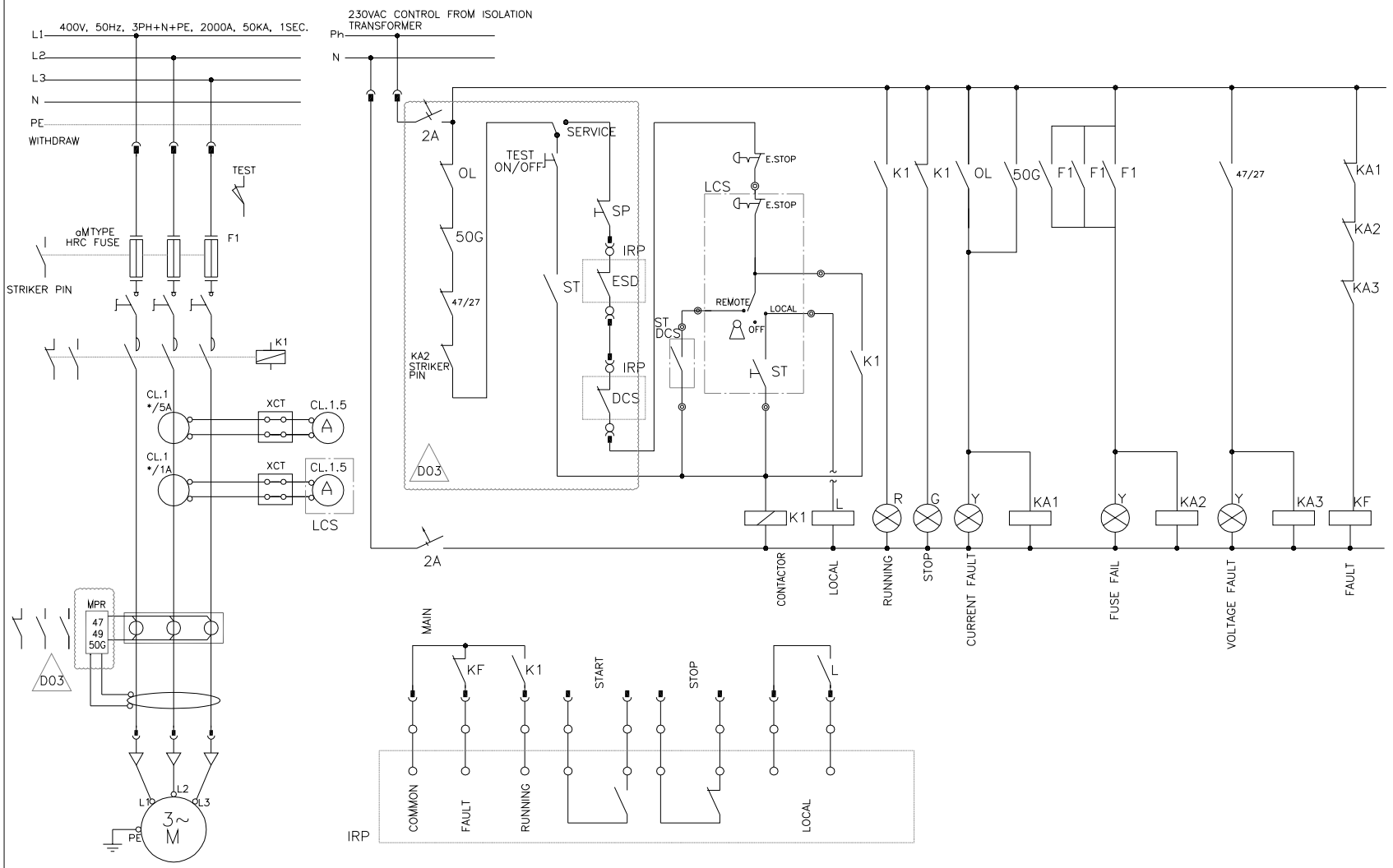

M4: DIRECT ON LINE MOTOR STARTER FEEDERS FOR P>= 30kW
(SWITCH FUSE + CONTACTOR + OVERLOAD CT + R/L SIGNALING+ R/L AMMETER + Motor Protection Relay (MPR)
(49, 50G & PHASE CONTROL)

NOTES

LEGEND

REFERENCE DRAWING	DRG. No.
LV SWITCHGEAR/MCC SINGLE LINE DIAGRAM	BK-GCS-PEDCO-120-EL-SL-0002
CONTROL LOGIC DIAGRAM FOR LV INCOMERS & BUS TIE	BK-GCS-PEDCO-120-EL-LD-0001
ELECTRICAL OVERALL SINGLE LINE DIAGRAM	BK-GCS-PEDCO-120-EL-SL-0001

KEY PLAN

REV.	DATE	P.O.I.S	PREP.	CHK.	APP.	AUT.
D03	JUL.2022	IFI	H.SHAKERI	M.PAKNAHAN	M.MEHRERMAD	**.**
D02	MAY.2022	IFI	H.SHAKERI	M.PAKNAHAN	M.MEHRERMAD	**.**
D01	APR.2022	IFI	H.SHAKERI	M.PAKNAHAN	M.MEHRERMAD	**.**
D00	DEC.2021	IFI	H.SHAKERI	M.PAKNAHAN	M.MEHRERMAD	**.**

REV.	DESCRIPTION	CHECKED BY	CHECKED DATE	REV. APPR. BY	REV. APPR. DATE
***	**********	**.**	***.****	**.**	***.****

PROJECT NAME: BINAK OILFIELD DEVELOPMENT/SURFACE FACILITIES GAS COMPRESSOR STATION

PROJECT NO.: 971020

EPC CONTRACTOR: HIRGAN ENERGY – DESIGN & INSPECTION COMPANIES

EPD/EPC CONTRACTOR (GC): PEDCO — PETROIRAN DEVELOPMENT COMPANY

اصل و کلیه نسخ این نقشه و حل اقیلس متعلق به شرکت ملی مناطق نفت خیز جنوب میباشد

THE ORIGINAL AND ALL COPIES OF THIS DRAWING TOGETHER WITH THE COPYRIGHT THEREIN ARE THE SOLE PROPERTY OF N.I.S.O.C./ FIELDS

BINAK OILFIELD DEVELOPMENT
SURFACE FACILITIES
GAS COMPRESSOR STATION

DATE	SCALE	DRAWING BY	CHECKED BY	PROJECT ENG.

(VENDOR TITLE BLOCK)**

DRAWING TITLE: ELECTRICAL TYPICAL SCHEMATIC DIAGRAMS FOR LV PANEL

NO CONSTRUCTION PERMITTED UNLESS DRAWING APPROVED

APPROVED FOR CONSTRUCTION | BY: | DATE:

SCALE	SIZE	DRAWING NO.	SHEET NO.	REV.
NTS	A3	BK-GCS-PEDCO-120-EL-DG-0002	16 OF 30	D03

BUDGET REF.	LOCATION	SIZE	CLASS	SERIAL NO.	SHEET	REVISION
063-073-9184	F	2	P	709041	16 OF 30	D03

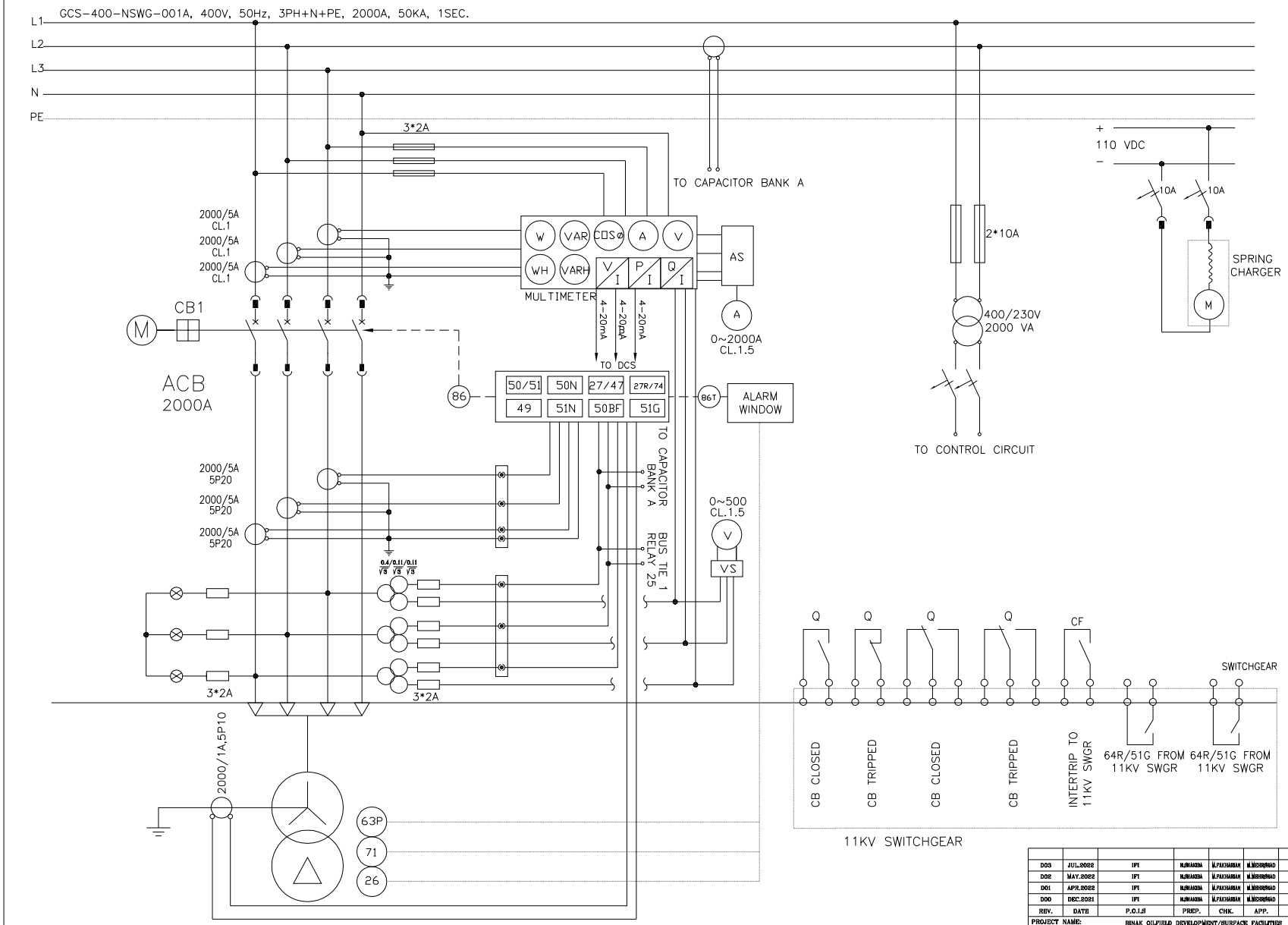

GCS-TR-001, 11/0.42KV, 1250 KVA

IN1: INCOMING 1 FROM DISTRIBUTION TRANSFORMER

NOTES

LEGEND

REFERENCE DRAWING	DRG. No.
LV SWITCHGEAR/MCC SINGLE LINE DIAGRAM	BK-GCS-PEDCO-120-EL-SL-0002
CONTROL LOGIC DIAGRAM FOR LV INCOMERS & BUS TIE	BK-GCS-PEDCO-120-EL-LD-0001
ELECTRICAL OVERALL SINGLE LINE DIAGRAM	BK-GCS-PEDCO-120-EL-SL-0001

KEY PLAN

REV.	DATE	P.O.I.S	PREP.	CHK.	APP.	AUT.
D03	JUL.2022	IFI	M.SHAKERA	M.PAKNAHAN	M.MEHRBRAD	**.**
D02	MAY.2022	IFI	M.SHAKERA	M.PAKNAHAN	M.MEHRBRAD	**.**
D01	APR.2022	IFI	M.SHAKERA	M.PAKNAHAN	M.MEHRBRAD	**.**
D00	DEC.2021	IFI	M.SHAKERA	M.PAKNAHAN	M.MEHRBRAD	**.**

REV.	DESCRIPTION	BY	DATE	BY	DATE
***	**********	**.**	***.****	**.**	***.****
		CHECKED		REV. APPR.	

PROJECT NAME: BINAK OILFIELD DEVELOPMENT/SURFACE FACILITIES GAS COMPRESSOR STATION

PROJECT NO.: 971020

EPC CONTRACTOR: HIRGAN ENERGY – DESIGN & INSPECTION COMPANIES

EPD/EPC CONTRACTOR (GC): PEDCO – PETROIRAN DEVELOPMENT COMPANY

اصل و کلیه نسخ این نقشه و حق اقتباس متعلق به شرکت ملی مناطق نفت خیز جنوب میباشد.

THE ORIGINAL AND ALL COPIES OF THIS DRAWING TOGETHER WITH THE COPYRIGHT THEREIN ARE THE SOLE PROPERTY OF N.I.S.O.C./ FIELDS

BINAK OILFIELD DEVELOPMENT SURFACE FACILITIES GAS COMPRESSOR STATION

DATE	SCALE	DRAWING BY	CHECKED BY	PROJECT ENG.

(VENDOR TITLE BLOCK)**

DRAWING TITLE: ELECTRICAL TYPICAL SCHEMATIC DIAGRAMS FOR LV PANEL

NO CONSTRUCTION PERMITTED UNLESS DRAWING APPROVED

APPROVED FOR CONSTRUCTION | BY: | DATE:

SCALE	SIZE	DRAWING NO.	SHEET NO.	REV.	BUDGET REF.	LOCATION	SIZE	CLASS	SERIAL NO.	SHEET	REVISION
NTS	A3	BK-GCS-PEDCO-120-EL-DG-0002	17 OF 30	D03	063-073-9184	F	2	P	709041	17 OF 30	D03

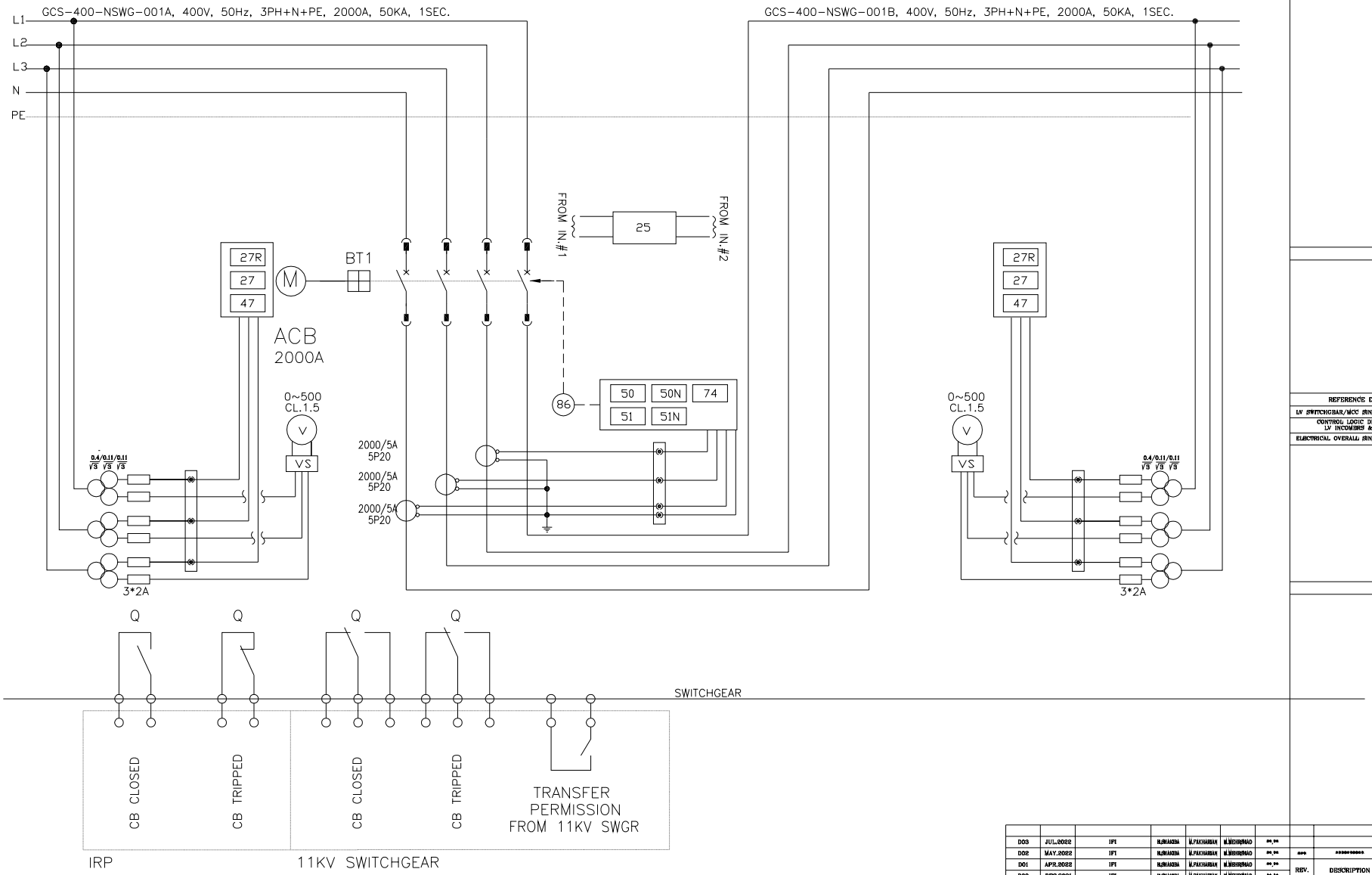

CO1: COUPLING 1

NOTES

LEGEND

REFERENCE DRAWING	DRG. No.
LV SWITCHGBAR/MCC SINGLE LINE DIAGRAM	BK-GCS-PEDCO-120-EL-SL-0002
CONTROL LOGIC DIAGRAM FOR LV INCOMERS & BUS TIE	BK-GCS-PEDCO-120-EL-LD-0001
ELECTRICAL OVERALL SINGLE LINE DIAGRAM	BK-GCS-PEDCO-120-EL-SL-0001

KEY PLAN

REV.	DATE	P.O.I.S	PREP.	CHK.	APP.	AUT.
D03	JUL.2022	IFI	H.SHAKERA	M.PAKNAHAN	M.MEHRERAD	**.**
D02	MAY.2022	IFI	H.SHAKERA	M.PAKNAHAN	M.MEHRERAD	**.**
D01	APR.2022	IFI	H.SHAKERA	M.PAKNAHAN	M.MEHRERAD	**.**
D00	DEC.2021	IFI	H.SHAKERA	M.PAKNAHAN	M.MEHRERAD	**.**

REV.	DESCRIPTION	CHECKED BY	CHECKED DATE	REV. APPR. BY	REV. APPR. DATE
***	**********	**.**	***.****	**.**	***.****

PROJECT NAME: BINAK OILFIELD DEVELOPMENT/SURFACE FACILITIES GAS COMPRESSOR STATION

PROJECT NO.: 971020

EPC CONTRACTOR: HIRGAN ENERGY – DESIGN & INSPECTION COMPANIES

EPD/EPC CONTRACTOR (GC): PEDCO — PETROIRAN DEVELOPMENT COMPANY

اصل و کلیه نسخ این نقشه و حق اقتباس متعلق به شرکت ملی مناطق نفت خیز جنوب میباشد
THE ORIGINAL AND ALL COPIES OF THIS DRAWING TOGETHER WITH THE COPYRIGHT THEREIN ARE THE SOLE PROPERTY OF N.I.S.O.C./ FIELDS

BINAK OILFIELD DEVELOPMENT
SURFACE FACILITIES
GAS COMPRESSOR STATION

DATE	SCALE	DRAWING BY	CHECKED BY	PROJECT ENG.

(VENDOR TITLE BLOCK)**

DRAWING TITLE: ELECTRICAL TYPICAL SCHEMATIC DIAGRAMS FOR LV PANEL

NO CONSTRUCTION PERMITTED UNLESS DRAWING APPROVED

APPROVED FOR CONSTRUCTION | BY: | DATE:

SCALE	SIZE	DRAWING NO.	SHEET NO.	REV.
NTS	A3	BK-GCS-PEDCO-120-EL-DG-0002	18 OF 30	D03

BUDGET REF.	LOCATION	SIZE	CLASS	SERIAL NO.	SHEET	REVISION
063-073-9184	F	2	P	709041	18 OF 30	D03

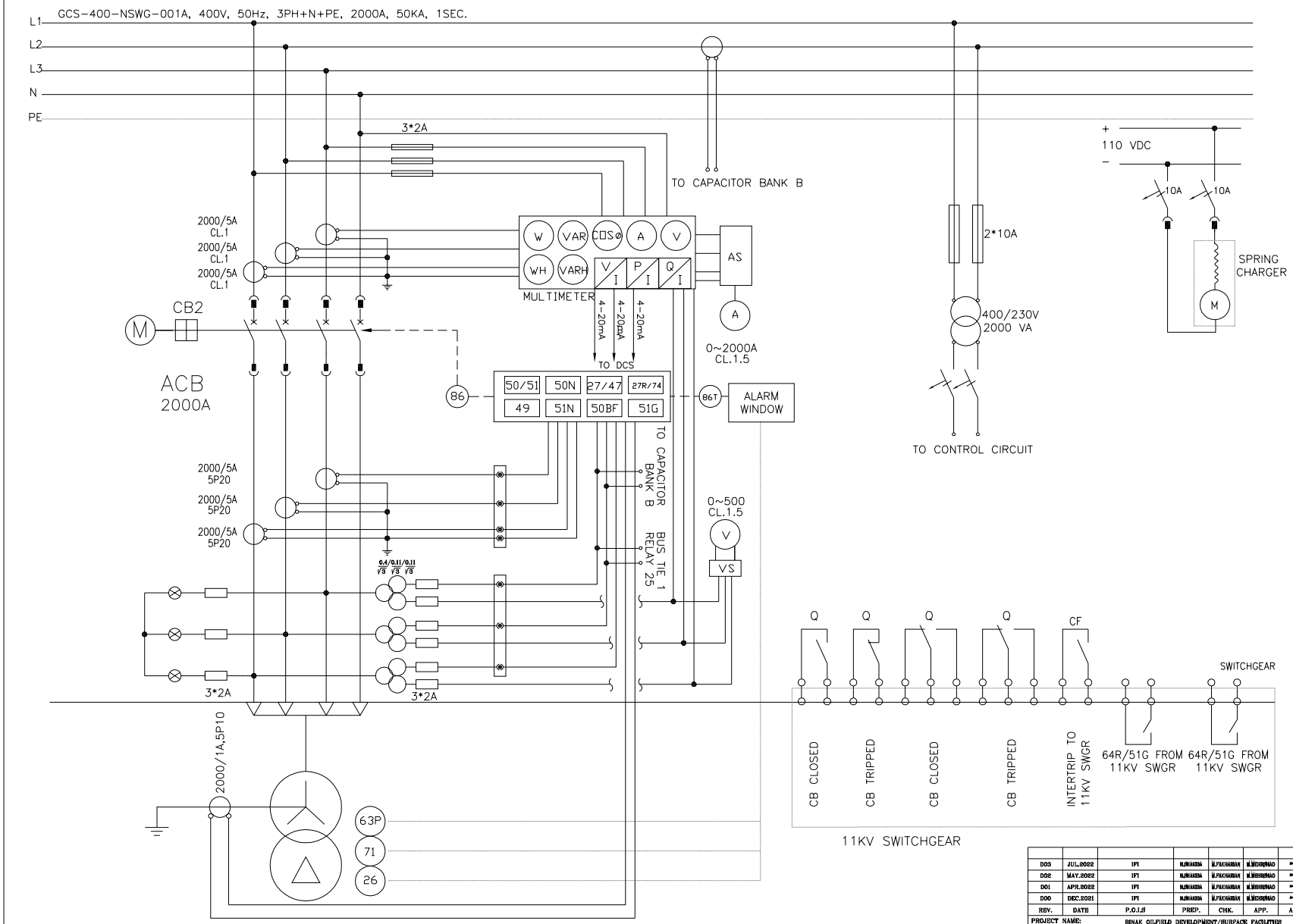

GCS-TR-002, 11/0.42KV, 1250 KVA

IN2: INCOMING 2 FROM DISTRIBUTION TRANSFORMER

NOTES

LEGEND

REFERENCE DRAWING	DRG. No.
LV SWITCHGEAR/MCC SINGLE LINE DIAGRAM	BK-GCS-PEDCO-120-EL-SL-0002
CONTROL LOGIC DIAGRAM FOR LV INCOMERS & BUS TIE	BK-GCS-PEDCO-120-EL-LD-0001
ELECTRICAL OVERALL SINGLE LINE DIAGRAM	BK-GCS-PEDCO-120-EL-SL-0001

KEY PLAN

REV.	DATE	P.O.I.S	PREP.	CHK.	APP.	AUT.
D03	JUL.2022	IFI	M.SHAKERA	M.PAKNAHAN	M.MEHRBRAD	**.**
D02	MAY.2022	IFI	M.SHAKERA	M.PAKNAHAN	M.MEHRBRAD	**.**
D01	APR.2022	IFI	M.SHAKERA	M.PAKNAHAN	M.MEHRBRAD	**.**
D00	DEC.2021	IFI	M.SHAKERA	M.PAKNAHAN	M.MEHRBRAD	**.**

REV.	DESCRIPTION	BY	DATE	BY	DATE
***	**********	**.**	***.****	**.**	***.****
		CHECKED		REV. APPR.	

PROJECT NAME: BINAK OILFIELD DEVELOPMENT/SURFACE FACILITIES GAS COMPRESSOR STATION

PROJECT NO.: 971020

EPC CONTRACTOR: HIRGAN ENERGY – DESIGN & INSPECTION COMPANIES

EPD/EPC CONTRACTOR (dC): PETROIRAN DEVELOPMENT COMPANY — PEDCO

اصل و کلیه نسخ این نقشه و حق اقتباس متعلق به شرکت ملی مناطق نفت خیز جنوب میباشد.

THE ORIGINAL AND ALL COPIES OF THIS DRAWING TOGETHER WITH THE COPYRIGHT THEREIN ARE THE SOLE PROPERTY OF N.I.S.O.C./ FIELDS

BINAK OILFIELD DEVELOPMENT SURFACE FACILITIES GAS COMPRESSOR STATION

DATE	SCALE	DRAWING BY	CHECKED BY	PROJECT ENG.

(VENDOR TITLE BLOCK)**

DRAWING TITLE: ELECTRICAL TYPICAL SCHEMATIC DIAGRAMS FOR LV PANEL

NO CONSTRUCTION PERMITTED UNLESS DRAWING APPROVED

APPROVED FOR CONSTRUCTION | BY: | DATE:

SCALE	SIZE	DRAWING NO.	SHEET NO.	REV.
NTS	A3	BK-GCS-PEDCO-120-EL-DG-0002	19 OF 30	D03

BUDGET REF.	LOCATION	SIZE	CLASS	SERIAL NO.	SHEET	REVISION
063-073-9184	F	2	P	709041	19 OF 30	D03

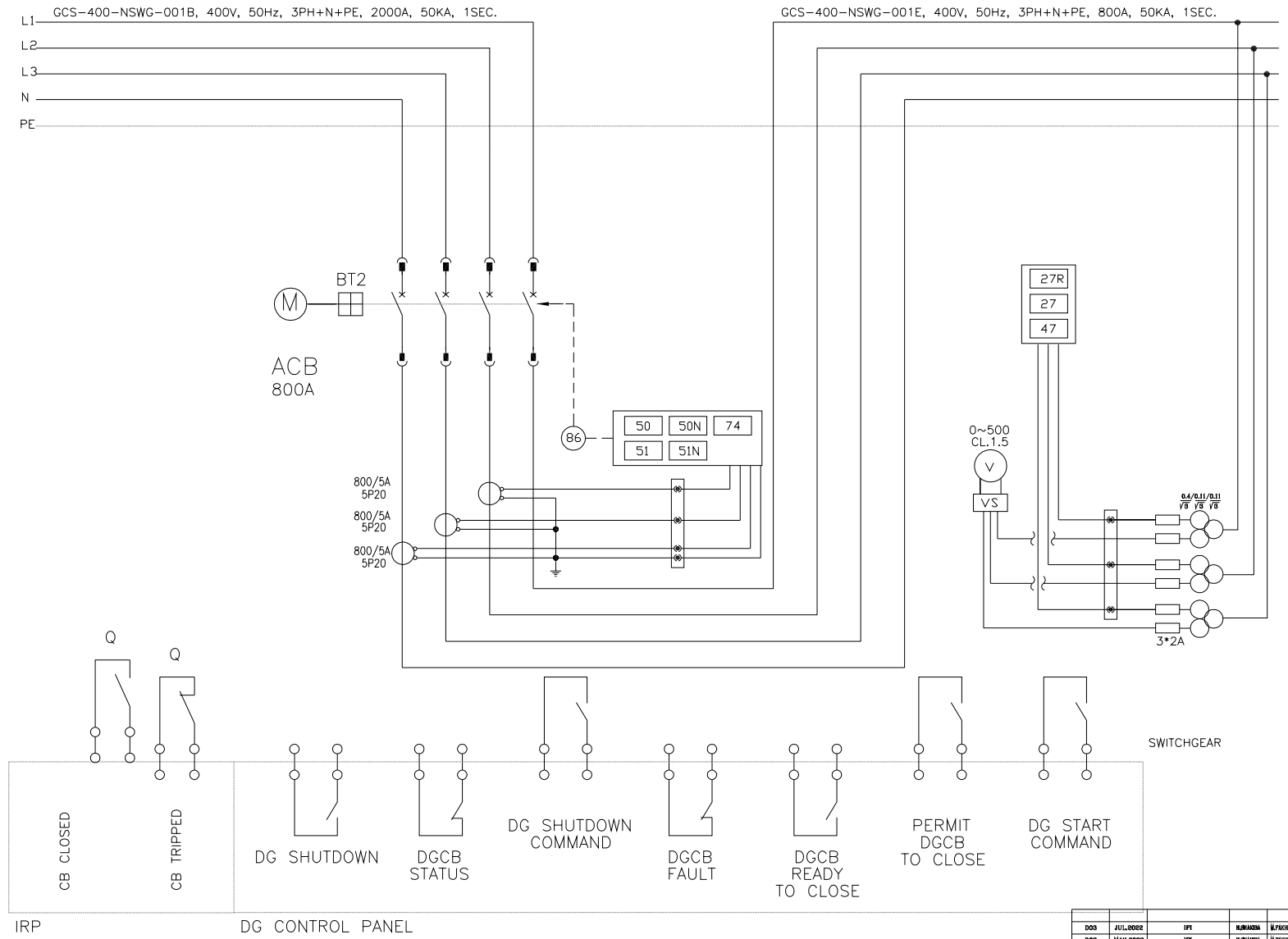

CO2: COUPLING 2

NOTES

LEGEND

REFERENCE DRAWING	DRG. No.
LV SWITCHGEAR/MCC SINGLE LINE DIAGRAM	BK-GCS-PEDCO-120-EL-SL-0002
CONTROL LOGIC DIAGRAM FOR LV INCOMERS & BUS TIE	BK-GCS-PEDCO-120-EL-LD-0001
ELECTRICAL OVERALL SINGLE LINE DIAGRAM	BK-GCS-PEDCO-120-EL-SL-0001

KEY PLAN

REV.	DATE	P.O.I.S	PREP.	CHK.	APP.	AUT.
D03	JUL.2022	IFI	M.SHAKERA	M.PAKNIAHRAN	M.MEHRERNAD	**.**
D02	MAY.2022	IFI	M.SHAKERA	M.PAKNIAHRAN	M.MEHRERNAD	**.**
D01	APR.2022	IFI	M.SHAKERA	M.PAKNIAHRAN	M.MEHRERNAD	**.**
D00	DEC.2021	IFI	M.SHAKERA	M.PAKNIAHRAN	M.MEHRERNAD	**.**

REV.	DESCRIPTION	BY	DATE	BY	DATE
***	**********	**.**	***.****	**.**	***.****
		CHECKED		REV. APPR.	

PROJECT NAME: BINAK OILFIELD DEVELOPMENT/SURFACE FACILITIES GAS COMPRESSOR STATION

PROJECT NO.: 971020

EPC CONTRACTOR: HIRGAN ENERGY – DESIGN & INSPECTION COMPANIES

EPD/EPC CONTRACTOR (GC): PEDCO — PETROIRAN DEVELOPMENT COMPANY

اصل و کلیه نسخ این نقشه و حق اختراعی متعلق به شرکت ملی مناطق نفت خیز جنوب میباشد.

THE ORIGINAL AND ALL COPIES OF THIS DRAWING TOGETHER WITH THE COPYRIGHT THEREIN ARE THE SOLE PROPERTY OF N.I.S.O.C./ FIELDS

BINAK OILFIELD DEVELOPMENT
SURFACE FACILITIES
GAS COMPRESSOR STATION

DATE	SCALE	DRAWING BY	CHECKED BY	PROJECT ENG.

NO CONSTRUCTION PERMITTED UNLESS DRAWING APPROVED

APPROVED FOR CONSTRUCTION BY: DATE:

(VENDOR TITLE BLOCK)**

DRAWING TITLE: ELECTRICAL TYPICAL SCHEMATIC DIAGRAMS FOR LV PANEL

SCALE	SIZE	DRAWING NO.	SHEET NO.	REV.
NTS	A3	BK-GCS-PEDCO-120-EL-DG-0002	20 OF 30	D03

BUDGET REF.	LOCATION	SIZE	CLASS	SERIAL NO.	SHEET	REVISION
063-073-9184	F	2	P	709041	20 OF 30	D03

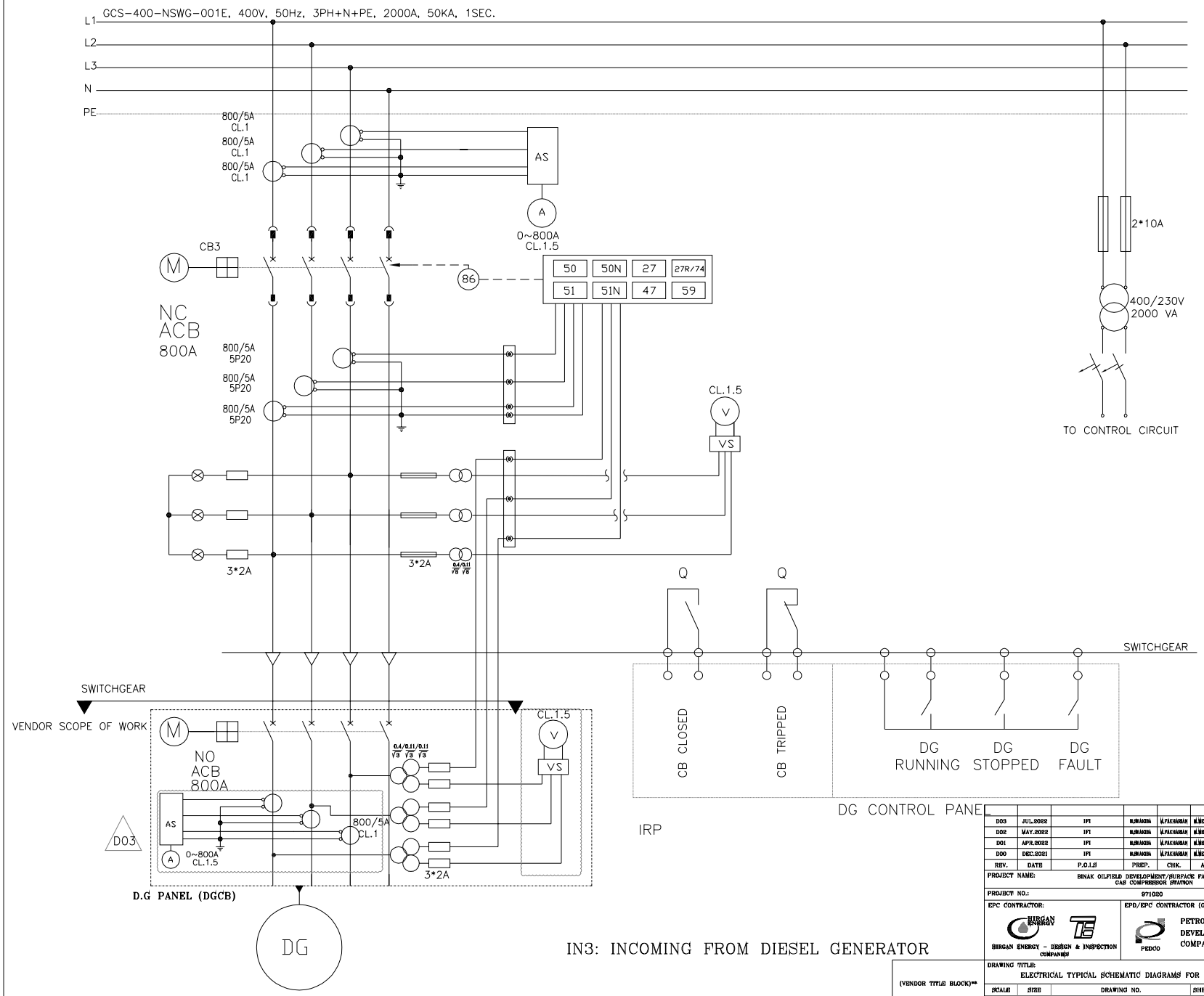

NOTES

LEGEND

REFERENCE DRAWING	DRG. No.
LV SWITCHGEAR/MCC SINGLE LINE DIAGRAM	BK-GCS-PEDCO-120-EL-SL-0002
CONTROL LOGIC DIAGRAM FOR LV INCOMERS & BUS TIE	BK-GCS-PEDCO-120-EL-LD-0001
ELECTRICAL OVERALL SINGLE LINE DIAGRAM	BK-GCS-PEDCO-120-EL-SL-0001

KEY PLAN

REV.	DATE	P.O.I.S	PREP.	CHK.	APP.	AUT.
D03	JUL.2022	IFI	H.SHAKERI	M.PAKNAHRAM	M.MEHREBRAD	**.**
D02	MAY.2022	IFI	H.SHAKERI	M.PAKNAHRAM	M.MEHREBRAD	**.**
D01	APR.2022	IFI	H.SHAKERI	M.PAKNAHRAM	M.MEHREBRAD	**.**
D00	DEC.2021	IFI	H.SHAKERI	M.PAKNAHRAM	M.MEHREBRAD	**.**

REV.	DESCRIPTION	CHECKED BY	CHECKED DATE	REV. APPR. BY	REV. APPR. DATE
***	**********	**.**	***.****	**.**	***.****

PROJECT NAME: BINAK OILFIELD DEVELOPMENT/SURFACE FACILITIES GAS COMPRESSOR STATION

PROJECT NO.: 971020

EPC CONTRACTOR: HIRGAN ENERGY – DESIGN & INSPECTION COMPANIES

EPD/EPC CONTRACTOR (GC): PEDCO — PETROIRAN DEVELOPMENT COMPANY

اصل و کلیه نسخ این نقشه و حق اقتباس متعلق به شرکت ملی مناطق نفت خیز جنوب میباشد.

THE ORIGINAL AND ALL COPIES OF THIS DRAWING TOGETHER WITH THE COPYRIGHT THEREIN ARE THE SOLE PROPERTY OF N.I.S.O.C./ FIELDS

BINAK OILFIELD DEVELOPMENT SURFACE FACILITIES GAS COMPRESSOR STATION

DATE	SCALE	DRAWING BY	CHECKED BY	PROJECT ENG.

NO CONSTRUCTION PERMITTED UNLESS DRAWING APPROVED

APPROVED FOR CONSTRUCTION BY: DATE:

(VENDOR TITLE BLOCK)**

DRAWING TITLE: ELECTRICAL TYPICAL SCHEMATIC DIAGRAMS FOR LV PANEL

SCALE	SIZE	DRAWING NO.	SHEET NO.	REV.
NTS	A3	BK-GCS-PEDCO-120-EL-DG-0002	21 OF 30	D03

BUDGET REF.	LOCATION	SIZE	CLASS	SERIAL NO.	SHEET	REVISION
063-073-9184	F	2	P	709041	21 OF 30	D03

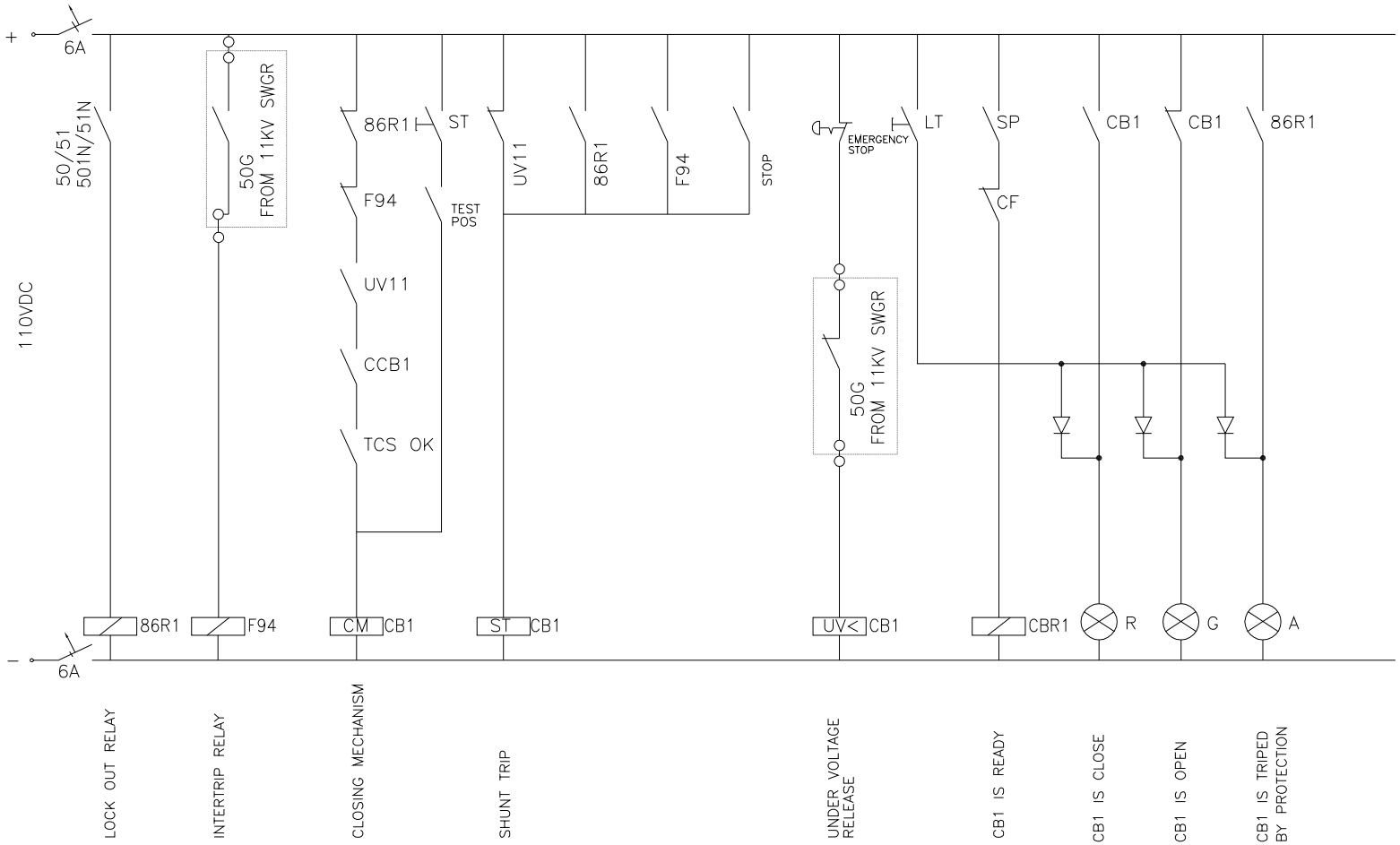

INCOMING 1 (CB1)

NOTES

LEGEND

– –

REFERENCE DRAWING	DRG. No.
LV SWITCHGEAR/MCC SINGLE LINE DIAGRAM	BK-GCS-PEDCO-120-EL-SL-0002
CONTROL LOGIC DIAGRAM FOR LV INCOMERS & BUS TIE	BK-GCS-PEDCO-120-EL-LD-0001
ELECTRICAL OVERALL SINGLE LINE DIAGRAM	BK-GCS-PEDCO-120-EL-SL-0001

KEY PLAN

REV.	DATE	P.O.I.S	PREP.	CHK.	APP.	AUT.
D03	JUL.2022	IFI	M.SHAKERA	M.PAKNAHAN	M.MEHRERAD	**.**
D02	MAY.2022	IFI	M.SHAKERA	M.PAKNAHAN	M.MEHRERAD	**.**
D01	APR.2022	IFI	M.SHAKERA	M.PAKNAHAN	M.MEHRERAD	**.**
D00	DEC.2021	IFI	M.SHAKERA	M.PAKNAHAN	M.MEHRERAD	**.**

REV.	DESCRIPTION	CHECKED BY	CHECKED DATE	REV. APPR. BY	REV. APPR. DATE
***	**********	**.**	***.****	**.**	***.****

PROJECT NAME: BINAK OILFIELD DEVELOPMENT/SURFACE FACILITIES GAS COMPRESSOR STATION

PROJECT NO.: 971020

EPC CONTRACTOR: HIRGAN ENERGY – DESIGN & INSPECTION COMPANIES

EPD/EPC CONTRACTOR (GC): PEDCO – PETROIRAN DEVELOPMENT COMPANY

اصل و کلیه نسخ این نقشه و حق اقتباس متعلق به شرکت ملی مناطق نفت خیز جنوب میباشد.

THE ORIGINAL AND ALL COPIES OF THIS DRAWING TOGETHER WITH THE COPYRIGHT THEREIN ARE THE SOLE PROPERTY OF N.I.S.O.C./ FIELDS

BINAK OILFIELD DEVELOPMENT
SURFACE FACILITIES
GAS COMPRESSOR STATION

DATE	SCALE	DRAWING BY	CHECKED BY	PROJECT ENG.

(VENDOR TITLE BLOCK)**

DRAWING TITLE: ELECTRICAL TYPICAL SCHEMATIC DIAGRAMS FOR LV PANEL

NO CONSTRUCTION PERMITTED UNLESS DRAWING APPROVED

APPROVED FOR CONSTRUCTION BY: DATE:

SCALE	SIZE	DRAWING NO.	SHEET NO.	REV.	BUDGET REF.	LOCATION	SIZE	CLASS	SERIAL NO.	SHEET	REVISION
NTS	A3	BK-GCS-PEDCO-120-EL-DG-0002	22 OF 30	D03	063-073-9184	F	2	P	709041	22 OF 30	D03

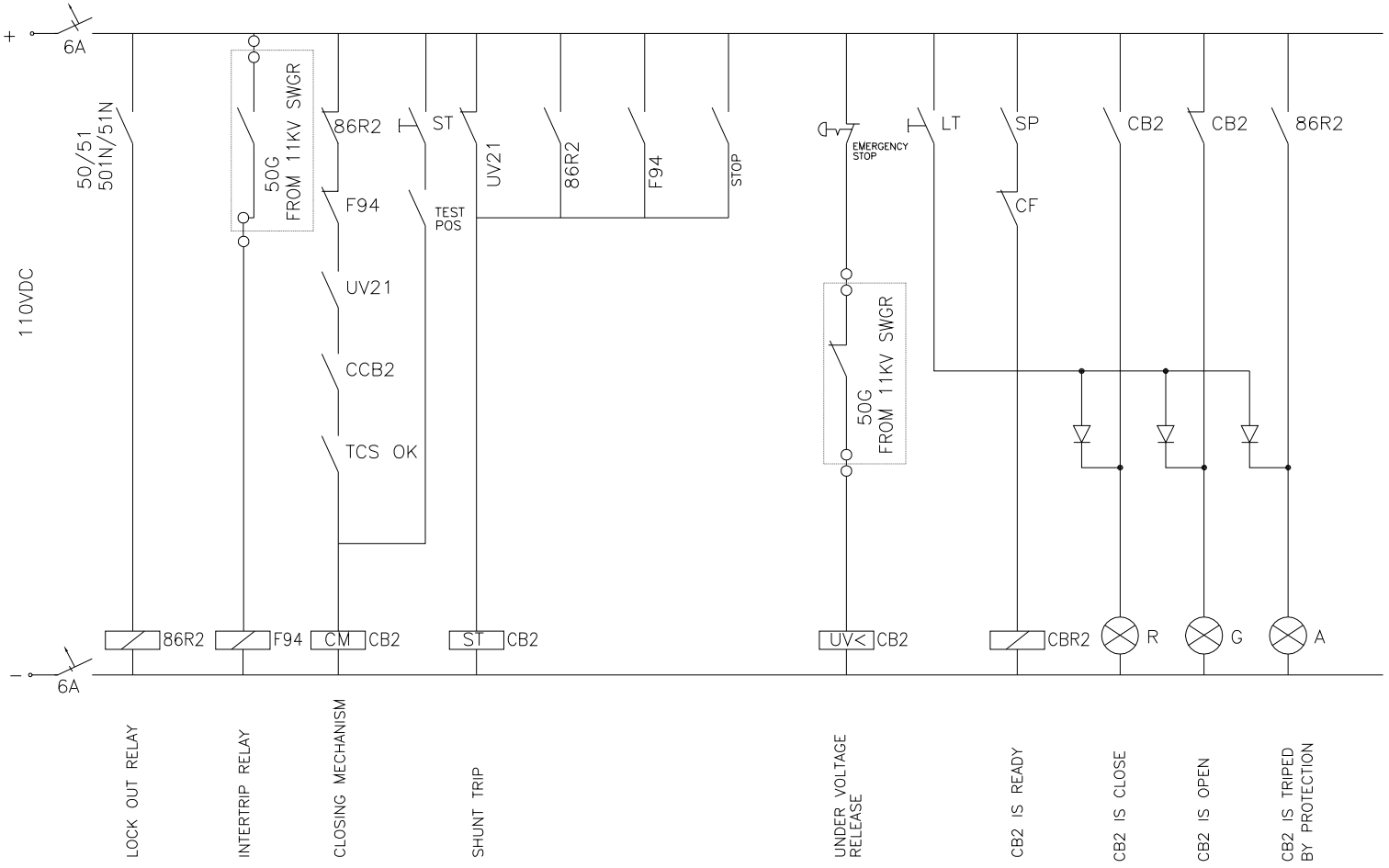

INCOMING 2 (CB2)

NOTES

LEGEND

REFERENCE DRAWING	DRG. No.
LV SWITCHGEAR/MCC SINGLE LINE DIAGRAM	BK-GCS-PEDCO-120-EL-SL-0002
CONTROL LOGIC DIAGRAM FOR LV INCOMERS & BUS TIE	BK-GCS-PEDCO-120-EL-LD-0001
ELECTRICAL OVERALL SINGLE LINE DIAGRAM	BK-GCS-PEDCO-120-EL-SL-0001

KEY PLAN

REV.	DATE	P.O.I.S	PREP.	CHK.	APP.	AUT.
D03	JUL.2022	IFI	H.SHAKERI	M.PAKNIAYAN	M.MEHRERNAD	**.**
D02	MAY.2022	IFI	H.SHAKERI	M.PAKNIAYAN	M.MEHRERNAD	**.**
D01	APR.2022	IFI	H.SHAKERI	M.PAKNIAYAN	M.MEHRERNAD	**.**
D00	DEC.2021	IFI	H.SHAKERI	M.PAKNIAYAN	M.MEHRERNAD	**.**

REV.	DESCRIPTION	CHECKED BY	CHECKED DATE	REV. APPR. BY	REV. APPR. DATE
***	**********	**.**	***.****	**.**	***.****

PROJECT NAME: BINAK OILFIELD DEVELOPMENT/SURFACE FACILITIES GAS COMPRESSOR STATION

PROJECT NO.: 971020

EPC CONTRACTOR: HIRGAN ENERGY – DESIGN & INSPECTION COMPANIES

EPD/EPC CONTRACTOR (GC): PEDCO — PETROIRAN DEVELOPMENT COMPANY

اصل و کلیه نسخ این نقشه و حق اختراعی متعلق به شرکت ملی مناطق نفت خیز جنوب میباشد.

THE ORIGINAL AND ALL COPIES OF THIS DRAWING TOGETHER WITH THE COPYRIGHT THEREIN ARE THE SOLE PROPERTY OF N.I.S.O.C./ FIELDS

BINAK OILFIELD DEVELOPMENT
SURFACE FACILITIES
GAS COMPRESSOR STATION

DATE	SCALE	DRAWING BY	CHECKED BY	PROJECT ENG.

(VENDOR TITLE BLOCK)**

DRAWING TITLE: ELECTRICAL TYPICAL SCHEMATIC DIAGRAM(S) FOR LV PANEL

NO CONSTRUCTION PERMITTED UNLESS DRAWING APPROVED

APPROVED FOR CONSTRUCTION BY: DATE:

SCALE	SIZE	DRAWING NO.	SHEET NO.	REV.
NTS	A3	BK-GCS-PEDCO-120-EL-DG-0002	23 OF 30	D03

BUDGET REF.	LOCATION	SIZE	CLASS	SERIAL NO.	SHEET	REVISION
063-073-9184	F	2	P	709041	23 OF 30	D03

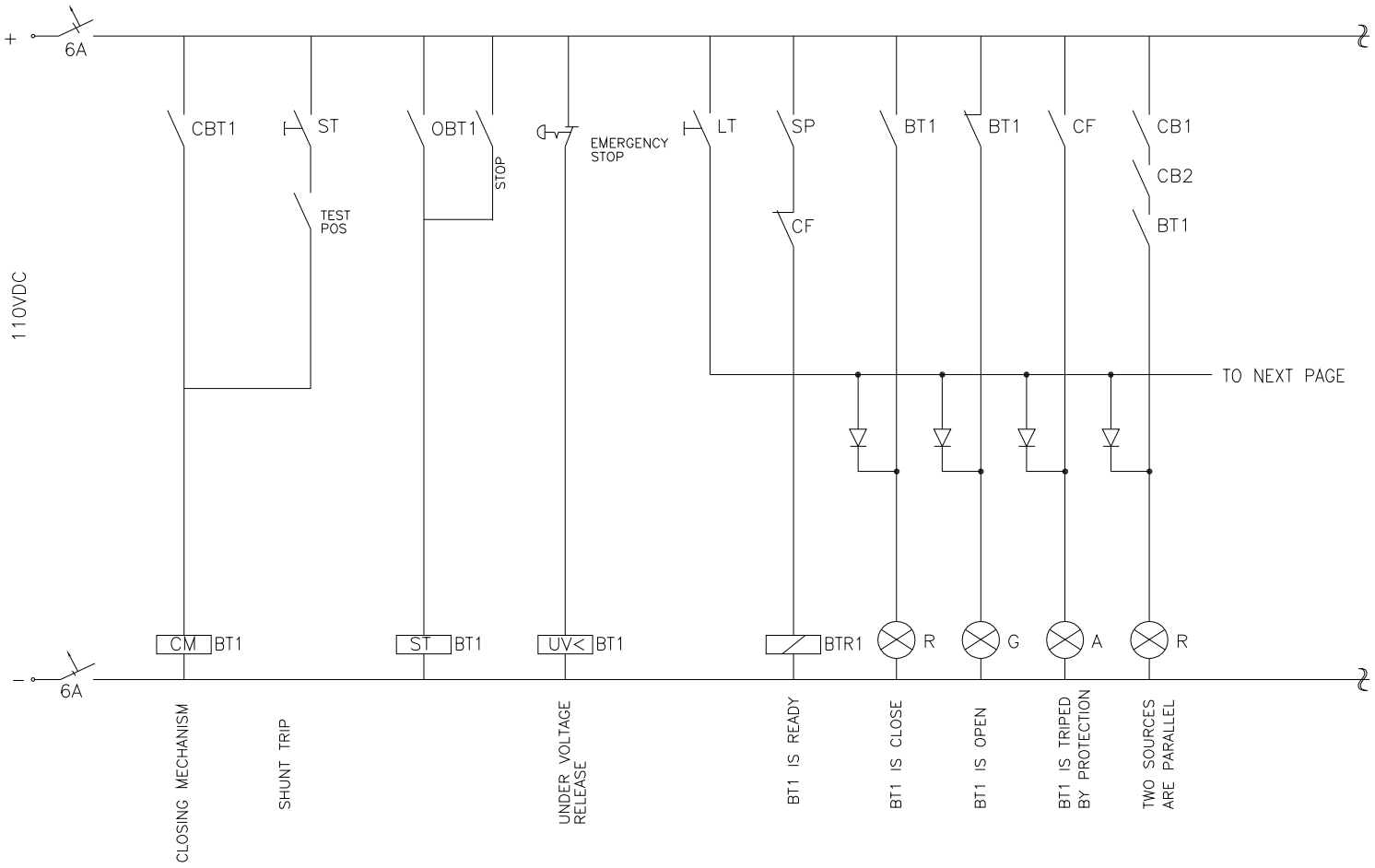

COUPLING 1 (BT1)

NOTES

LEGEND

REFERENCE DRAWING	DRG. No.
LV SWITCHGEAR/MCC SINGLE LINE DIAGRAM	BK-GCS-PEDCO-120-EL-SL-0002
CONTROL LOGIC DIAGRAM FOR LV INCOMERS & BUS TIE	BK-GCS-PEDCO-120-EL-LD-0001
ELECTRICAL OVERALL SINGLE LINE DIAGRAM	BK-GCS-PEDCO-120-EL-SL-0001

KEY PLAN

REV.	DATE	P.O.I.S	PREP.	CHK.	APP.	AUT.
D03	JUL.2022	IFI	H.SHAKERA	M.PAKNAHAN	M.MEHRERNAD	**.**
D02	MAY.2022	IFI	H.SHAKERA	M.PAKNAHAN	M.MEHRERNAD	**.**
D01	APR.2022	IFI	H.SHAKERA	M.PAKNAHAN	M.MEHRERNAD	**.**
D00	DEC.2021	IFI	H.SHAKERA	M.PAKNAHAN	M.MEHRERNAD	**.**

REV.	DESCRIPTION	CHECKED BY	CHECKED DATE	REV. APPR. BY	REV. APPR. DATE
***	**********	**.**	***.****	**.**	***.****

PROJECT NAME: BINAK OILFIELD DEVELOPMENT/SURFACE FACILITIES GAS COMPRESSOR STATION

PROJECT NO.: 971020

EPC CONTRACTOR: HIRGAN ENERGY – DESIGN & INSPECTION COMPANIES

EPD/EPC CONTRACTOR (GC): PEDCO — PETROIRAN DEVELOPMENT COMPANY

اصل و کلیه نسخ این نقشه و حق اختراعی متعلق به شرکت ملی مناطق نفت خیز جنوب میباشد.

THE ORIGINAL AND ALL COPIES OF THIS DRAWING TOGETHER WITH THE COPYRIGHT THEREIN ARE THE SOLE PROPERTY OF N.I.S.O.C./ FIELDS

BINAK OILFIELD DEVELOPMENT
SURFACE FACILITIES
GAS COMPRESSOR STATION

DATE	SCALE	DRAWING BY	CHECKED BY	PROJECT ENG.

(VENDOR TITLE BLOCK)**

DRAWING TITLE: ELECTRICAL TYPICAL SCHEMATIC DIAGRAMS FOR LV PANEL

SCALE	SIZE	DRAWING NO.	SHEET NO.	REV.
NTS	A3	BK-GCS-PEDCO-120-EL-DG-0002	24 OF 30	D03

NO CONSTRUCTION PERMITTED UNLESS DRAWING APPROVED

APPROVED FOR CONSTRUCTION BY: DATE:

BUDGET REF.	LOCATION	SIZE	CLASS	SERIAL NO.	SHEET	REVISION
063-073-9184	F	2	P	709041	24 OF 30	D03

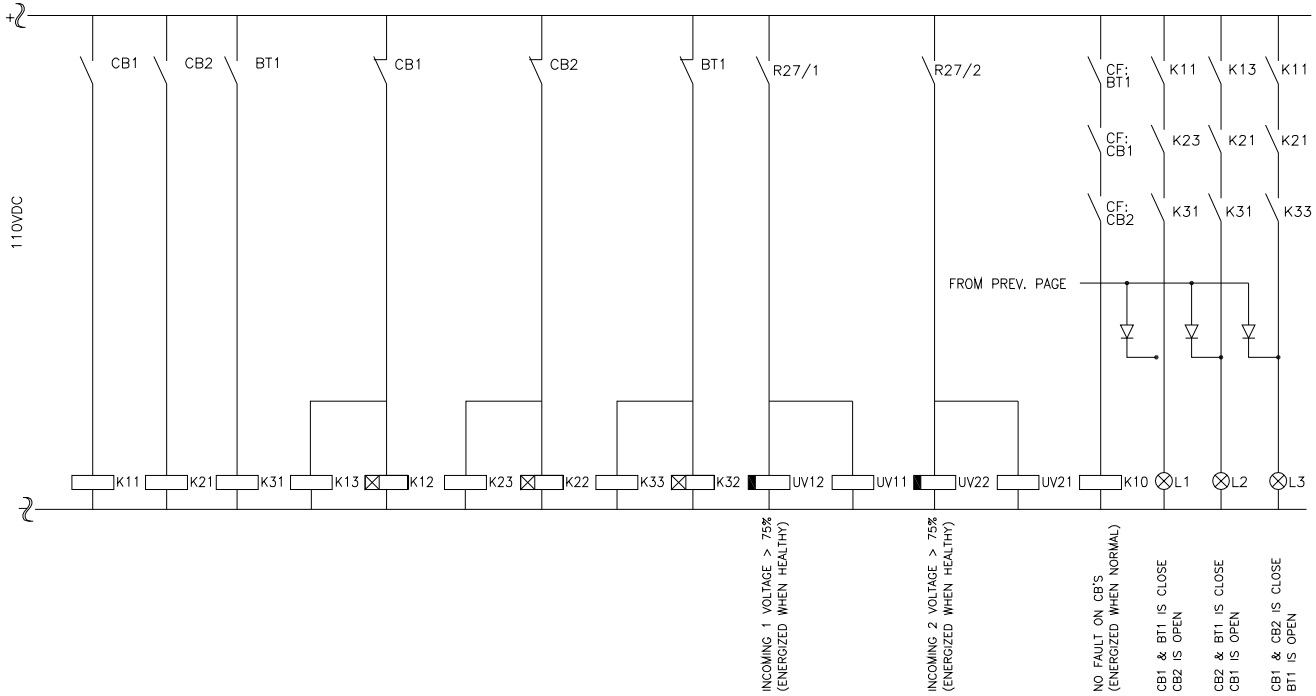

COUPLING 1 (BT1)

NOTES

LEGEND

REFERENCE DRAWING	DRG. No.
LV SWITCHGEAR/MCC SINGLE LINE DIAGRAM	BK-GCS-PEDCO-120-EL-SL-0002
CONTROL LOGIC DIAGRAM FOR LV INCOMERS & BUS TIE	BK-GCS-PEDCO-120-EL-LD-0001
ELECTRICAL OVERALL SINGLE LINE DIAGRAM	BK-GCS-PEDCO-120-EL-SL-0001

KEY PLAN

REV.	DATE	P.O.I.S	PREP.	CHK.	APP.	AUT.
D03	JUL.2022	IFI	H.SHAKERA	M.PAKNAHAN	M.MEHREMAD	**.**
D02	MAY.2022	IFI	H.SHAKERA	M.PAKNAHAN	M.MEHREMAD	**.**
D01	APR.2022	IFI	H.SHAKERA	M.PAKNAHAN	M.MEHREMAD	**.**
D00	DEC.2021	IFI	H.SHAKERA	M.PAKNAHAN	M.MEHREMAD	**.**

REV.	DESCRIPTION	CHECKED BY	CHECKED DATE	REV. APPR. BY	REV. APPR. DATE
***	**********	**.**	***.****	**.**	***.****

PROJECT NAME: BINAK OILFIELD DEVELOPMENT/SURFACE FACILITIES GAS COMPRESSOR STATION

PROJECT NO.: 971020

EPC CONTRACTOR: HIRGAN ENERGY – DESIGN & INSPECTION COMPANIES

EPD/EPC CONTRACTOR (DC): PEDCO — PETROIRAN DEVELOPMENT COMPANY

اصل و کلیه نسخ این نقشه و حق اقتباس متعلق به شرکت ملی مناطق نفت خیز جنوب میباشد.

THE ORIGINAL AND ALL COPIES OF THIS DRAWING TOGETHER WITH THE COPYRIGHT THEREIN ARE THE SOLE PROPERTY OF N.I.S.O.C./ FIELDS

BINAK OILFIELD DEVELOPMENT
SURFACE FACILITIES
GAS COMPRESSOR STATION

DATE	SCALE	DRAWING BY	CHECKED BY	PROJECT ENG.

(VENDOR TITLE BLOCK)**

DRAWING TITLE: ELECTRICAL TYPICAL SCHEMATIC DIAGRAMS FOR LV PANEL

NO CONSTRUCTION PERMITTED UNLESS DRAWING APPROVED

APPROVED FOR CONSTRUCTION BY: DATE:

SCALE	SIZE	DRAWING NO.	SHEET NO.	REV.
NTS	A3	BK-GCS-PEDCO-120-EL-DG-0002	25 OF 30	D03

BUDGET REF.	LOCATION	SIZE	CLASS	SERIAL NO.	SHEET	REVISION
063-073-9184	F	2	P	709041	25 OF 30	D03

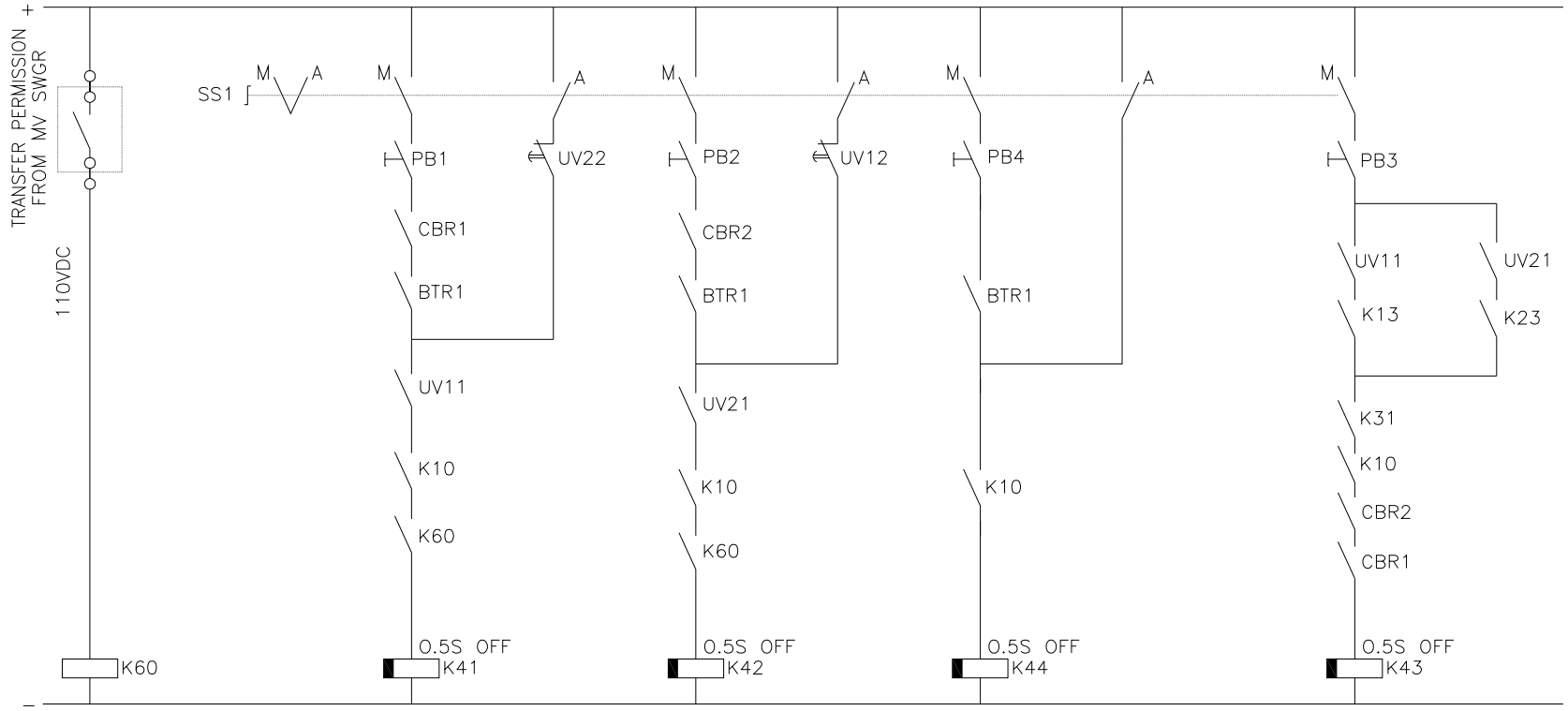

COUPLING 1 (BT1)

(TRANSFER TO IN.1)

(TRANSFER TO IN.2)

(TRANSFER TO TIE.1)

MANUAL RETURN

NOTES

LEGEND

REFERENCE DRAWING	DRG. No.
LV SWITCHGEAR/MCC SINGLE LINE DIAGRAM	BK-GCS-PEDCO-120-EL-SL-0002
CONTROL LOGIC DIAGRAM FOR LV INCOMERS & BUS TIE	BK-GCS-PEDCO-120-EL-LD-0001
ELECTRICAL OVERALL SINGLE LINE DIAGRAM	BK-GCS-PEDCO-120-EL-SL-0001

KEY PLAN

REV.	DATE	P.O.I.S	PREP.	CHK.	APP.	AUT.
D03	JUL.2022	IFI	H.SHAKERA	M.PAKNAHAN	M.MEHRERAD	**.**
D02	MAY.2022	IFI	H.SHAKERA	M.PAKNAHAN	M.MEHRERAD	**.**
D01	APR.2022	IFI	H.SHAKERA	M.PAKNAHAN	M.MEHRERAD	**.**
D00	DEC.2021	IFI	H.SHAKERA	M.PAKNAHAN	M.MEHRERAD	**.**

REV.	DESCRIPTION	CHECKED BY	CHECKED DATE	REV. APPR. BY	REV. APPR. DATE
***	**********	**.**	***.****	**.**	***.****

PROJECT NAME: BINAK OILFIELD DEVELOPMENT/SURFACE FACILITIES GAS COMPRESSOR STATION

PROJECT NO.: 971020

EPC CONTRACTOR: HIRGAN ENERGY – DESIGN & INSPECTION COMPANIES

EPD/EPC CONTRACTOR (GC): PEDCO — PETROIRAN DEVELOPMENT COMPANY

اصل و کلیه نسخ این نقشه و حق اقتباس متعلق به شرکت ملی مناطق نفت خیز جنوب میباشد.
THE ORIGINAL AND ALL COPIES OF THIS DRAWING TOGETHER WITH THE COPYRIGHT THEREIN ARE THE SOLE PROPERTY OF N.I.S.O.C./ FIELDS

BINAK OILFIELD DEVELOPMENT
SURFACE FACILITIES
GAS COMPRESSOR STATION

DATE	SCALE	DRAWING BY	CHECKED BY	PROJECT ENG.

(VENDOR TITLE BLOCK)**

DRAWING TITLE: ELECTRICAL TYPICAL SCHEMATIC DIAGRAMS FOR LV PANEL

NO CONSTRUCTION PERMITTED UNLESS DRAWING APPROVED

APPROVED FOR CONSTRUCTION BY: DATE:

SCALE	SIZE	DRAWING NO.	SHEET NO.	REV.
NTS	A3	BK-GCS-PEDCO-120-EL-DG-0002	26 OF 30	D03

BUDGET REF.	LOCATION	SIZE	CLASS	SERIAL NO.	SHEET	REVISION
063-073-9184	F	2	P	709041	26 OF 30	D03

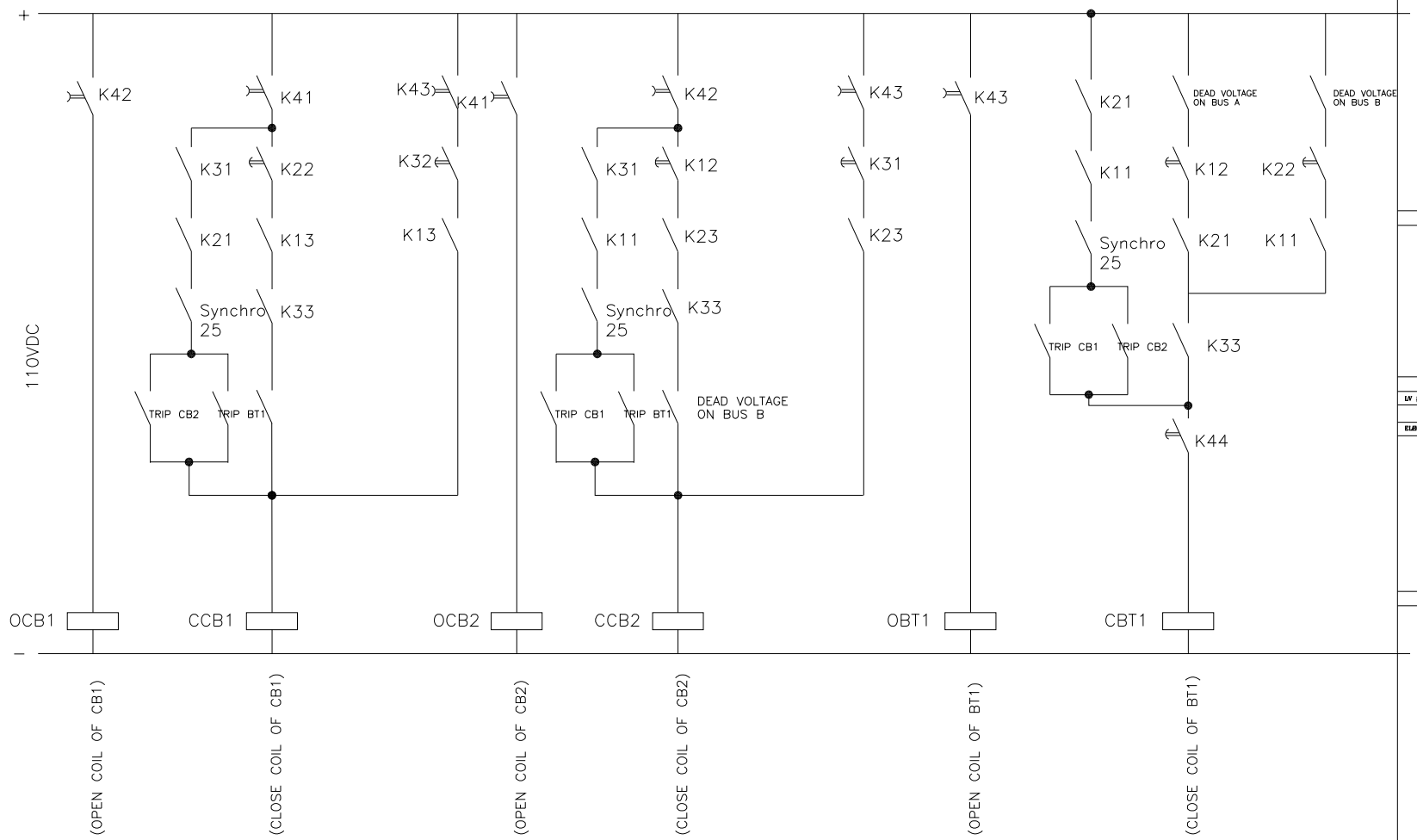

COUPLING 1 (BT1)

NOTES

LEGEND

REFERENCE DRAWING	DRG. No.
LV SWITCHGEAR/MCC SINGLE LINE DIAGRAM	BK-GCS-PEDCO-120-EL-SL-0002
CONTROL LOGIC DIAGRAM FOR LV INCOMERS & BUS TIE	BK-GCS-PEDCO-120-EL-LD-0001
ELECTRICAL OVERALL SINGLE LINE DIAGRAM	BK-GCS-PEDCO-120-EL-SL-0001

KEY PLAN

REV.	DATE	P.O.I.S	PREP.	CHK.	APP.	AUT.
D03	JUL.2022	IFI	H.SHAKERA	M.PAKNAHRAN	M.MEHRERRAD	**.**
D02	MAY.2022	IFI	H.SHAKERA	M.PAKNAHRAN	M.MEHRERRAD	**.**
D01	APR.2022	IFI	H.SHAKERA	M.PAKNAHRAN	M.MEHRERRAD	**.**
D00	DEC.2021	IFI	H.SHAKERA	M.PAKNAHRAN	M.MEHRERRAD	**.**

REV.	DESCRIPTION	CHECKED BY	CHECKED DATE	REV. APPR. BY	REV. APPR. DATE
***	**********	**.**	***.****	**.**	***.****

PROJECT NAME: BINAK OILFIELD DEVELOPMENT/SURFACE FACILITIES GAS COMPRESSOR STATION

PROJECT NO.: 971020

EPC CONTRACTOR: HIRGAN ENERGY – DESIGN & INSPECTION COMPANIES

EPD/EPC CONTRACTOR (GC): PEDCO — PETROIRAN DEVELOPMENT COMPANY

اصل و کلیه نسخ این نقشه و حق اقتباس متعلق به شرکت ملی مناطق نفت خیز جنوب میباشد.

THE ORIGINAL AND ALL COPIES OF THIS DRAWING TOGETHER WITH THE COPYRIGHT THEREIN ARE THE SOLE PROPERTY OF N.I.S.O.C./ FIELDS

BINAK OILFIELD DEVELOPMENT
SURFACE FACILITIES
GAS COMPRESSOR STATION

DATE	SCALE	DRAWING BY	CHECKED BY	PROJECT ENG.

(VENDOR TITLE BLOCK)**

DRAWING TITLE: ELECTRICAL TYPICAL SCHEMATIC DIAGRAMS FOR LV PANEL

NO CONSTRUCTION PERMITTED UNLESS DRAWING APPROVED

APPROVED FOR CONSTRUCTION BY: DATE:

SCALE	SIZE	DRAWING NO.	SHEET NO.	REV.	BUDGET REF.	LOCATION	SIZE	CLASS	SERIAL NO.	SHEET	REVISION
NTS	A3	BK-GCS-PEDCO-120-EL-DG-0002	27 OF 30	D03	063-073-9184	F	2	P	709041	27 OF 30	D03

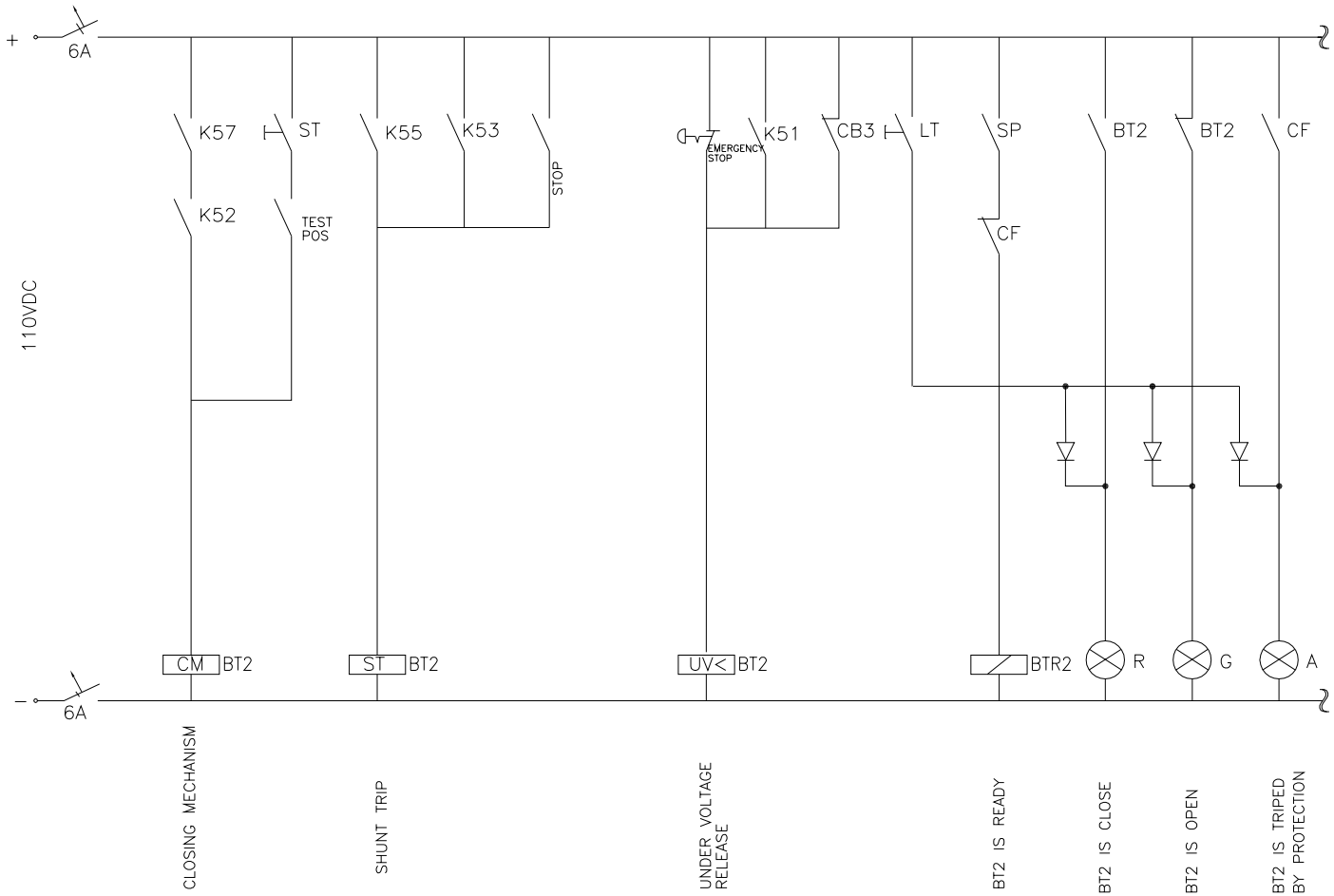

COUPLING 2 (BT2)

NOTES

LEGEND

REFERENCE DRAWING	DRG. No.
LV SWITCHGEAR/MCC SINGLE LINE DIAGRAM	BK-GCS-PEDCO-120-EL-SL-0002
CONTROL LOGIC DIAGRAM FOR LV INCOMERS & BUS TIE	BK-GCS-PEDCO-120-EL-LD-0001
ELECTRICAL OVERALL SINGLE LINE DIAGRAM	BK-GCS-PEDCO-120-EL-SL-0001

KEY PLAN

REV.	DATE	P.O.I.S	PREP.	CHK.	APP.	AUT.
D03	JUL.2022	IFI	H.SHAKERA	M.PAKNAHRAN	M.MEHRERNAD	**.**
D02	MAY.2022	IFI	H.SHAKERA	M.PAKNAHRAN	M.MEHRERNAD	**.**
D01	APR.2022	IFI	H.SHAKERA	M.PAKNAHRAN	M.MEHRERNAD	**.**
D00	DEC.2021	IFI	H.SHAKERA	M.PAKNAHRAN	M.MEHRERNAD	**.**

REV.	DESCRIPTION	CHECKED BY	CHECKED DATE	REV. APPR. BY	REV. APPR. DATE
***	**********	**.**	***.****	**.**	***.****

PROJECT NAME: BINAK OILFIELD DEVELOPMENT/SURFACE FACILITIES GAS COMPRESSOR STATION

PROJECT NO.: 971020

EPC CONTRACTOR: HIRGAN ENERGY – DESIGN & INSPECTION COMPANIES

EPD/EPC CONTRACTOR (GC): PEDCO — PETROIRAN DEVELOPMENT COMPANY

(VENDOR TITLE BLOCK)**

DRAWING TITLE: ELECTRICAL TYPICAL SCHEMATIC DIAGRAMS FOR LV PANEL

SCALE	SIZE	DRAWING NO.	SHEET NO.	REV.
NTS	A3	BK-GCS-PEDCO-120-EL-DG-0002	28 OF 30	D03

اصل و کلیه نسخ این نقشه و حق اقتباس متعلق به شرکت ملی مناطق نفت خیز جنوب میباشد.

THE ORIGINAL AND ALL COPIES OF THIS DRAWING TOGETHER WITH THE COPYRIGHT THEREIN ARE THE SOLE PROPERTY OF N.I.S.O.C./ FIELDS

BINAK OILFIELD DEVELOPMENT SURFACE FACILITIES GAS COMPRESSOR STATION

DATE	SCALE	DRAWING BY	CHECKED BY	PROJECT ENG.

NO CONSTRUCTION PERMITTED UNLESS DRAWING APPROVED

APPROVED FOR CONSTRUCTION BY: DATE:

BUDGET REF.	LOCATION	SIZE	CLASS	SERIAL NO.	SHEET	REVISION
063-073-9184	F	2	P	709041	28 OF 30	D03

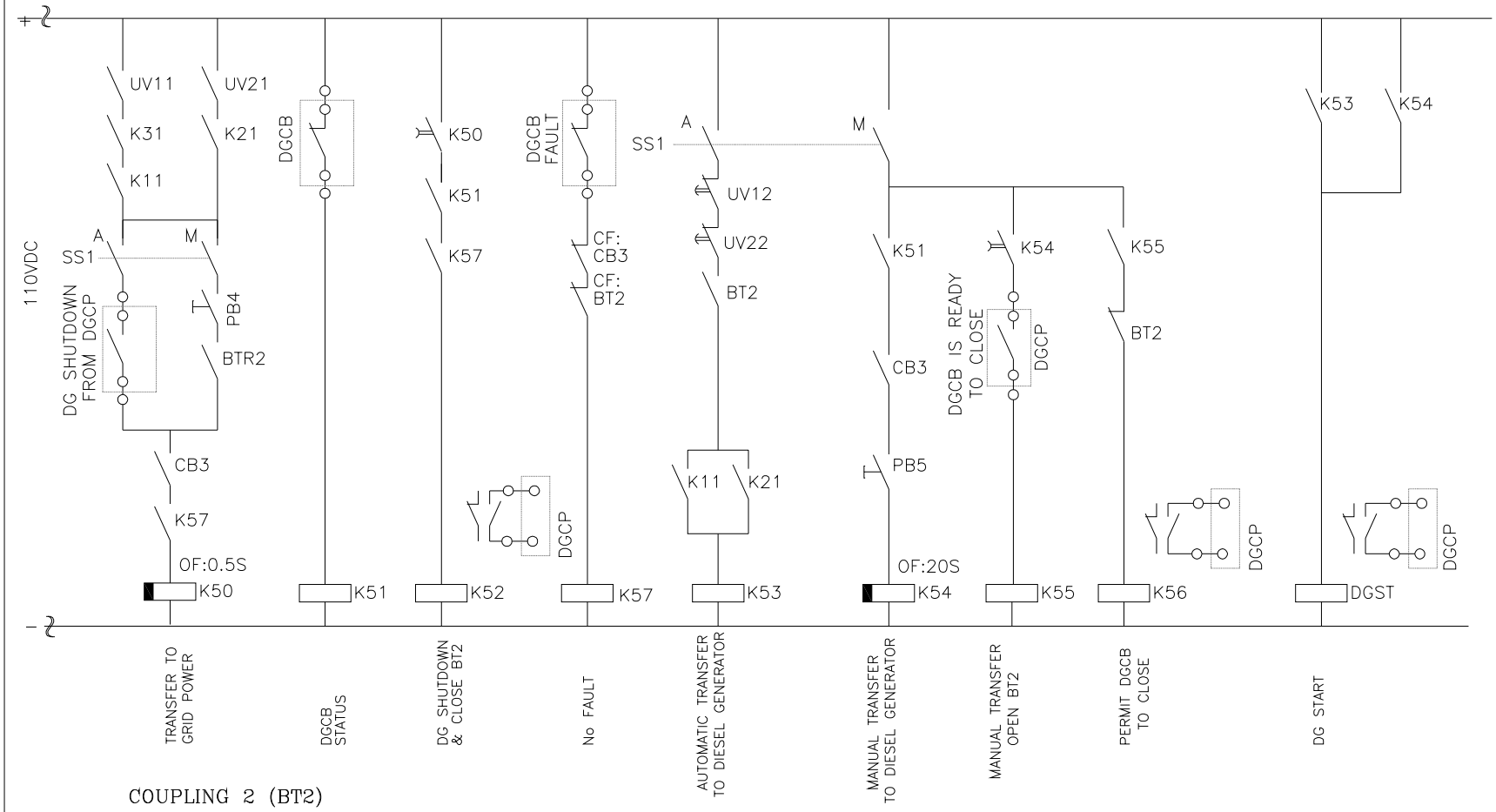

COUPLING 2 (BT2)

NOTES

LEGEND

REFERENCE DRAWING	DRG. No.
LV SWITCHGEAR/MCC SINGLE LINE DIAGRAM	BK-GCS-PEDCO-120-EL-SL-0002
CONTROL LOGIC DIAGRAM FOR LV INCOMERS & BUS TIE	BK-GCS-PEDCO-120-EL-LD-0001
ELECTRICAL OVERALL SINGLE LINE DIAGRAM	BK-GCS-PEDCO-120-EL-SL-0001

KEY PLAN

REV.	DATE	P.O.I.S	PREP.	CHK.	APP.	AUT.
D03	JUL.2022	IFI	H.SHAKERA	M.PAKNIAHRAN	M.MEHRERNAD	**.**
D02	MAY.2022	IFI	H.SHAKERA	M.PAKNIAHRAN	M.MEHRERNAD	**.**
D01	APR.2022	IFI	H.SHAKERA	M.PAKNIAHRAN	M.MEHRERNAD	**.**
D00	DEC.2021	IFI	H.SHAKERA	M.PAKNIAHRAN	M.MEHRERNAD	**.**

REV.	DESCRIPTION	CHECKED BY	CHECKED DATE	REV. APPR. BY	REV. APPR. DATE
***	**********	**.**	***.****	**.**	***.****

PROJECT NAME: BINAK OILFIELD DEVELOPMENT/SURFACE FACILITIES GAS COMPRESSOR STATION

PROJECT NO.: 971020

EPC CONTRACTOR: HIRGAN ENERGY – DESIGN & INSPECTION COMPANIES

EPD/EPC CONTRACTOR (GC): PETROIRAN DEVELOPMENT COMPANY (PEDCO)

اصل و کلیه نسخ این نقشه و حق اختراعی متعلق به شرکت ملی مناطق نفت خیز جنوب میباشد.

THE ORIGINAL AND ALL COPIES OF THIS DRAWING TOGETHER WITH THE COPYRIGHT THEREIN ARE THE SOLE PROPERTY OF N.I.S.O.C./ FIELDS

BINAK OILFIELD DEVELOPMENT SURFACE FACILITIES GAS COMPRESSOR STATION

DATE	SCALE	DRAWING BY	CHECKED BY	PROJECT ENG.

NO CONSTRUCTION PERMITTED UNLESS DRAWING APPROVED

APPROVED FOR CONSTRUCTION BY: DATE:

(VENDOR TITLE BLOCK)**

DRAWING TITLE: ELECTRICAL TYPICAL SCHEMATIC DIAGRAMS FOR LV PANEL

SCALE	SIZE	DRAWING NO.	SHEET NO.	REV.
NTS	A3	BK-GCS-PEDCO-120-EL-DG-0002	29 OF 30	D03

BUDGET REF.	LOCATION	SIZE	CLASS	SERIAL NO.	SHEET	REVISION
063-073-9184	F	2	P	709041	29 OF 30	D03

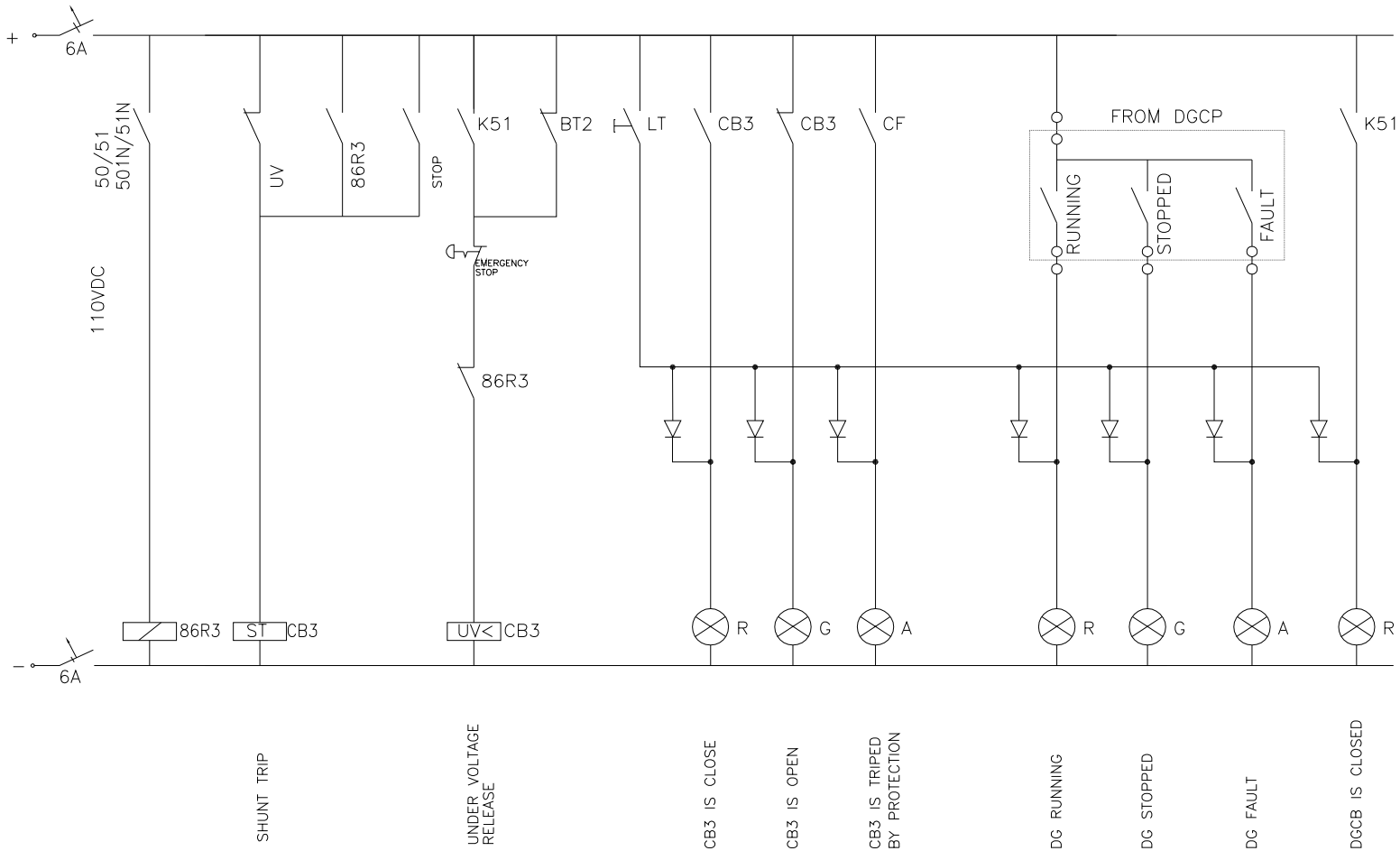

INCOMING 3 (CB3)

NOTES

LEGEND

REFERENCE DRAWING	DRG. No.
LV SWITCHGEAR/MCC SINGLE LINE DIAGRAM	BK-GCS-PEDCO-120-EL-SL-0002
CONTROL LOGIC DIAGRAM FOR LV INCOMERS & BUS TIE	BK-GCS-PEDCO-120-EL-LD-0001
ELECTRICAL OVERALL SINGLE LINE DIAGRAM	BK-GCS-PEDCO-120-EL-SL-0001

KEY PLAN

REV.	DATE	P.O.I.S	PREP.	CHK.	APP.	AUT.
D03	JUL.2022	IFI	H.SHAKERA	M.PAKNAHAN	M.MEHRERNAD	**.**
D02	MAY.2022	IFI	H.SHAKERA	M.PAKNAHAN	M.MEHRERNAD	**.**
D01	APR.2022	IFI	H.SHAKERA	M.PAKNAHAN	M.MEHRERNAD	**.**
D00	DEC.2021	IFI	H.SHAKERA	M.PAKNAHAN	M.MEHRERNAD	**.**

REV.	DESCRIPTION	CHECKED BY	CHECKED DATE	REV. APPR. BY	REV. APPR. DATE
***	**********	**.**	***.****	**.**	***.****

PROJECT NAME: BINAK OILFIELD DEVELOPMENT/SURFACE FACILITIES GAS COMPRESSOR STATION

PROJECT NO.: 971020

EPC CONTRACTOR: HIRGAN ENERGY – DESIGN & INSPECTION COMPANIES

EPD/EPC CONTRACTOR (GC): PETROIRAN DEVELOPMENT COMPANY (PEDCO)

اصل و کلیه نسخ این نقشه و حق اختراعی متعلق به شرکت ملی مناطق نفت خیز جنوب میباشد.
THE ORIGINAL AND ALL COPIES OF THIS DRAWING TOGETHER WITH THE COPYRIGHT THEREIN ARE THE SOLE PROPERTY OF N.I.S.O.C./ FIELDS

BINAK OILFIELD DEVELOPMENT
SURFACE FACILITIES
GAS COMPRESSOR STATION

DATE	SCALE	DRAWING BY	CHECKED BY	PROJECT ENG.

(VENDOR TITLE BLOCK)**

DRAWING TITLE: ELECTRICAL TYPICAL SCHEMATIC DIAGRAMS FOR LV PANEL

NO CONSTRUCTION PERMITTED UNLESS DRAWING APPROVED

APPROVED FOR CONSTRUCTION BY: DATE:

SCALE	SIZE	DRAWING NO.	SHEET NO.	REV.	BUDGET REF.	LOCATION	SIZE	CLASS	SERIAL NO.	SHEET	REVISION
NTS	A3	BK-GCS-PEDCO-120-EL-DG-0002	30 OF 30	D03	063-073-9184	F	2	P	709041	30 OF 30	D03