طرح نگهداشت و افزایش تولید ۲۷ مخزن

Standard Detail Drawing for Pressure Vessels and Heat Exchangers

نگهداشت و افزایش تولید میدان نفتی بینک

D00	JUL. 2021	IFI	M.Asgharnejad	M.Fakharian	Sh.Ghalikar	
Rev.	**Date**	**Purpose of Issue/Status**	**Prepared by:**	**Checked by:**	**Approved by:**	**COMPANY Approval**

Class: 4 | **COMPANY Doc. Number:**

Status:

IDC: Inter-Discipline Check
IFC: Issued For Comment
IFA: Issued For Approval
AFD: Approved For Design
AFC: Approved For Construction
AFP: Approved For Purchase
AFQ: Approved For Quotation
IFI: Issued For Information
AB-R: As-Built for COMPANY Review
AB-A: As-Built –Approved

REVISION RECORD SHEET

PAGE	D00	D01	D02	D03	D04
1	X				
2	X				
3	X				
4	X				
5	X				
6	X				
7	X				
8	X				
9	X				
10	X				
11	X				
12	X				
13	X				
14	X				
15	X				
16	X				
17	X				
18	X				
19	X				
20	X				
21	X				
22	X				
23	X				
24	X				
25	X				
26	X				
27	X				
28	X				
29	X				
30	X				
31	X				
32	X				
33	X				
34	X				
35	X				
36	X				
37	X				
38	X				
39	X				
40	X				
41	X				
42	X				
43	X				
44	X				
45	X				
46	X				
47	X				
48	X				
49	X				
50	X				
51	X				
52	X				
53	X				
54	X				
55	X				
56					
57					
58					
59					
60					
61					
62					
63					
64					
65					

PAGE	D00	D01	D02	D03	D04
66					
67					
68					
69					
70					
71					
72					
73					
74					
75					
76					
77					
78					
79					
80					
81					
82					
83					
84					
85					
86					
87					
88					
89					
90					
91					
92					
93					
94					
95					
96					
97					
98					
99					
100					
101					
102					
103					
104					
105					
106					
107					
108					
109					
110					
111					
112					
113					
114					
115					
116					
117					
118					
119					
120					
121					
122					
123					
124					
125					
126					
127					
128					
129					
130					

CONTENTS

1.0 INTRODUCTION 4

2.0 SCOPE 4

3.0 NORMATIVE REFERENCES 5

3.1 LOCAL CODES AND STANDARDS 5
3.2 INTERNATIONAL CODES AND STANDARDS 5
3.3 THE PROJECT DOCUMENTS 6

STANDARD DRAWINGS 7

1.0 INTRODUCTION

Binak oilfield in Bushehr province, a part of the southern oilfields of Iran, is located 20 km northwest of Genaveh city.

With the aim of increasing production of oil from Binak oilfield, an EPC/EPD Project has been defined by NIOC/NISOC and awarded to Petro Iran Development Company (PEDCO). Also PEDCO (as General Contractor) has assigned the EPC-packages of the Project to "Hirgan Energy - Design and Inspection" JV.

GENERAL DEFINITION

The following terms shall be used in this document.

COMPANY:	National Iranian South Oilfields Company (NISOC)
PROJECT:	Binak Oilfield Development – General Facilities
GENERAL CONTRACTOR (GC):	Petro Iran Development Company (PEDCO)
EPC CONTRACTOR:	Joint Venture of : Hirgan Energy – Design & Inspection(D&I) Companies
VENDOR:	The firm or person who will fabricate the equipment or material.
EXECUTOR:	Executor is the party which carries out all or part of construction and/or commissioning for the project.
THIRD PARTY INSPECTOR (TPI):	The firm appointed by EPC CONTRACTOR and approved by GC & COMPANY (in writing) for the inspection of goods.
SHALL:	Is used where a provision is mandatory.
SHOULD:	Is used where a provision is advisory only.
WILL:	Is normally used in connection with the action by COMPANY rather than by an EPC/EPD CONTRACTOR, supplier or VENDOR.
MAY:	Is used where a provision is completely discretionary.

2.0 SCOPE

The purpose of this document is to provide the standard drawings for the all accessories of press ure vessels and heat exchangers used in this project.

It shall be used in conjunction with data/requisition sheets for present document subject.

3.0 NORMATIVE REFERENCES

3.1 LOCAL CODES AND STANDARDS

- IPS-G-ME-150 — Iranian Petroleum Standard– Engineering & Material Standard for Towers , Reactors, Pressure vessels & Internals
- IPS-M-PI-130 — Iranian Petroleum Standard–Material & Equipment Standard for Pig Launching & Receiving Traps
- IPS-E-PI-240 — Iranian Petroleum Standard– Engineering Standard for Plant Piping Systems
- IPS-G-GN-210 — Iranian Petroleum Standard–General Standard for Packing & Packages
- IPS-E-CE-210 — Iranian Petroleum Standard–Engineering Standard for Steel Structures
- IPS Standard Drawings
  - IPS-D-ME-002 — Lifting Lug to Lift Vessels Up to 60 Tons
  - IPS-D-ME-003 — Lifting Lug to Lift Vessels Up to 200 Tons
  - IPS-D-ME-010 — Vertical Vessels Support Skirt
  - IPS-D-ME-011 — Support Leg and Base
  - IPS-D-ME-030 — Vortex Breaker
  - IPS-D-ME-031 — Baffle for Column and Drum
  - IPS-D-ME-042 — Hinge & Davit Details Manholes
  - IPS-D-ME-100 — Nameplate for Pressure Vessels
  - IPS-D-ME-101 — Nameplate & Name Plate Holder for Heat Exchanger
  - IPS-D-ME-104 — Saddle Details for Horizontal Vessels
  - IPS-D-ME-200 — Typical Details Vessels Ladders & Platforms

3.2 INTERNATIONAL CODES AND STANDARDS

- ASME — American Society of Mechanical Engineers
  - Sec .VIII — Rules for Construction of Pressure Vessels-Design
  - B 31.3 — Chemical Plant and Petroleum Refinery Piping
  - B 31.8 — Gas Transportation & Distribution Piping Systems
  - B 31.8 — Gas Transportation & Distribution Piping Systems

- B 16.5 — Pipe Flanges and Flanged Fittings NPS 1/2 Through NPS 24
- B 16.9 — Steel Butt Welding Fitting
- B 16.11 — Forged Steel Fittings
- B 16.20 — Metallic Gaskets for Pipe Flanges – Ring Joint Gaskets, Spiral Wound and Jacketed
- B 16.21 — Non- Metallic Gasket for Pipe Flanges
- B 16.47 — Large Diameter Steel Flanges NPS 26 Through NPS 60
- B 1.20.1 — Pipe Threads, General Purpose

- API 5L — Specification for Line Pipes
- AISC — Manual of Steel Construction

3.3 THE PROJECT DOCUMENTS

- BK-GNRAL-PEDCO-000-ME-SP-0001 — Specification for Pressure Vessels
- BK-GNRAL-PEDCO-000-PI-SP-XXXX — Specification for Insulation
- BK-GNRAL-PEDCO-000-PI-SP-0004 — Specification for Metallic Pipes
- BK-GNRAL-PEDCO-000-PI-SP-0005 — Specification for Fittings, Flanges, Gaskets and Bolts
- BK-GNRAL-PEDCO-000-PI-SP-0006 — Specification for Painting

STANDARD DRAWINGS

TITLE: SKIRT

TYPE I: BOLTS DIA. < 20 mm

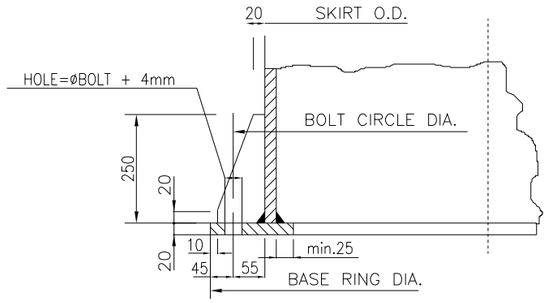

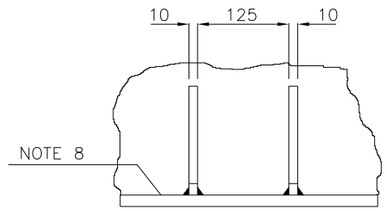

O.D. = OUTSIDE DIAMETER
W.L. = WELD LINE
T.L. = TANGENT LINE

TYPE II: BOLTS DIA. ≥ 24 mm

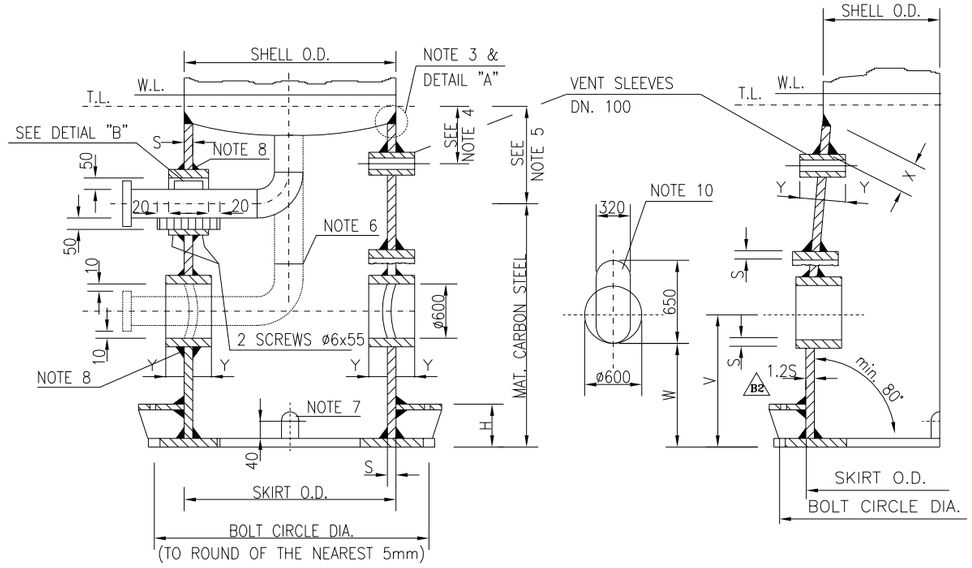

X= INSULATION THICKNESS + ~100 mm
Y= min. 50 mm, OR FIREPROOFING / INSULATION THICKNESS + 25 mm.

NOTES

1. ALL DIMENSIONS ARE IN MILLIMETERS UNLESS OTHERWISE STATED.
2. FOR ORIENTATION OF OPENINGS, MATERIAL OF SKIRT, BASEPLATE TYPE, FOUNDATION BOLT CIRCLE DIAMETER, AND VESSEL DIAMETER SEE ENGINEERING DATA SHEETS/DRAWINGS.
3. UPPER SKIRT O.D. SHALL BE THE SAME AS SHELL O.D. AT CONICAL SKIRTS, THE ANGLE BETWEEN BASE RING AND SHELL SHALL BE MORE THAN 80°. AS NOMINAL OUTSIDE DIAMETER SHALL BE CONSIDERED AS THE LARGEST ONE, i.e. AT THE BASE RING AND THE CENTER LINES OF THE SHELL PLATE OF THE VESSEL AND THAT OF THE SKIRT SHALL CUT EACH OTHER AT THE TANGENT LINE,-SEE DETAIL "A" AT PAGE 5.
4. SKIRT VENT SLEEVES RELEVANT MIN. DISTANCE FROM BOTTOM T.L. TO CLEAR BOTTOM HEAD INSULATION. THE SKIRT VENT SLEEVES TO BE POSITIONED APPROX. EQUAL. SPACED AROUND THE SKIRT TO CLEAR ALL ATTACHMENTS. FOR No. OFF SEE TABLE 1.
5. TOP PART OF SKIRT TO BE THE SAME MATERIAL AS VESSEL. RELEVANT LENGTH SEE ENGINEERING DATASHEET/DRAWING.
6. FLANGE CONNECTIONS AND VALVES INSIDE THE SKIRT SHOULD BE AVOIDED.
7. TWO WATER DRAINS ON CIRCUMFERENCE IN CASE FOUNDATION LEVEL INSIDE THE SKIRT FACES TOP OF THE BASE RING SHALL BE PROVIDED.
8. ALL FILLET WELDING SHALL BE CONTINUOUS TYPE WITH 0.7 OF THE THINNER THICKNESS OF THE PLATES WELDED TOGETHER.

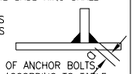

9. ACCESS HOLES TO STRADDLE CENTERLINES OF ANCHOR BOLTS, THEIR MINIMUM SIZES SHALL BE PROVIDED ACCORDING TO TABLE 1 AS FAR AS NOT BIGGER OPENING ARE NECESSARY FOR COMPONENT PARTS DISMOUNTABLY ARRANGED INSIDE THE SKIRT (LIKE ARMATURES, PIPING, COVERS, GASKETS, A.O.).
10. IN CASE OPERATING TEMPERATURE OF VESSEL IS LOWER THAN -20°C, WOODEN PILLOW SHALL BE PROVIDED FOR SLEEVE OPENING.

LEGEND

REFERENCE DRAWING	DRG. No.
**********	******

KEY PLAN

REV.	DESCRIPTION	BY	DATE	BY	DATE
***	**********	**.**	***.****	**.**	***.****
		CHECKED		REV. APPR.	

REV.	DATE	P.O.I.S	PREP.	CHK.	APP.	AUT.
D00	JUL.2021	IFI	M.Asgharnejad	M.Fakharian	Sh.Ghalikar	**.**

PROJECT NAME: BINAK OILFIELD DEVELOPMENT SURFACE WORK PACKAGES GENERAL

PROJECT NO.: 971020

EPC CONTRACTOR: HIRGAN ENERGY – DESIGN & INSPECTION COMPANIES

GENERAL CONTRACTOR: PETROIRAN DEVELOPMENT COMPANY (PEDCO)

BINAK OILFIELD DEVELOPMENT SURFACE WORK PACKAGES GENERAL

DATE	SCALE	DRAWING BY	CHECKED BY	PROJECT ENG.

(VENDOR TITLE BLOCK)**

DRAWING TITLE: STANDARD DETAIL DRAWING FOR PRESSURE VESSELS AND HEAT EXCHANGERS (SKIRT)

NO CONSTRUCTION PERMITTED UNLESS DRAWING APPROVED

APPROVED FOR CONSTRUCTION | BY: | DATE:

SCALE	SIZE	DRAWING NO.	SHEET NO.	REV.	BUDGET REF.	LOCATION	SIZE	CLASS	SERIAL NO.	SHEET	REVISION
As Shown	A3	BK-GNRAL-PEDCO-000-ME-DW-0001	8 OF 55	D00							

طرح نگهداشت و افزایش تولید ۲۷ مخزن

Standard Detail Drawing for Pressure Vessels and Heat Exchangers

نگهداشت و افزایش تولید میدان نفتی بینک

D00	JUL. 2021	IFI	M.Asgharnejad	M.Fakharian	Sh.Ghalikar	
Rev.	**Date**	**Purpose of Issue/Status**	**Prepared by:**	**Checked by:**	**Approved by:**	**COMPANY Approval**

Class: 4 | **COMPANY Doc. Number:**

Status:

IDC: Inter-Discipline Check
IFC: Issued For Comment
IFA: Issued For Approval
AFD: Approved For Design
AFC: Approved For Construction
AFP: Approved For Purchase
AFQ: Approved For Quotation
IFI: Issued For Information
AB-R: As-Built for COMPANY Review
AB-A: As-Built –Approved

REVISION RECORD SHEET

PAGE	D00	D01	D02	D03	D04
1	X				
2	X				
3	X				
4	X				
5	X				
6	X				
7	X				
8	X				
9	X				
10	X				
11	X				
12	X				
13	X				
14	X				
15	X				
16	X				
17	X				
18	X				
19	X				
20	X				
21	X				
22	X				
23	X				
24	X				
25	X				
26	X				
27	X				
28	X				
29	X				
30	X				
31	X				
32	X				
33	X				
34	X				
35	X				
36	X				
37	X				
38	X				
39	X				
40	X				
41	X				
42	X				
43	X				
44	X				
45	X				
46	X				
47	X				
48	X				
49	X				
50	X				
51	X				
52	X				
53	X				
54	X				
55	X				
56					
57					
58					
59					
60					
61					
62					
63					
64					
65					

PAGE	D00	D01	D02	D03	D04
66					
67					
68					
69					
70					
71					
72					
73					
74					
75					
76					
77					
78					
79					
80					
81					
82					
83					
84					
85					
86					
87					
88					
89					
90					
91					
92					
93					
94					
95					
96					
97					
98					
99					
100					
101					
102					
103					
104					
105					
106					
107					
108					
109					
110					
111					
112					
113					
114					
115					
116					
117					
118					
119					
120					
121					
122					
123					
124					
125					
126					
127					
128					
129					
130					

CONTENTS

1.0 INTRODUCTION 4

2.0 SCOPE 4

3.0 NORMATIVE REFERENCES 5

3.1 LOCAL CODES AND STANDARDS 5
3.2 INTERNATIONAL CODES AND STANDARDS 5
3.3 THE PROJECT DOCUMENTS 6

STANDARD DRAWINGS 7

1.0 INTRODUCTION

Binak oilfield in Bushehr province, a part of the southern oilfields of Iran, is located 20 km northwest of Genaveh city.

With the aim of increasing production of oil from Binak oilfield, an EPC/EPD Project has been defined by NIOC/NISOC and awarded to Petro Iran Development Company (PEDCO). Also PEDCO (as General Contractor) has assigned the EPC-packages of the Project to "Hirgan Energy - Design and Inspection" JV.

GENERAL DEFINITION

The following terms shall be used in this document.

COMPANY:	National Iranian South Oilfields Company (NISOC)
PROJECT:	Binak Oilfield Development – General Facilities
GENERAL CONTRACTOR (GC):	Petro Iran Development Company (PEDCO)
EPC CONTRACTOR:	Joint Venture of : Hirgan Energy – Design & Inspection(D&I) Companies
VENDOR:	The firm or person who will fabricate the equipment or material.
EXECUTOR:	Executor is the party which carries out all or part of construction and/or commissioning for the project.
THIRD PARTY INSPECTOR (TPI):	The firm appointed by EPC CONTRACTOR and approved by GC & COMPANY (in writing) for the inspection of goods.
SHALL:	Is used where a provision is mandatory.
SHOULD:	Is used where a provision is advisory only.
WILL:	Is normally used in connection with the action by COMPANY rather than by an EPC/EPD CONTRACTOR, supplier or VENDOR.
MAY:	Is used where a provision is completely discretionary.

2.0 SCOPE

The purpose of this document is to provide the standard drawings for the all accessories of press ure vessels and heat exchangers used in this project.

It shall be used in conjunction with data/requisition sheets for present document subject.

3.0 NORMATIVE REFERENCES

3.1 LOCAL CODES AND STANDARDS

- IPS-G-ME-150 — Iranian Petroleum Standard– Engineering & Material Standard for Towers , Reactors, Pressure vessels & Internals
- IPS-M-PI-130 — Iranian Petroleum Standard–Material & Equipment Standard for Pig Launching & Receiving Traps
- IPS-E-PI-240 — Iranian Petroleum Standard– Engineering Standard for Plant Piping Systems
- IPS-G-GN-210 — Iranian Petroleum Standard–General Standard for Packing & Packages
- IPS-E-CE-210 — Iranian Petroleum Standard–Engineering Standard for Steel Structures
- IPS Standard Drawings
  - IPS-D-ME-002 — Lifting Lug to Lift Vessels Up to 60 Tons
  - IPS-D-ME-003 — Lifting Lug to Lift Vessels Up to 200 Tons
  - IPS-D-ME-010 — Vertical Vessels Support Skirt
  - IPS-D-ME-011 — Support Leg and Base
  - IPS-D-ME-030 — Vortex Breaker
  - IPS-D-ME-031 — Baffle for Column and Drum
  - IPS-D-ME-042 — Hinge & Davit Details Manholes
  - IPS-D-ME-100 — Nameplate for Pressure Vessels
  - IPS-D-ME-101 — Nameplate & Name Plate Holder for Heat Exchanger
  - IPS-D-ME-104 — Saddle Details for Horizontal Vessels
  - IPS-D-ME-200 — Typical Details Vessels Ladders & Platforms

3.2 INTERNATIONAL CODES AND STANDARDS

- ASME — American Society of Mechanical Engineers
  - Sec .VIII — Rules for Construction of Pressure Vessels-Design
  - B 31.3 — Chemical Plant and Petroleum Refinery Piping
  - B 31.8 — Gas Transportation & Distribution Piping Systems
  - B 31.8 — Gas Transportation & Distribution Piping Systems

- B 16.5 — Pipe Flanges and Flanged Fittings NPS 1/2 Through NPS 24
- B 16.9 — Steel Butt Welding Fitting
- B 16.11 — Forged Steel Fittings
- B 16.20 — Metallic Gaskets for Pipe Flanges – Ring Joint Gaskets, Spiral Wound and Jacketed
- B 16.21 — Non- Metallic Gasket for Pipe Flanges
- B 16.47 — Large Diameter Steel Flanges NPS 26 Through NPS 60
- B 1.20.1 — Pipe Threads, General Purpose

- API 5L — Specification for Line Pipes
- AISC — Manual of Steel Construction

3.3 THE PROJECT DOCUMENTS

- BK-GNRAL-PEDCO-000-ME-SP-0001 — Specification for Pressure Vessels
- BK-GNRAL-PEDCO-000-PI-SP-XXXX — Specification for Insulation
- BK-GNRAL-PEDCO-000-PI-SP-0004 — Specification for Metallic Pipes
- BK-GNRAL-PEDCO-000-PI-SP-0005 — Specification for Fittings, Flanges, Gaskets and Bolts
- BK-GNRAL-PEDCO-000-PI-SP-0006 — Specification for Painting

STANDARD DRAWINGS

TITLE: SKIRT (CONT'D)

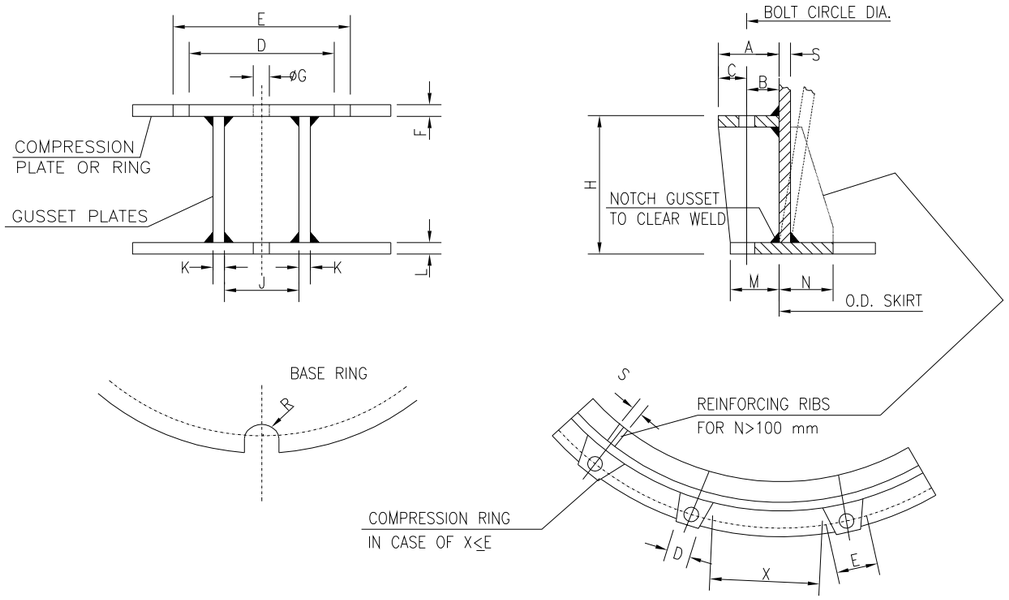

TABLE 2 BASE DIMENSIONS (IN mm)

BOLT DIA.	A	B	C	D	E	F*	G	H	J	K*	L*	M*	N*	R	V	W
M24	85	45	40	100	145	20	28	185	60	10	15	60	65	16	800	500
M30	95	50	45	110	160	25	35	245	70	10	20	70	80	20	800	500
M36	115	60	55	125	185	30	42	255	75	12	25	80	90	24	800	500
M42	125	65	60	140	205	35	48	315	85	14	30	90	100	27	950	650
M48	155	80	75	150	230	35	56	315	100	14	30	105	105	32	950	650
M56	175	90	85	175	260	40	66	375	110	18	35	120	110	38	1050	750
M64	195	100	95	190	290	45	74	385	120	18	40	130	120	42	1050	750
M72	225	115	110	210	330	50	82	445	140	20	45	145	155	46	1050	750
M80	245	125	120	230	360	55	91	455	150	25	50	165	185	53	1050	750

NOTE: DIMENSIONS MARKED WITH ASTERISK SHALL TO BE CONFIRMED BY MANUFACTURER.

NOTES

1. ALL DIMENSIONS ARE IN MILLIMETERS UNLESS OTHERWISE STATED.
2. FOR ORIENTATION OF OPENINGS, MATERIAL OF SKIRT, BASEPLATE TYPE, FOUNDATION BOLT CIRCLE DIAMETER, AND VESSEL DIAMETER SEE ENGINEERING DATA SHEETS/DRAWINGS.
3. UPPER SKIRT O.D. SHALL BE THE SAME AS SHELL O.D. AT CONICAL SKIRTS, THE ANGLE BETWEEN BASE RING AND SHELL SHALL BE MORE THAN 80°, AS NOMINAL OUTSIDE DIAMETER SHALL BE CONSIDERED AS THE LARGEST ONE, i.e. AT THE BASE RING AND THE CENTER LINES OF THE SHELL PLATE OF THE VESSEL AND THAT OF THE SKIRT SHALL CUT EACH OTHER AT THE TANGENT LINE.-SEE DETAIL "A" AT PAGE 5.
4. SKIRT VENT SLEEVES RELEVANT MIN. DISTANCE FROM BOTTOM T.L. TO CLEAR BOTTOM HEAD INSULATION. THE SKIRT VENT SLEEVES TO BE POSITIONED APPROX. EQUAL. SPACED AROUND THE SKIRT TO CLEAR ALL ATTACHMENTS. FOR No. OFF SEE TABLE 1.
5. TOP PART OF SKIRT TO BE THE SAME MATERIAL AS VESSEL. RELEVANT LENGTH SEE ENGINEERING DATASHEET/DRAWING.
6. FLANGE CONNECTIONS AND VALVES INSIDE THE SKIRT SHOULD BE AVOIDED.
7. TWO WATER DRAINS ON CIRCUMFERENCE IN CASE FOUNDATION LEVEL INSIDE THE SKIRT FACES TOP OF THE BASE RING SHALL BE PROVIDED.
8. ALL FILLET WELDING SHALL BE CONTINUOUS TYPE WITH 0.7 OF THE THINNER THICKNESS OF THE PLATES WELDED TOGETHER.

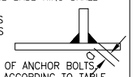

9. ACCESS HOLES TO STRADDLE CENTERLINES OF ANCHOR BOLTS, THEIR MINIMUM SIZES SHALL BE PROVIDED ACCORDING TO TABLE 1 AS FAR AS NOT BIGGER OPENING ARE NECESSARY FOR COMPONENT PARTS DISMOUNTABLY ARRANGED INSIDE THE SKIRT (LIKE ARMATURES, PIPING, COVERS, GASKETS, A.O.).
10. IN CASE OPERATING TEMPERATURE OF VESSEL IS LOWER THAN -20°C, WOODEN PILLOW SHALL BE PROVIDED FOR SLEEVE OPENING.

LEGEND

REFERENCE DRAWING	DRG. No.
**********	******

KEY PLAN

REV.	DESCRIPTION	BY	DATE	BY	DATE
***	**********	**.**	***.****	**.**	***.****
		CHECKED		REV. APPR.	

REV.	DATE	P.O.I.S	PREP.	CHK.	APP.	AUT.
D00	JUL.2021	IFI	M.Asgharnejad	M.Fakharian	Sh.Ghalikar	**.**

PROJECT NAME: BINAK OILFIELD DEVELOPMENT SURFACE WORK PACKAGES GENERAL

PROJECT NO.: 971020

EPC CONTRACTOR: HIRGAN ENERGY – DESIGN & INSPECTION COMPANIES

SPECIFIED CONTRACTOR: PETROIRAN DEVELOPMENT COMPANY (PEDCO)

BINAK OILFIELD DEVELOPMENT SURFACE WORK PACKAGES GENERAL

DATE	SCALE	DRAWING BY	CHECKED BY	PROJECT ENG.

NO CONSTRUCTION PERMITTED UNLESS DRAWING APPROVED

APPROVED FOR CONSTRUCTION BY: DATE:

(VENDOR TITLE BLOCK)**

DRAWING TITLE: STANDARD DETAIL DRAWING FOR PRESSURE VESSELS AND HEAT EXCHANGERS (SKIRT)

SCALE	SIZE	DRAWING NO.	SHEET NO.	REV.
As Shown	A3	BK-GNRAL-PEDCO-000-ME-DW-0001	9 OF 56	D00

BUDGET REF.	LOCATION	SIZE	CLASS	SERIAL NO.	SHEET	REVISION

TITLE: SKIRT (CONT'D)

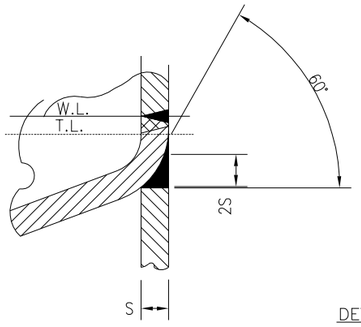

DETAIL "A"

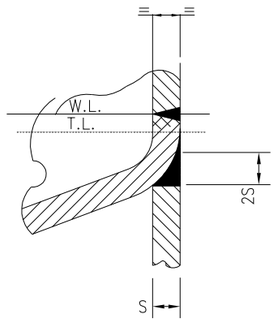

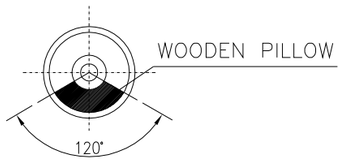

HOT SERVICE

DETAIL "B"

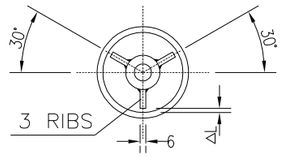

COLD SERVICE

CLEARANCE $\Delta L = L.\alpha.\ \Delta T$

α = COEFFICIENT OF THERMAL EXPANSION (mm/mm°C)

ΔT = TEMPERATURE DIFFERENCE (°C)

L = NOZZLE LENGTH FROM BOTTOM T.L.(mm.)

TABLE 1 SKIRT OPENINGS

VESSEL O.D. mm	ACCESS HOLES		REQ'D. VENT NO. OFF	
	QTY.	WIDTH, I.D. mm	HOT	COLD
<950	1	650x320	2	2
951–1200	1	600 ø	3	2
1201–1500	1	600 ø	4	2
1501–3300	2	600 ø	4	2
3301–4500	2	600 ø	6	4
4501–5800	2	600 ø	8	4
>5801	2	600 ø	10	4

NOTES

1. ALL DIMENSIONS ARE IN MILLIMETERS UNLESS OTHERWISE STATED.
2. FOR ORIENTATION OF OPENINGS, MATERIAL OF SKIRT, BASEPLATE TYPE, FOUNDATION BOLT CIRCLE DIAMETER, AND VESSEL DIAMETER SEE ENGINEERING DATA SHEETS/DRAWINGS.
3. UPPER SKIRT O.D. SHALL BE THE SAME AS SHELL O.D. AT CONICAL SKIRTS, THE ANGLE BETWEEN BASE RING AND SHELL SHALL BE MORE THAN 80°. AS NOMINAL OUTSIDE DIAMETER SHALL BE CONSIDERED AS THE LARGEST ONE, i.e. AT THE BASE RING AND THE CENTER LINES OF THE SHELL PLATE OF THE VESSEL AND THAT OF THE SKIRT SHALL CUT EACH OTHER AT THE TANGENT LINE,-SEE DETAIL "A" AT PAGE 5.
4. SKIRT VENT SLEEVES RELEVANT MIN. DISTANCE FROM BOTTOM T.L. TO CLEAR BOTTOM HEAD INSULATION. THE SKIRT VENT SLEEVES TO BE POSITIONED APPROX. EQUAL SPACED AROUND THE SKIRT TO CLEAR ALL ATTACHMENTS. FOR No. OFF SEE TABLE 1.
5. TOP PART OF SKIRT TO BE THE SAME MATERIAL AS VESSEL. RELEVANT LENGTH SEE ENGINEERING DATASHEET/DRAWING.
6. FLANGE CONNECTIONS AND VALVES INSIDE THE SKIRT SHOULD BE AVOIDED.
7. TWO WATER DRAINS ON CIRCUMFERENCE IN CASE FOUNDATION LEVEL INSIDE THE SKIRT FACES TOP OF THE BASE RING SHALL BE PROVIDED.
8. ALL FILLET WELDING SHALL BE CONTINUOUS TYPE WITH 0.7 OF THE THINNER THICKNESS OF THE PLATES WELDED TOGETHER.

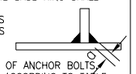

9. ACCESS HOLES TO STRADDLE CENTERLINES OF ANCHOR BOLTS, THEIR MINIMUM SIZES SHALL BE PROVIDED ACCORDING TO TABLE 1 AS FAR AS NOT BIGGER OPENING ARE NECESSARY FOR COMPONENT PARTS DISMOUNTABLY ARRANGED INSIDE THE SKIRT (LIKE ARMATURES, PIPING, COVERS, GASKETS, A.O.).
10. IN CASE OPERATING TEMPERATURE OF VESSEL IS LOWER THAN −20°C, WOODEN PILLOW SHALL BE PROVIDED FOR SLEEVE OPENING.

LEGEND

REFERENCE DRAWING	DRG. No.
**********	******

KEY PLAN

REV.	DATE	P.O.I.S	PREP.	CHK.	APP.	AUT.
D00	JUL.2021	IFI	M.Asgharnejad	M.Fakharian	Sh.Ghalikar	**.**

REV.	DESCRIPTION	BY	DATE	BY	DATE
		CHECKED		REV. APPR.	
***	**********	**.**	***.****	**.**	***.****

PROJECT NAME: BINAK OILFIELD DEVELOPMENT SURFACE WORK PACKAGES GENERAL

PROJECT NO.: 971020

EPC CONTRACTOR: HIRGAN ENERGY – DESIGN & INSPECTION COMPANIES

SPECIFIED CONTRACTOR: PETROIRAN DEVELOPMENT COMPANY (PEDCO)

BINAK OILFIELD DEVELOPMENT SURFACE WORK PACKAGES GENERAL

DATE	SCALE	DRAWING BY	CHECKED BY	PROJECT ENG.

(VENDOR TITLE BLOCK)**

DRAWING TITLE: STANDARD DETAIL DRAWING FOR PRESSURE VESSELS AND HEAT EXCHANGERS (SKIRT)

SCALE	SIZE	DRAWING NO.	SHEET NO.	REV.
As Shown	A3	BK-GNRAL-PEDCO-000-ME-DW-0001	10 OF 55	D00

NO CONSTRUCTION PERMITTED UNLESS DRAWING APPROVED

APPROVED FOR CONSTRUCTION BY: DATE:

BUDGET REF.	LOCATION	SIZE	CLASS	SERIAL NO.	SHEET	REVISION

TITLE: SADDLE

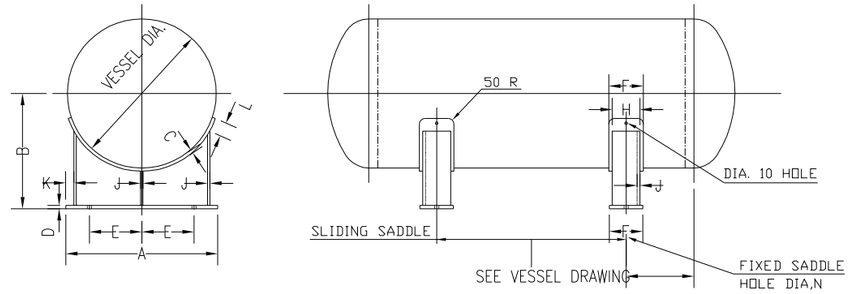

ANCHOR BOLT SIZE	SLOTTED HOLE	
	WIDTH	LENGTH
3/4"	22	38
7/8"	30	48

TYPE I

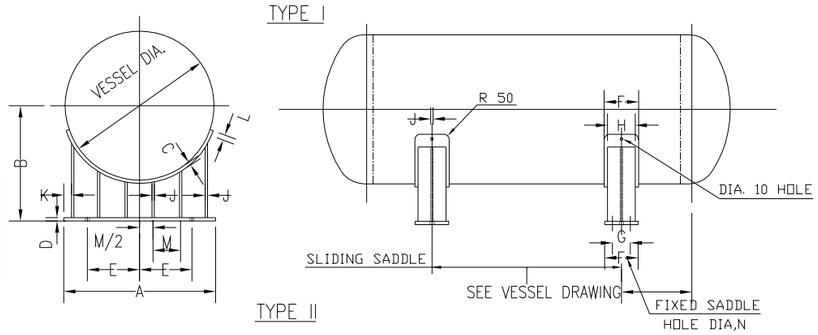

ANCHOR BOLT SIZE	SLOTTED HOLE	
	WIDTH	LENGTH
7/8"	30	50
1"	32	45
1 1/8"	35	58

TYPE II

	VESSEL DIA.	A	B	C	D	E	F	G	H	J	K	L	M	BOLT SIZE	HOLE DIA.(N)	SIZE OF WELD	WT.FOR ONE PAIR (KG)
TYPE I	405	355	405	6	10	115	150	–	100	10	12	75	–	M20	22	6	42
	460	405	430	6	12	140	150	–	100	10	12	75	–	M20	22	6	50
	510	460	460	6	12	165	175	–	130	10	12	75	–	M20	22	6	58
	610	535	535	6	12	200	175	–	130	10	12	75	–	M20	22	6	74
	685	610	570	6	12	230	175	–	130	10	12	75	–	M20	22	6	88
	760	685	610	6	12	255	175	–	130	12	12	75	–	M20	22	6	101
	840	760	650	6	12	280	175	–	130	12	12	75	–	M20	22	6	114
	915	840	685	6	12	315	175	–	130	12	12	75	–	M20	22	6	128
	990	915	725	6	12	365	175	–	130	12	12	75	–	M20	22	6	143
	1065	990	760	6	12	395	175	–	130	12	12	75	–	M20	22	6	157
	1145	1065	800	6	16	430	175	–	130	12	12	75	–	M24	28	6	171
TYPE II	1220	1085	815	12	16	455	230	115	190	12	12	75	205	M24	28	6	221
	1295	1140	850	12	16	480	230	115	190	12	12	75	220	M24	28	6	265
	1370	1240	890	12	16	535	230	115	190	12	12	75	240	M24	28	6	279
	1450	1290	930	12	16	560	230	115	190	12	12	75	250	M24	28	6	294
	1525	1340	965	12	16	585	230	115	190	12	12	75	260	M24	28	6	311
	1600	1415	1005	12	16	610	230	115	190	12	12	75	275	M24	28	6	326
	1675	1490	1040	12	16	635	230	115	190	12	12	100	290	M24	28	6	344
	1755	1585	1080	12	16	660	230	115	190	12	12	100	305	M24	28	6	362
	1830	1615	1120	12	16	710	230	115	190	12	12	100	315	M24	28	8	382
	1905	1690	1155	12	16	735	230	115	190	12	12	100	330	M24	28	8	404
	1980	1740	1155	12	16	760	230	125	205	12	12	100	340	M24	28	8	426
	2135	1890	1270	12	20	815	230	125	205	16	12	125	370	M24	28	8	600
	2285	1990	1345	16	20	865	230	125	205	16	12	125	390	M24	28	8	624
	2440	2140	1425	16	20	940	230	125	205	16	12	125	420	M24	28	8	653
	2590	2290	1500	16	20	990	230	125	205	16	12	150	450	M24	28	8	695
	2745	2415	1575	16	20	1065	255	150	230	16	12	150	475	M24	28	8	738
	2895	2540	1650	16	20	1120	255	150	230	16	12	150	500	M24	28	10	810
	3050	2665	1725	16	20	1170	255	150	230	16	12	180	525	M24	28	10	903
	3200	2790	1805	16	20	1220	300	175	255	16	12	180	550	M30	34	10	1071
	3355	2920	1880	20	20	1270	300	175	255	20	12	180	575	M30	34	10	1254
	3505	3045	1995	20	20	1320	300	175	255	20	12	205	600	M30	34	10	1353
	3655	3195	2030	20	20	1370	300	175	255	20	12	205	630	M30	34	10	1460

NOTES

1- IN CASE OF CONFLICT, VESSEL DRAWING GOVERNS.
2- ALL WELDS TO BE CONTINUOUS FILLETS WITH MINIMUM 2 RUNS FOR WELDS GREATER THAN 6mm.
3- FOR MATERIAL OF CONSTRUCTION SEE VESSEL DRAWING.
4- ALL DIMENSIONS ARE IN MILLIMETERS UNLESS OTHERWISE STATED.
5- FOR INTERMEDIATE VESSEL DIAMETERS USE THE NEXT SIZE.

LEGEND

REFERENCE DRAWING	DRG. No.
**********	******

KEY PLAN

REV.	DESCRIPTION	BY	DATE	BY	DATE
***	**********	**.**	***.****	**.**	***.****
		CHECKED		REV. APPR.	

REV.	DATE	P.O.I.S	PREP.	CHK.	APP.	AUT.
D00	JUL.2021	IFI	M.Jaghamejad	M.Fakharian	Sh.Ghalikar	**.**

PROJECT NAME: BINAK OILFIELD DEVELOPMENT SURFACE WORK PACKAGES GENERAL

PROJECT NO.: 971020

EPC CONTRACTOR: HIRGAN ENERGY – DESIGN & INSPECTION COMPANIES

GENERAL CONTRACTOR: PEDCO — PETROIRAN DEVELOPMENT COMPANY

BINAK OILFIELD DEVELOPMENT
SURFACE WORK PACKAGES
GENERAL

DATE	SCALE	DRAWING BY	CHECKED BY	PROJECT ENG.

(VENDOR TITLE BLOCK)**

DRAWING TITLE: STANDARD DETAIL DRAWING FOR PRESSURE VESSELS AND HEAT EXCHANGERS (SADDLE)

SCALE	SIZE	DRAWING NO.	SHEET NO.	REV.
As Shown	A3	BK-GNRAL-PEDCO-000-ME-DW-0001	11 OF 66	D00

NO CONSTRUCTION PERMITTED UNLESS DRAWING APPROVED

APPROVED FOR CONSTRUCTION BY: DATE:

BUDGET REF.	LOCATION	SIZE	CLASS	SERIAL NO.	SHEET	REVISION

TITLE: LEG

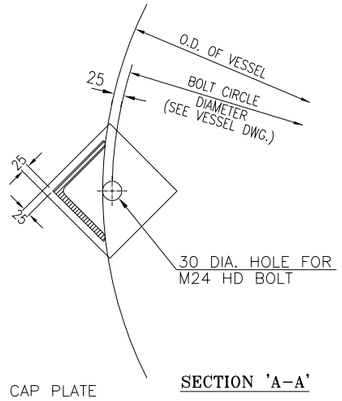

SECTION 'A-A'

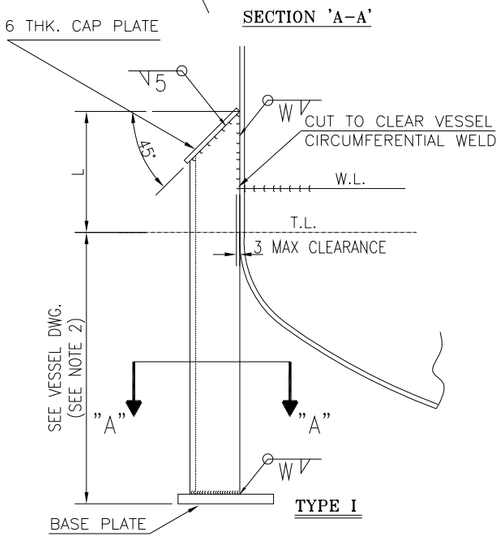

TYPE I

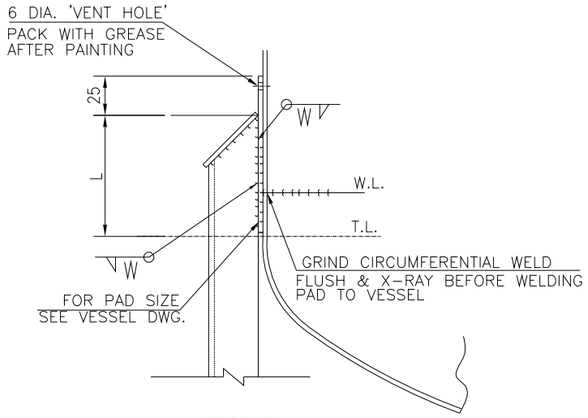

TYPE II

O.D. OF VESSEL	ANGLE LEG SIZE	QTY.	BASE PLATE SIZE	DIMENSION 'L'	DIMENSION 'W'
UP TO 600	60X60X6	3	120X120X12	150	6
600-750	80X80X8	3	135X135X12	150	6
750-1000	80X80X8	4	135X135X12	150	6
1000-1500	100X100X10	4	135X135X12	150	8
1500-2000	120X120X12	4	150X150X12	250	10
2000-2500	150X150X15	4	200X200X20	300	12
ABOVE 2500	USE SKIRT TYPE CONSTRUCTION				

NOTES

1- MATERIAL OF CONSTRUCTION AS SPECIFIED ON VESSEL DWG.
2- STRENGTH AND STABILITY OF LEGS TO BE VERIFIED BY CALCULATION
3- IN CASE OF CONFLICT, VESSEL DRAWING GOVERNS.
4- ALL DIMENSIONS ARE IN MILLIMETERS UNLESS OTHERWISE STATED.
5- PAD MATERIAL SHALL BE THE SAME AS THE VESSEL.

LEGEND

REFERENCE DRAWING	DRG. No.
**********	******

KEY PLAN

REV.	DESCRIPTION	BY	DATE	BY	DATE
***	**********	**.**	***.****	**.**	***.****
		CHECKED		REV. APPR.	

REV.	DATE	P.O.I.S	PREP.	CHK.	APP.	AUT.
D00	JUL.2021	IFI	M.Jaghernejad	M.Fakharian	Sh.Ghalikar	**.**

PROJECT NAME: BINAK OILFIELD DEVELOPMENT SURFACE WORK PACKAGES GENERAL

PROJECT NO.: 971020

EPC CONTRACTOR: HIRGAN ENERGY – DESIGN & INSPECTION COMPANIES

SPONSERD CONTRACTOR: PETROIRAN DEVELOPMENT COMPANY (PEDCO)

BINAK OILFIELD DEVELOPMENT SURFACE WORK PACKAGES GENERAL

DATE	SCALE	DRAWING BY	CHECKED BY	PROJECT ENG.

(VENDOR TITLE BLOCK)**

DRAWING TITLE: STANDARD DETAIL DRAWING FOR PRESSURE VESSELS AND HEAT EXCHANGERS (LEG)

NO CONSTRUCTION PERMITTED UNLESS DRAWING APPROVED

APPROVED FOR CONSTRUCTION BY: DATE:

SCALE	SIZE	DRAWING NO.	SHEET NO.	REV.
As Shown	A3	BK-GNRAL-PEDCO-000-ME-DW-0001	12 OF 56	D00

BUDGET REF.	LOCATION	SIZE	CLASS	SERIAL NO.	SHEET	REVISION

TITLE: SUPPORT LUG FOR VERTICAL VESSELS

– APPLICATION

FOR VERTICAL NON–INSULATED AND INSULATED VESSELS WITH THICKNESS UP TO 150 mm MAX. PLACED ON STEEL OR CONCRETE STRUCTURES. BEYOND THE LOAD LIMITS PER BRACKET AS IN THE STANDARD, SUPPORT BRACKETS SHALL BE CONSTRUCTED TO INDIVIDUAL DESIGN DUE TO ECONOMICAL REASONS.

– SELECTION

TYPE OF SUPPORT BRACKETS SHALL BE SELECTED ACCRORDING TO PERMISSIBLE LOAD FOR ONE BRACKET – TABLE 2, QUANTITY OF BRACKETS AS PER TABLE 1. FOR INSULATED VESSEL WITH 4 BRACKETS LOOSE POINT EXECUTION BRACKETS SHALL BE CONSIDERED.

TABLE 1: REQUIRED QUANTITY OF SUPPORT BRACKETS

VESSEL DIA. D (mm)	RATIO L/D	QUANTITY REQUIRED	NOTES
≤ 800	< 4	2	VESSEL
≤ 800	> 4	2/4*	VESSEL
> 800	ALL	4	VESSEL
> 800	ALL	4	VESSEL WITH AGITATOR OR COLUMN

L= LENGTH BETWEEN TANGENT LINES.
*= QUANTITY TO BE FIXED AND INDICATED IN ENGINEERING DATA SHEET.

– DIMENSIONS

SEE TABLE 2.

– MATERIALS

PART 1: SAME MATERIAL AS VESSEL SHELL

PARTS 2 & 3: CARBON STEEL (MIN.QUALITY ST37–2 OR EQUIVALENT)

– WELDS

ALL WELDS SHALL BE CONTINUOUS.

– STRESS ANALYSIS

MANUFACTURER SHALL PERFORM A STRESS ANALYSIS FOR SUPPORT BRACKETS AND VESSEL SHELL.
IF NECESSARY, SUPPORT BRACKETS SHALL BE REINFORCED , WITHOUT ANY MODIFICATION TO THE DIMENSIONS OF FOUNDATION OR STEEL CONSTRUCTION CONNECTIONS RESPECTIVELY.

NOTES

LEGEND

REFERENCE DRAWING	DRG. No.
**********	******

KEY PLAN

REV.	DATE	P.O.I.S	PREP.	CHK.	APP.	AUT.
D00	JUL.2021	IFI	M.Asgharnejad	M.Fakharian	Sh.Ghalikar	**.**

REV.	DESCRIPTION	BY	DATE	BY	DATE
***	**********	**.**	***.****	**.**	***.****
		CHECKED		REV. APPR.	

PROJECT NAME: BINAK OILFIELD DEVELOPMENT SURFACE WORK PACKAGES GENERAL

PROJECT NO.: 971020

EPC CONTRACTOR: HIRGAN ENERGY – DESIGN & INSPECTION COMPANIES

GENERAL CONTRACTOR: PETROIRAN DEVELOPMENT COMPANY (PEDCO)

BINAK OILFIELD DEVELOPMENT SURFACE WORK PACKAGES GENERAL

DATE	SCALE	DRAWING BY	CHECKED BY	PROJECT ENG.

(VENDOR TITLE BLOCK)**

DRAWING TITLE: STANDARD DETAIL DRAWING FOR PRESSURE VESSELS AND HEAT EXCHANGERS (SUPPORT LUG FOR VERTICAL VESSELS)

SCALE	SIZE	DRAWING NO.	SHEET NO.	REV.
As Shown	A3	BK-GNRAL-PEDCO-000-ME-DW-0001	13 OF 55	D00

NO CONSTRUCTION PERMITTED UNLESS DRAWING APPROVED

APPROVED FOR CONSTRUCTION BY: DATE:

BUDGET REF.	LOCATION	SIZE	CLASS	SERIAL NO.	SHEET	REVISION

TITLE: SUPPORT LUG FOR VERTICAL VESSELS (CONT'D)

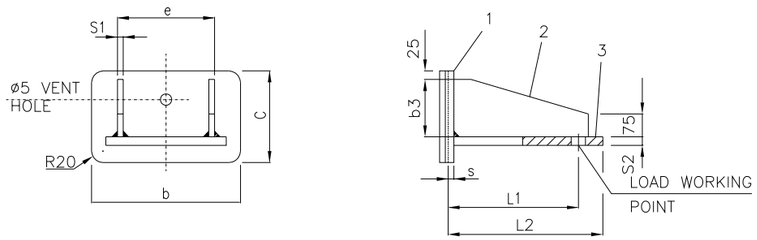

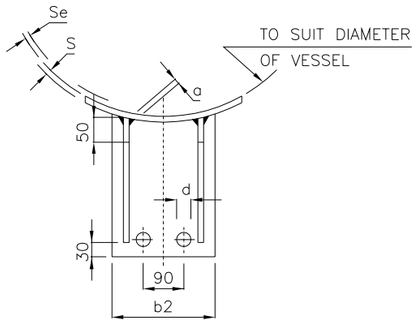

EXECUTION
FIXED POINT

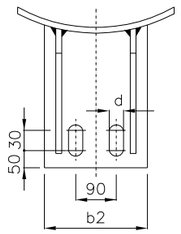

EXECUTION
LOOSE POINT

TABLE 2: SUPPORT BRACKETS DIMENSIONS(mm)

TYPE	LOAD PER CLAW DA N	PART 1 bxcxs	PART 2 b3xs1	PART 3 b2xs2	** a	L2	* L1	d	e
A	250	230x290xS	240x10	200x12		330	275	18	180
B	500	230x290xS	240x10	200x12		330	275	18	180
C	750	230x290xS	240x10	200x12		330	275	18	180
D	1000	250x315xS	265x12	220x12		400	330	18	200
E	1500	250x315xS	265x12	220x12	>0.7xSmin.	400	330	18	200
F	2000	300x375xS	325x15	250x15		400	330	18	230
G	2500	300x375xS	325x15	250x15		400	330	23	230
H	3000	350x440xS	390x15	250x15		400	330	23	230
J	4000	400x500xS	450x15	250x15		400	330	23	
K	5000	450x560xS	510x15	250x15		400	330	23	

*L1 = STATES MAX. DISTANCE OF ANCHOR BOLT HOLES. THIS, HOWEVER, MAY BE DECREASED IF "DRILLING ON SITE" INDICATED ON ENGINEERING DATA SHEET AND ERECTION REASONS REQUIRED SO.

** S min. = THE LOWER THICKNESS OF S OR S1.

NOTES

LEGEND

REFERENCE DRAWING	DRG. No.
**********	******

KEY PLAN

REV.	DESCRIPTION	BY	DATE	BY	DATE
***	**********	**.**	***.****	**.**	***.****
		CHECKED		REV. APPR.	

REV.	DATE	P.O.I.S	PREP.	CHK.	APP.	AUT.
D00	JUL.2021	IFI	M.Asgharnejad	M.Fakharian	Sh.Ghalikar	**.**

PROJECT NAME: BINAK OILFIELD DEVELOPMENT SURFACE WORK PACKAGES GENERAL

PROJECT NO.: 971020

EPC CONTRACTOR: HIRGAN ENERGY – DESIGN & INSPECTION COMPANIES

GENERAL CONTRACTOR: PETROIRAN DEVELOPMENT COMPANY (PEDCO)

BINAK OILFIELD DEVELOPMENT SURFACE WORK PACKAGES GENERAL

DATE	SCALE	DRAWING BY	CHECKED BY	PROJECT ENG.

(VENDOR TITLE BLOCK)**

DRAWING TITLE: STANDARD DETAIL DRAWING FOR PRESSURE VESSELS AND HEAT EXCHANGERS (SUPPORT LUG FOR VERTICAL VESSELS)

NO CONSTRUCTION PERMITTED UNLESS DRAWING APPROVED

APPROVED FOR CONSTRUCTION BY: DATE:

SCALE	SIZE	DRAWING NO.	SHEET NO.	REV.
As Shown	A3	BK-GNRAL-PEDCO-000-ME-DW-0001	14 OF 56	D00

BUDGET REF.	LOCATION	SIZE	CLASS	SERIAL NO.	SHEET	REVISION

TITLE: HINGE & DAVIT DETAILS FOR MANHOLES

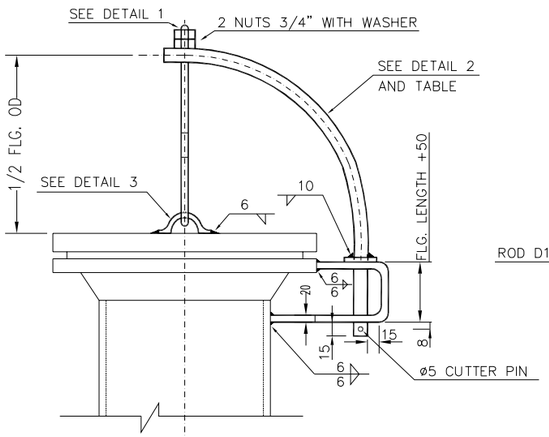

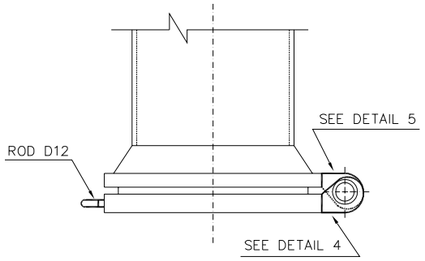

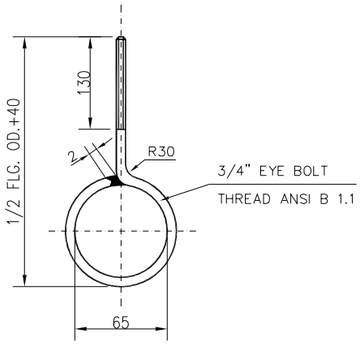

DETAIL 1
EYE BOLT

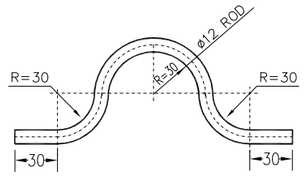

DETAIL 3
LUG(HANDLE)

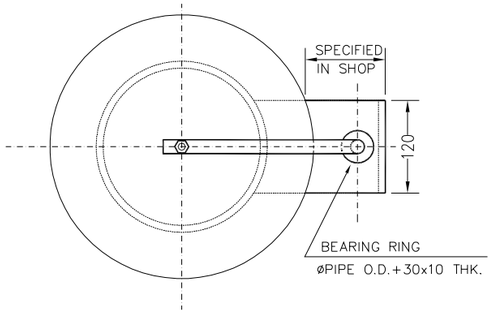

VERTICAL MANHOLE

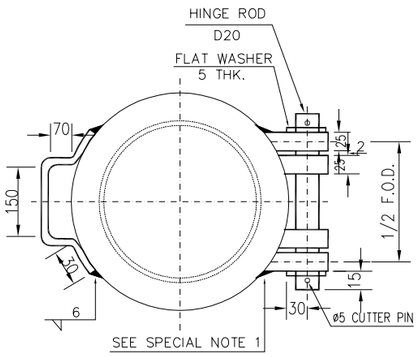

MANHOLE COVER HINGE
USE FOR BOTTOM ENTRY

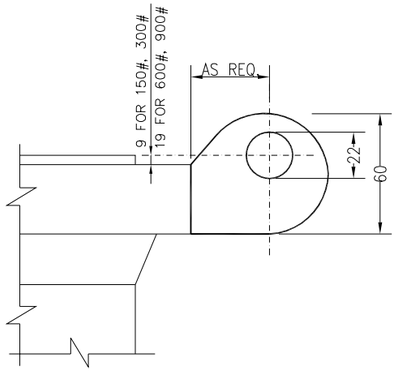

DETAIL 5
FLANGE HINGE

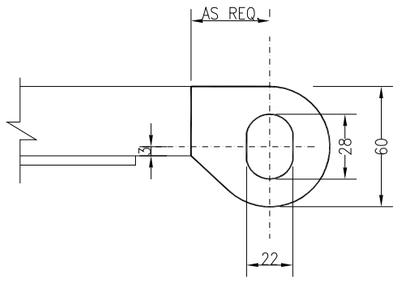

DETAIL 4
COVER HINGE

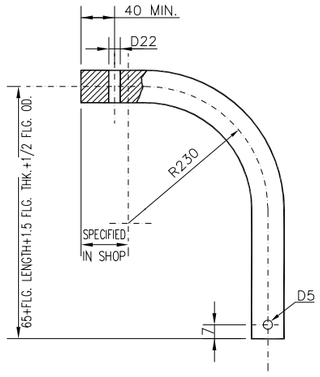

DETAIL 2

FLANGE RATING		150#					300#					600#					900#				
FLANGE SIZE		14"	16"	18"	20"	24"	14"	16"	18"	20"	24"	14"	16"	18"	20"	24"	14"	16"	18"	20"	24"
		350	400	450	500	600	350	400	450	500	600	350	400	450	500	600	350	400	450	500	600
DAVIT SIZE (PIPE)	IN	1 1/2	1 1/2	1 1/2	2	2	1 1/2	1 1/2	2	3	3	2 1/2	2 1/2	2 1/2	3	3	2 1/2	3	3	3	4
	PN	40	40	40	50	50	40	40	50	50	50	65	65	65	80	80	65	80	80	80	80
	SCH.	80	80	80	80	80	80	80	80	80	80	80	80	80	80	80	80	80	80	80	80
	THK.	5.08	5.08	5.08	5.54	5.54	5.08	5.08	5.54	7.62	7.62	7.01	7.01	7.01	7.62	7.62	7.01	7.62	7.62	7.62	8.55

NOTES

1- ALL DIMENSIONS ARE IN mm. , UNLESS OTHERWISE SHOWN.

2- DAVIT ASSEMBLY SHALL BE IN TRUE VERTICAL ALIGNMENT AFTER WELDING SUPPORT ON TO NOZZLE NECK, OR FLANGE, MANHOLE POSITION IS INDICATED ON VESSEL DRAWING.

3- MATERIAL :

PIN, ROD & EYEBOLT=A36 OR EQUIVALENT

PIPE=A53 Gr.B OR EQUIVALENT

PLATE=A283 Gr. C OR EQUIVALENT (FOR ALLOY AND S.S FLANGES USE TRANSITION PLATE.)

4- SEE VESSEL DRAWING FOR HINGE AND DAVIT ORIENTATION.

5- ALL WELDINGS SHALL BE MADE BEFORE VESSEL HEAT TREATMENT.(IF ANY)

6- WELDING SYMBOLS PROCEDURE AND TESTS ARE PER A.W.S.

SPECIAL NOTES:

1- WELDING SHALL BE OF FULL PENETRATION TYPE WITHOUT EXCESSIVE HEATING TO AVOID FLANGE DAMAGE OR DISTORTION.

2- FIT LUGS AND PIN SO THAT PIN IS LOOSE WHEN COVER IS BOLTED UP.

LEGEND

REFERENCE DRAWING	DRG. No.
**********	******

KEY PLAN

REV.	DATE	P.O.I.S	PREP.	CHK.	APP.	AUT.
D00	JUL.2021	IFI	M.Angharnejad	M.Fakharian	Sh.Ghaliker	**.**

REV.	DESCRIPTION	BY	DATE	BY	DATE
		CHECKED		REV. APPR.	
***	**********	**.**	***.****	**.**	***.****

PROJECT NAME: BINAK OILFIELD DEVELOPMENT SURFACE WORK PACKAGES GENERAL

PROJECT NO.: 971020

EPC CONTRACTOR: HIRGAN ENERGY – DESIGN & INSPECTION COMPANIES

GENERAL CONTRACTOR: PETROIRAN DEVELOPMENT COMPANY (PEDCO)

BINAK OILFIELD DEVELOPMENT SURFACE WORK PACKAGES GENERAL

DATE	SCALE	DRAWING BY	CHECKED BY	PROJECT ENG.

(VENDOR TITLE BLOCK)**

DRAWING TITLE: STANDARD DETAIL DRAWING FOR PRESSURE VESSELS AND HEAT EXCHANGERS (HINGE AND DAVIT DETAILS FOR MANHOLES)

NO CONSTRUCTION PERMITTED UNLESS DRAWING APPROVED

APPROVED FOR CONSTRUCTION BY: DATE:

SCALE	SIZE	DRAWING NO.	SHEET NO.	REV.
As Shown	A3	BK-GNRAL-PEDCO-000-ME-DW-0001	16 OF 66	D00

BUDGET REF.	LOCATION	SIZE	CLASS	SERIAL NO.	SHEET	REVISION

TITLE: VORTEX BREAKER

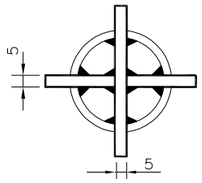

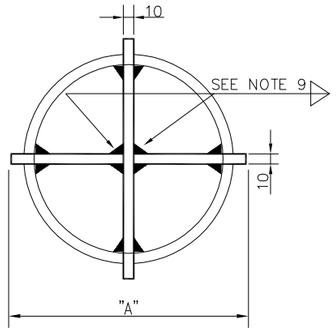

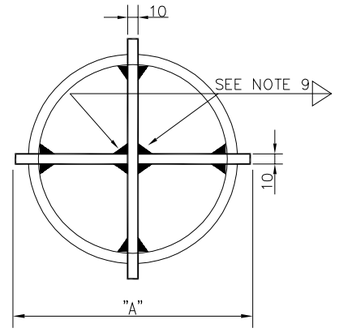

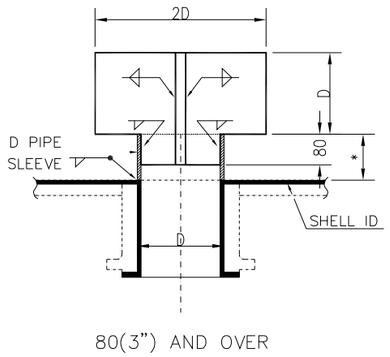

FOR LINED VESSELS

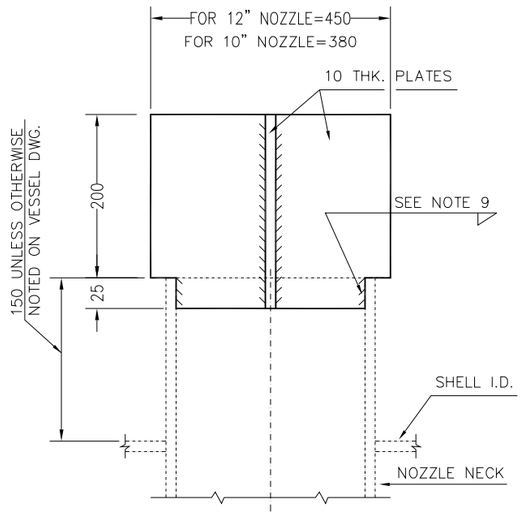

TYPE-A

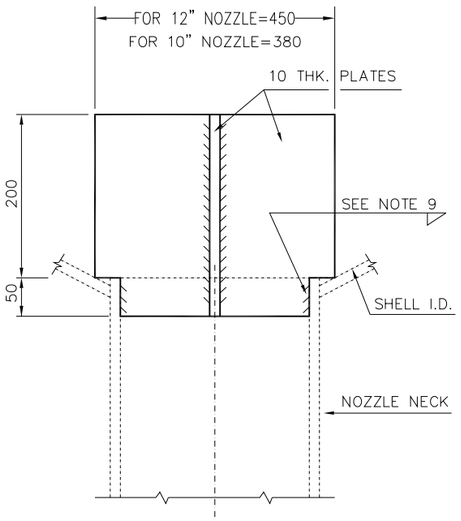

TYPE-B

80(3")AND OVER

FOR UNLINED VESSELS

NOTES

1- ALL DIMENSIONS ARE IN MILLIMETERS.

2- SEE VESSEL OUTLINE DRAWING FOR MATERIAL & PIPE SIZE.

3- VESSEL FABRICATOR TO FURNISH & INSTALL VORTEX BREAKERS.

4- IN CASE OF CONFLICT BETWEEN THIS STANDARD AND VESSEL DRAWING THE LATTER SHALL GOVERN.

5- FOR STAINLESS STEEL VESSELS, (VORTEX BREAKER) PLATE SHALL BE 6mm THK. SAME MATERIAL AS VESSEL.

6- ALLOY OR CONCRETE LINED BAFFLE AND SLEEVE MATERIAL SHALL BE 5 PLATE STEEL MATERIAL AS NOZZLE LINING.

7- DETAILS, DIMENSIONS AND NOTES IN PROJECT SPECIFICATION-VESSELS TAKE PRECEDENCE OVER THOSE SHOWN HEREON.

8- FOR I.D. OF THE PENETRATING PIPE INTO THE NOZZLE SEE VESSEL DRAWING.

* SEE PROJECT SPECIFICATION-VESSELS.

9- ALL WELDINGS SHALL BE OF CONTINUOUS FILLET TYPE WITH SIZE AT LEAST THINNER OF THE WELDED PARTS.

LEGEND

REFERENCE DRAWING	DRG. No.
**********	******

KEY PLAN

REV.	DESCRIPTION	BY	DATE	BY	DATE
***	**********	**.**	***.****	**.**	***.****
		CHECKED		REV. APPR.	

REV.	DATE	P.O.I.S	PREP.	CHK.	APP.	AUT.
D00	JUL.2021	IFI	M.Angharnejad	M.Fakharian	Sh.Ghalikar	**.**

PROJECT NAME: BINAK OILFIELD DEVELOPMENT SURFACE WORK PACKAGES GENERAL

PROJECT NO.: 971020

EPC CONTRACTOR: HIRGAN ENERGY – DESIGN & INSPECTION COMPANIES

EBNEERD CONTRACTOR: PETROIRAN DEVELOPMENT COMPANY (PEDCO)

BINAK OILFIELD DEVELOPMENT
SURFACE WORK PACKAGES
GENERAL

DATE	SCALE	DRAWING BY	CHECKED BY	PROJECT ENG.

NO CONSTRUCTION PERMITTED UNLESS DRAWING APPROVED

APPROVED FOR CONSTRUCTION | BY: | DATE:

(VENDOR TITLE BLOCK)**

DRAWING TITLE: STANDARD DETAIL DRAWING FOR PRESSURE VESSELS AND HEAT EXCHANGERS (VORTEX BREAKER)

SCALE	SIZE	DRAWING NO.	SHEET NO.	REV.
As Shown	A3	BK-GNRAL-PEDCO-000-ME-DW-0001	16 OF 55	D00

BUDGET REF.	LOCATION	SIZE	CLASS	SERIAL NO.	SHEET	REVISION

TITLE: LIFTING LUG TO LIFT VESSELS UP TO 60 TONS

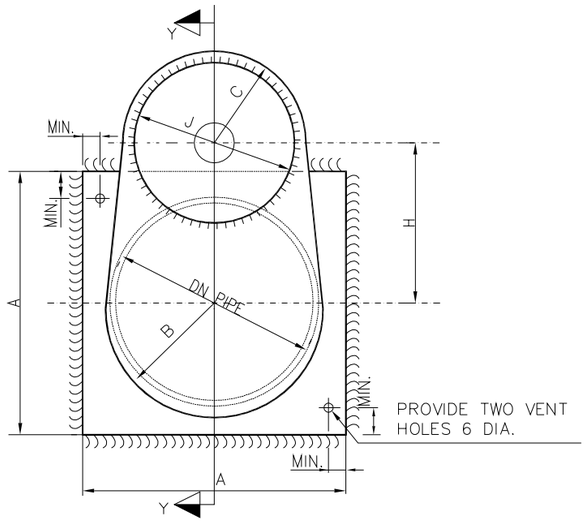

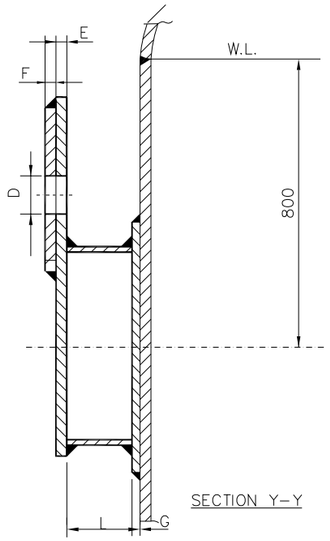

(SEE NOTE 8) LIFTING LUG LIFTING CAPACITY	PIPE			PLATES								
	DN	THK.MIN.	L	A	B	C	D	E	F	G	H	J
≦ 5	150	7.11	60	*	100	55	27	8	–	*	130	–
5< ≦ 10	200	8.18	85	*	125	85	38	10	–	*	170	–
10< ≦ 20	200	8.18	85	*	125	100	44	10	9	*	180	180
20< ≦ 25	250	9.27	100	*	150	120	54	12	9	*	210	220
25< ≦ 30	300	8.38	110	*	175	160	60	12	9	*	250	300

NOTES

1- ALL DIMENSIONS ARE IN MILLIMETERS UNLESS OTHERWISE INDICATED.
2- IN CASE OF CONFLICT BETWEEN THIS STANDARD AND THE VESSEL DRAWING THE LATTER SHALL GOVERN.
3- FOR POSITIONING OF LIFTING LUG SEE EQUIPMENT DRAWING.
4- WELDING SIZE TO BE 0.7 OF THE THICKNESS.
5- LIFTING LUG MATERIALS-PLATES AS PER VESSEL MATERIAL OR EQUIVALENT, WHEN CARBON STEEL VESSEL, THE MINIMUM REQUIRED IS SA 516, GR. 70
6- PIPE MATERIALS, SA 106, GR. B OR EQUIVALENT.
7- THE PLATE WELDED TO SHELL FOR ALLOY STEEL EQUIPMENT SHALL BE SAME MATERIAL OF SIDE TO WHICH IT IS WELDED.
8- TWO LIFTING LUGS ARE REQUIRED.
9- A AND G ARE WIDTH AND THICKNESS OF THE REINFORCING PLATE, WHICH ARE NOT MENTIONED IN THIS TABLE.

LEGEND

REFERENCE DRAWING	DRG. No.
**********	******

KEY PLAN

REV.	DATE	P.O.I.S	PREP.	CHK.	APP.	AUT.
D00	JUL.2021	IFI	M.Jaghernejad	M.Fakharian	Sh.Ghalikar	**.**

REV.	DESCRIPTION	CHECKED BY	CHECKED DATE	REV. APPR. BY	REV. APPR. DATE
***	**********	**.**	***.****	**.**	***.****

PROJECT NAME: BINAK OILFIELD DEVELOPMENT SURFACE WORK PACKAGES GENERAL

PROJECT NO.: 971020

EPC CONTRACTOR: HIRGAN ENERGY – DESIGN & INSPECTION COMPANIES

OWNER CONTRACTOR: PETROIRAN DEVELOPMENT COMPANY (PEDCO)

BINAK OILFIELD DEVELOPMENT
SURFACE WORK PACKAGES
GENERAL

DATE	SCALE	DRAWING BY	CHECKED BY	PROJECT ENG.

(VENDOR TITLE BLOCK)**

DRAWING TITLE: STANDARD DETAIL DRAWING FOR PRESSURE VESSELS AND HEAT EXCHANGERS (LIFTING LUG TO LIFT VESSELS UP TO 60 TONS)

NO CONSTRUCTION PERMITTED UNLESS DRAWING APPROVED

APPROVED FOR CONSTRUCTION BY: DATE:

SCALE	SIZE	DRAWING NO.	SHEET NO.	REV.
As Shown	A3	BK-GNRAL-PEDCO-000-ME-DW-0001	17 OF 56	D00

BUDGET REF.	LOCATION	SIZE	CLASS	SERIAL NO.	SHEET	REVISION

TITLE: LIFTING LUG TO LIFT VESSELS UP TO 200 TONS

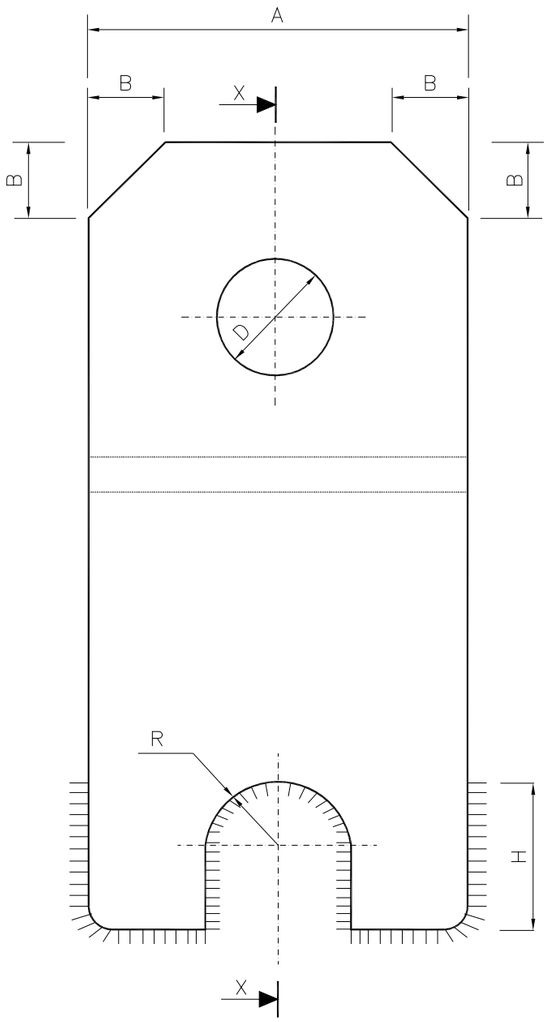

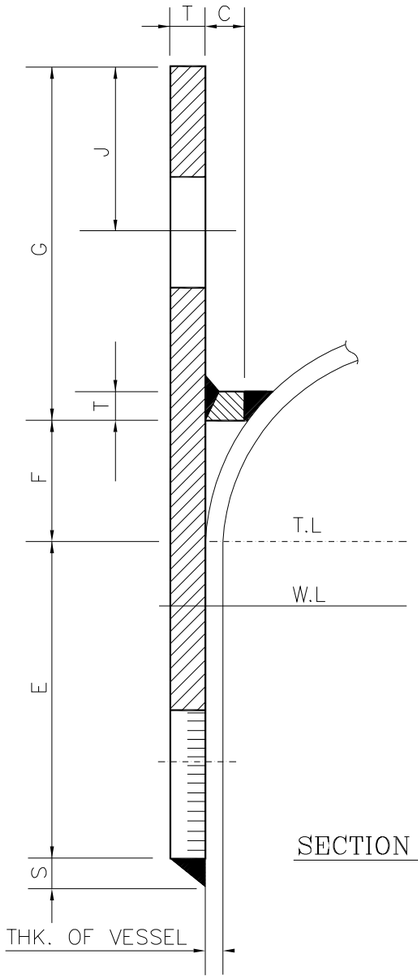

SECTION X-X

MAX. WEIGHT OF VESSEL (TON)	A	B	C	D	E	F	G	H	J	K	R	S	T
10	180	25	25	65	160	SEE NOTE 2	160	80	90	40	40	10	12
25	230	40	40	75	230		230	130	90	40	40	16	25
50	300	50	50	75	280		300	150	115	50	50	22	40
100	400	70	70	100	360		400	200	150	75	75	32	50
150	500	90	80	130	410		500	250	180	90	90	40	70
200	600	100	100	150	490		600	300	230	100	100	45	80

NOTES

1- ALL DIMENSIONS ARE IN mm. UNLESS OTHERWISE SPECIFIED

2- DIMENSION "F" TO BE DETERMINED BY THE SHAPE OF HEAD IN CONJUNCTION WITH DIMENSION "C".

3- FILLET WELD SIZE "S" SHALL NOT EXCEED SHELL THICKNESS.

4-MATERIAL SHALL BE SA516 GR 70 OR EQUIVALENT FOR CARBON STEEL VESSELS.

5-LIFTING LUG MATERIAL FOR ALLOY STEEL VESSELS SHALL BE THE SAME AS VESSEL'S MATERIAL.

6- TWO LIFTING LUGS SHALL BE REQUIRED FOR EACH VESSEL

7-IN CASE OF CONFLICT BETWEEN VESSEL DRAWING AND THIS DRAWING, THE VESSEL DRAWING SHALL GOVERN.

LEGEND

REFERENCE DRAWING	DRG. No.
**********	******

KEY PLAN

REV.	DATE		PREP.	CHK.	APP.	AUT.
D00	JUL.2021	IFI	M.Asgharnejad	M.Fakharian	Sh.Ghalikar	**.**

REV.	DESCRIPTION	CHECKED BY	CHECKED DATE	REV. APPR. BY	REV. APPR. DATE
***	**********	**.**	***.****	**.**	***.****

PROJECT NAME: BINAK OILFIELD DEVELOPMENT SURFACE WORK PACKAGES GENERAL

PROJECT NO.: 971020

EPC CONTRACTOR: HIRGAN ENERGY – DESIGN & INSPECTION COMPANIES

SERVERD CONTRACTOR: PEDCO — PETROIRAN DEVELOPMENT COMPANY

BINAK OILFIELD DEVELOPMENT
SURFACE WORK PACKAGES
GENERAL

DATE	SCALE	DRAWING BY	CHECKED BY	PROJECT ENG.

(VENDOR TITLE BLOCK)**

DRAWING TITLE: STANDARD DETAIL DRAWING FOR PRESSURE VESSELS AND HEAT EXCHANGERS (LIFTING LUG TO LIFT VESSELS UP TO 200 TONS)

NO CONSTRUCTION PERMITTED UNLESS DRAWING APPROVED

APPROVED FOR CONSTRUCTION BY: DATE:

SCALE	SIZE	DRAWING NO.	SHEET NO.	REV.
As Shown	A3	BK-GNRAL-PEDCO-000-ME-DW-0001	18 OF 56	D00

BUDGET REF.	LOCATION	SIZE	CLASS	SERIAL NO.	SHEET	REVISION

TITLE: INTERNAL LADDER RUNG

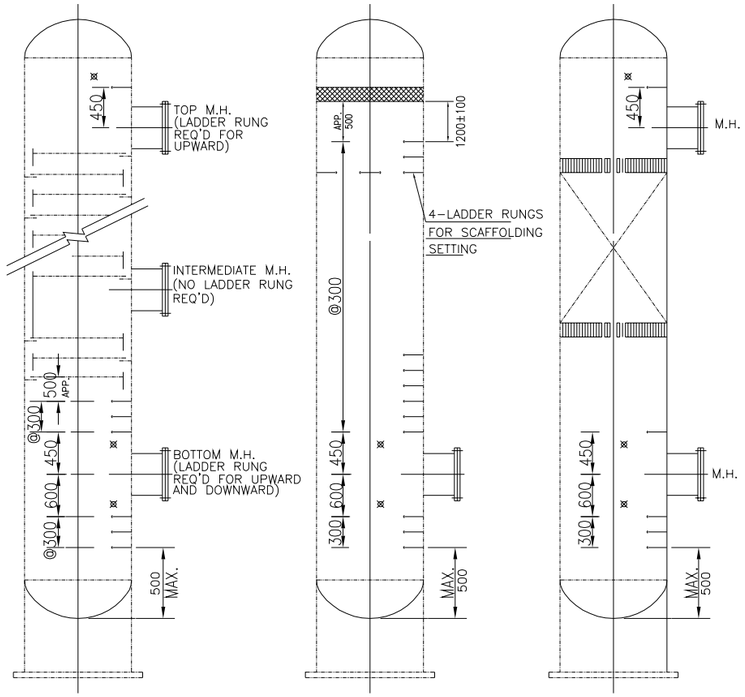

TRAY TOWER

VERTICAL VESSEL
WITH DEMISTER PAD

PACKED VESSEL

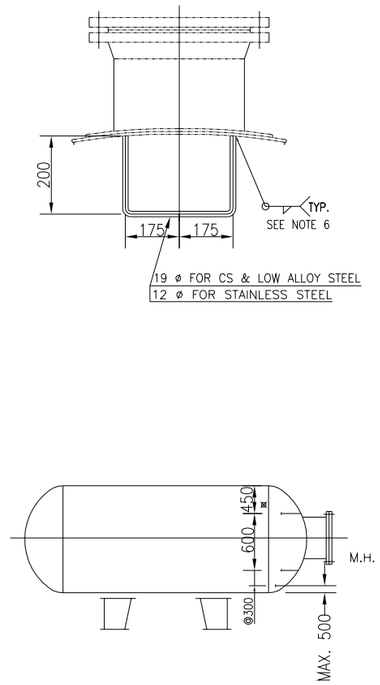

HORIZONTAL VESSEL

HANDLE

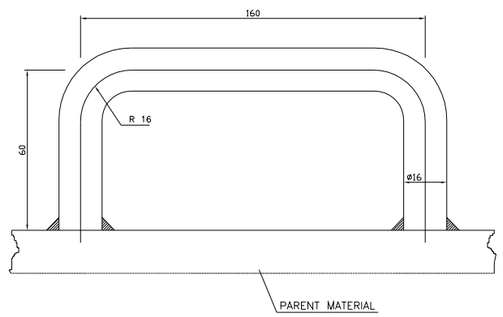

TABLE 1 (MM)

MATERIAL / CORR. ALLOWANCE	CARBON STEEL & LOW ALLOY STEEL	STAINLESS STEEL
0	6	6
1.6	6	6
3.2	8	8
4.8	10	–
6.4	12	–

MATERIAL: AS PER DRAWING

(GENERAL COMPOSITION AS PARENT MATERIAL)

NOTES

1- ALL DIMENSIONS ARE IN MM.

2- FOR MATERIAL, SEE ENGINEERING DWG.

3- LADDER RUNGS AS MARKED WITH ø SHALL BE PROVIDED FOR ALL MANHOLES. OTHER LADDER RUNGS SHALL BE PROVIDED IN THE FOLLOWING CONDITIONS;

- ELEVATIONAL DISTANCE BETWEEN MANHOLE CENTER LINE AND BOTTOM OF VESSEL OR INTERNALS EXCEED 900 MM.
- THERE IS NO INTERNAL UPWARD OF MANHOLE.

4- ORIENTATION OF LADDER RUNG SHALL BE SAME AS MANHOLE.

5- M.H MEANS MANHOLE.

6- FILLET WELD SIZE SHALL BE AS TABLE 1 ;

LEGEND

REFERENCE DRAWING	DRG. No.
**********	******

KEY PLAN

REV.	DATE	P.O.I.S	PREP.	CHK.	APP.	AUT.
D00	JUL.2021	IFI	M.Asgharnejad	M.Fakharian	Sh.Ghalikar	**.**

REV.	DESCRIPTION	BY	DATE	BY	DATE
***	**********	**.**	***.****	**.**	***.****
		CHECKED		REV. APPR.	

PROJECT NAME: BINAK OILFIELD DEVELOPMENT SURFACE WORK PACKAGES GENERAL

PROJECT NO.: 971020

EPC CONTRACTOR: HIRGAN ENERGY – DESIGN & INSPECTION COMPANIES

SPONSERRD CONTRACTOR: PEDCO — PETROIRAN DEVELOPMENT COMPANY

BINAK OILFIELD DEVELOPMENT
SURFACE WORK PACKAGES
GENERAL

DATE	SCALE	DRAWING BY	CHECKED BY	PROJECT ENG.

(VENDOR TITLE BLOCK)**

DRAWING TITLE: STANDARD DETAIL DRAWING FOR PRESSURE VESSELS AND HEAT EXCHANGERS (INTERNAL LADDER RUGS)

NO CONSTRUCTION PERMITTED UNLESS DRAWING APPROVED

APPROVED FOR CONSTRUCTION BY: DATE:

SCALE	SIZE	DRAWING NO.	SHEET NO.	REV.	BUDGET REF.	LOCATION	SIZE	CLASS	SERIAL NO.	SHEET	REVISION
As Shown	A3	BK-GNRAL-PEDCO-000-ME-DW-0001	19 OF 56	D00							

TITLE: EARTHING BOSS

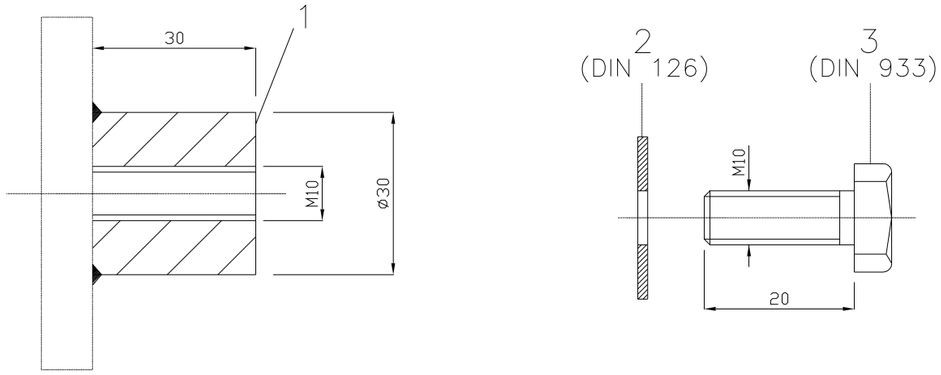

TYPE A: FOR CONNECTION SURFACES NOT INSULATED OR NOT FIREPROOF RESPECTIVELY.

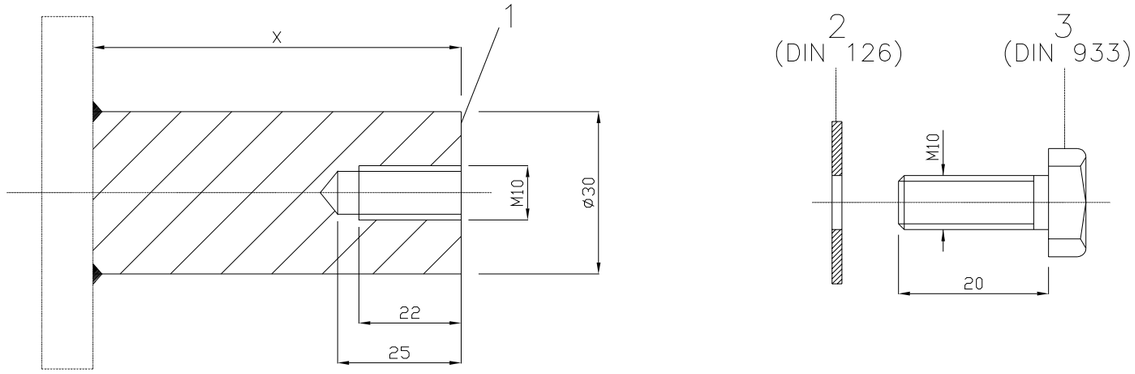

TYPE B: FOR CONNECTION SURFACES INSULATED OR FIREPROOF RESPECTIVELY.
X=INSULATION (OR FIRE PROOFING) THICKNESS +20mm.

NOTES

LEGEND

REFERENCE DRAWING	DRG. No.
**********	******

KEY PLAN

REV.	DATE	P.O.I.S	PREP.	CHK.	APP.	AUT.
D00	JUL.2021	IFI	M.Asgharnejad	M.Fakharian	Sh.Ghalikar	**.**

REV.	DESCRIPTION	BY	DATE	BY	DATE
		CHECKED		REV. APPR.	
***	**********	**.**	***.****	**.**	***.****

PROJECT NAME: BINAK OILFIELD DEVELOPMENT SURFACE WORK PACKAGES GENERAL

PROJECT NO.: 971020

EPC CONTRACTOR:
HIRGAN ENERGY – DESIGN & INSPECTION COMPANIES

~~EPC/EPD CONTRACTOR:~~
PEDCO
PETROIRAN DEVELOPMENT COMPANY

BINAK OILFIELD DEVELOPMENT
SURFACE WORK PACKAGES
GENERAL

DATE	SCALE	DRAWING BY	CHECKED BY	PROJECT ENG.

NO CONSTRUCTION PERMITTED UNLESS DRAWING APPROVED

APPROVED FOR CONSTRUCTION BY: DATE:

(VENDOR TITLE BLOCK)**

DRAWING TITLE:
STANDARD DETAIL DRAWING FOR PRESSURE VESSELS AND HEAT EXCHANGERS
(EARTHING BOSS)

SCALE	SIZE	DRAWING NO.	SHEET NO.	REV.
As Shown	A3	BK-GNRAL-PEDCO-000-ME-DW-0001	20 OF 65	D00

BUDGET REF.	LOCATION	SIZE	CLASS	SERIAL NO.	SHEET	REVISION

TITLE: COLUMN DAVIT DETAILS

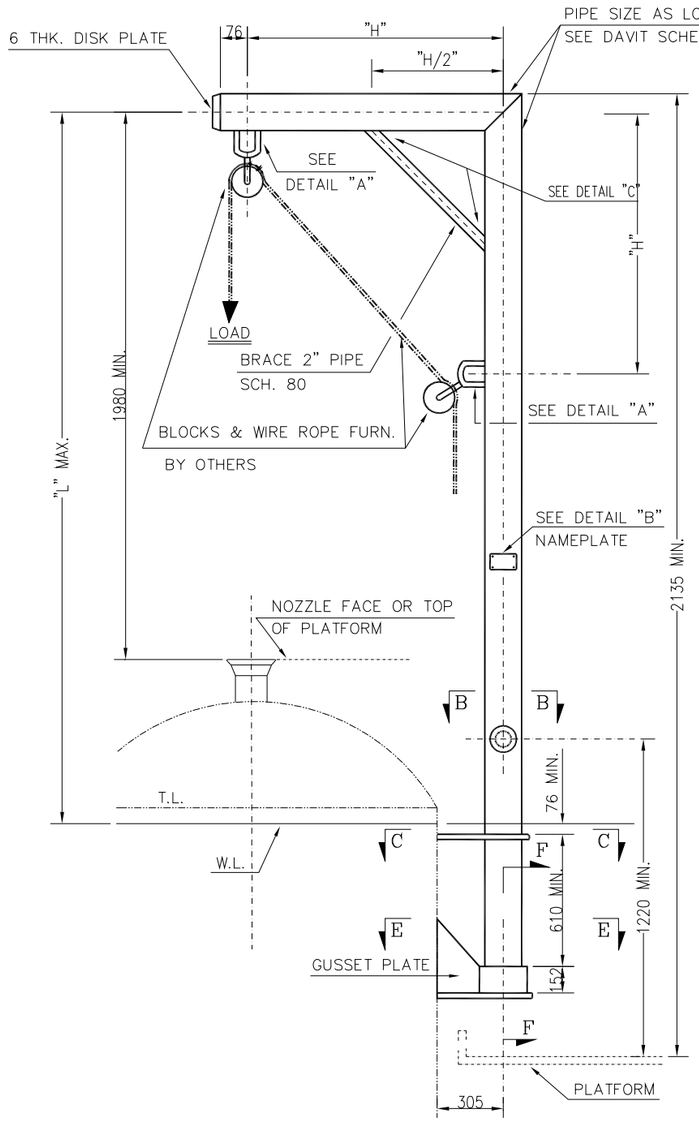

TYPICAL ELEVATION

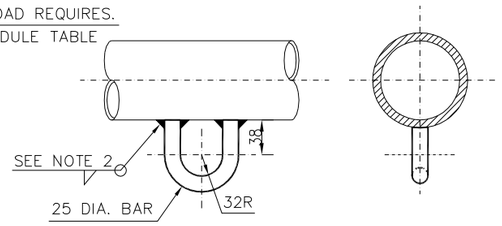

DETAIL "A"

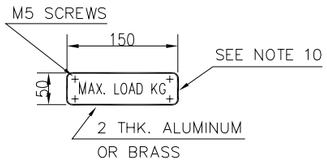

DETAIL "B"

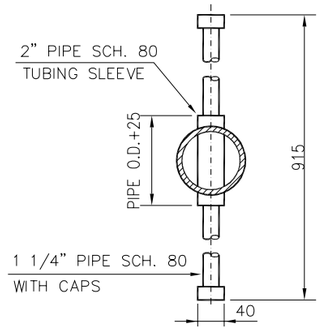

SECTION B–B

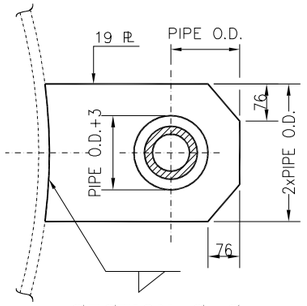

SECTION C–C

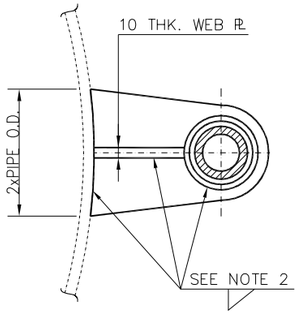

SECTION E–E

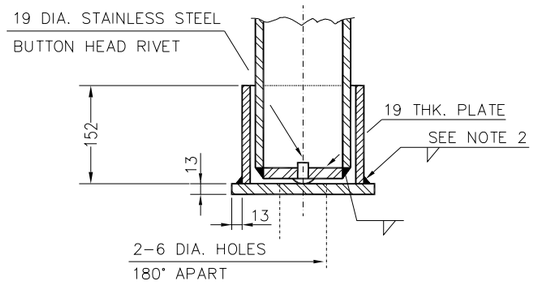

SECTION F–F

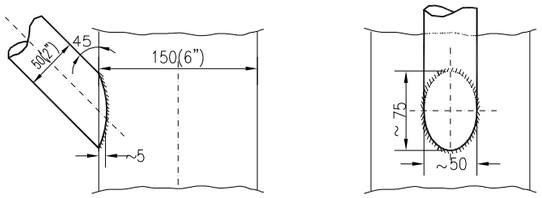

DETAIL "C"
FOR 6" PIPE SIZE

DAVIT SCHEDULE				
MK	LOAD	H	L	PIPE SIZE
1	450 Kg	914	3429	6" STD. W.T.
2	450 Kg	1219	3835	6" SCH. 80
3	450 Kg	1524	4445	8" STD. W.T.
4	680 Kg	1372	3581	8" STD. W.T.
5	680 Kg	1829	4521	8" STD. W.T.
6	900 Kg	1829	6274	8" XS W.T.

NOTES

LEGEND

REFERENCE DRAWING	DRG. No.
**********	******

KEY PLAN

REV.	DESCRIPTION	BY	DATE	BY	DATE
***	**********	**.**	***.****	**.**	***.****
		CHECKED		REV. APPR.	

REV.	DATE	P.O.I.S	PREP.	CHK.	APP.	AUT.
D00	JUL.2021	IFI	M.Aagharnejad	M.Fakharian	Sh.Ghalikar	**.**

PROJECT NAME: BINAK OILFIELD DEVELOPMENT SURFACE WORK PACKAGES GENERAL

PROJECT NO.: 971020

EPC CONTRACTOR: HIRGAN ENERGY – DESIGN & INSPECTION COMPANIES

EPC/EPCM CONTRACTOR: PETROIRAN DEVELOPMENT COMPANY (PEDCO)

BINAK OILFIELD DEVELOPMENT
SURFACE WORK PACKAGES
GENERAL

DATE	SCALE	DRAWING BY	CHECKED BY	PROJECT ENG.

NO CONSTRUCTION PERMITTED UNLESS DRAWING APPROVED

APPROVED FOR CONSTRUCTION BY: DATE:

(VENDOR TITLE BLOCK)**

DRAWING TITLE: STANDARD DETAIL DRAWING FOR PRESSURE VESSELS AND HEAT EXCHANGERS (COLUMN DAVIT DETAILS)

SCALE	SIZE	DRAWING NO.	SHEET NO.	REV.	BUDGET REF.	LOCATION	SIZE	CLASS	SERIAL NO.	SHEET	REVISION
As Shown	A3	BK-GNRAL-PEDCO-000-ME-DW-0001	21 OF 55	D00							

TITLE: GENERAL NOTE FOR NOZZLE

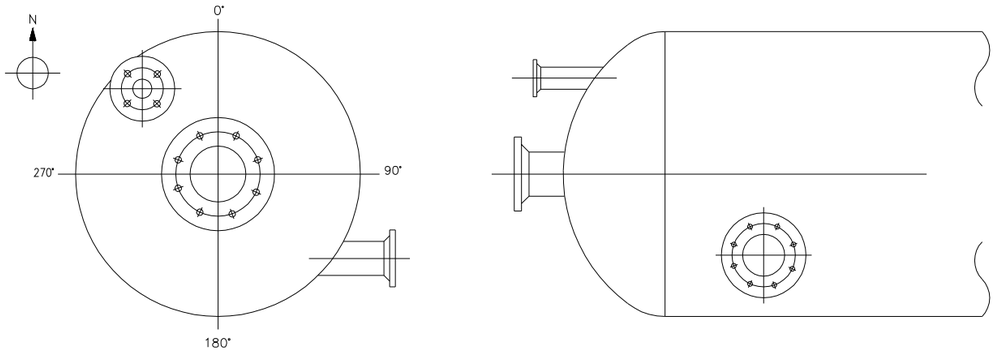

DESIGNATION OF NOZZLE PROJECTION LENGTH

FLANGE FACE

FLAT FACE (F.F.)

RAISED FACE (R.F.)

RING TYPE JOINT (R.T.J.)

MALE & FEMALE FACE (M & F)

TONGUE & GROOVE (T & G)

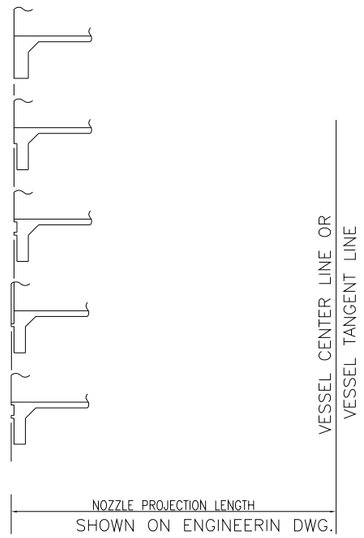

NOTES

1-FLANGE BOLT HOLES SHALL STRADDLE NORTH-SOUTH PLANT OR HORIZONTAL AND VERTICAL AXIS OF VESSEL.

LEGEND

REFERENCE DRAWING	DRG. No.
**********	******

KEY PLAN

REV.	DESCRIPTION	CHECKED BY	CHECKED DATE	REV. APPR. BY	REV. APPR. DATE
***	**********	**.**	***.****	**.**	***.****

REV.	DATE	P.O.I.S	PREP.	CHK.	APP.	AUT.
D00	JUL.2021	IFI	M.Jaghargnejad	M.Fakharian	Sh.Ghalikar	**.**

PROJECT NAME: BINAK OILFIELD DEVELOPMENT SURFACE WORK PACKAGES GENERAL

PROJECT NO.: 971020

EPC CONTRACTOR: HIRGAN ENERGY – DESIGN & INSPECTION COMPANIES

GENERAL CONTRACTOR: PEDCO — PETROIRAN DEVELOPMENT COMPANY

BINAK OILFIELD DEVELOPMENT
SURFACE WORK PACKAGES
GENERAL

DATE	SCALE	DRAWING BY	CHECKED BY	PROJECT ENG.

(VENDOR TITLE BLOCK)**

DRAWING TITLE:
STANDARD DETAIL DRAWING FOR PRESSURE VESSELS AND HEAT EXCHANGERS
(GENERAL NOTE FOR NOZZLE)

NO CONSTRUCTION PERMITTED UNLESS DRAWING APPROVED

APPROVED FOR CONSTRUCTION BY: DATE:

SCALE	SIZE	DRAWING NO.	SHEET NO.	REV.
As Shown	A3	BK-GNRAL-PEDCO-000-ME-DW-0001	22 OF 65	D00

BUDGET REF.	LOCATION	SIZE	CLASS	SERIAL NO.	SHEET	REVISION

TITLE: TEMPLATE FOR VERTICAL VESSELS

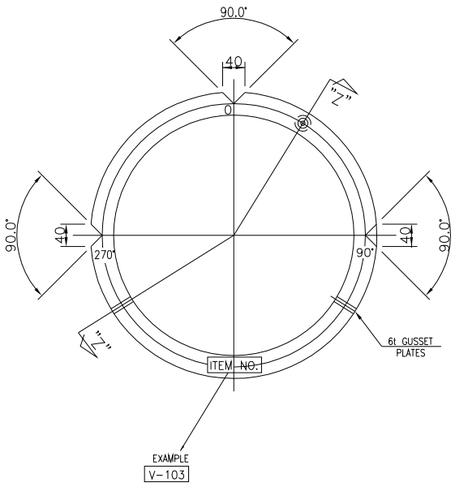

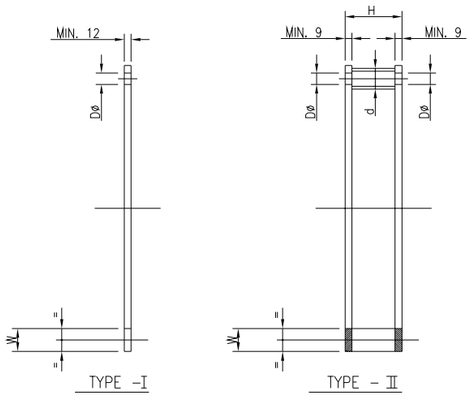

VIEW "Z"-"Z"

	BOLT SIZE										
	M24	M30	M36	M42	M48	M56	M64	M72	M80	M90	M100
H	262	264	314	316	316	369	369	422	475	475	475
W	100	100	110	120	130	150	160	170	180	200	220
D ø	26	33	39	45	52	62	70	78	86	96	107
d (NPS)	1 1/2	1 1/2	2	2	2 1/2	3	3	4	4	6	6

NOTES

1- ALL DIMENSIONS ARE IN MM.
2-MATERIALS SHALL BE AS FOLLOWS :
PLATE ... SA283GR.C OR EQUIVALENT
3- BOLT HOLES IN TEMPLATE AND BASE RING OF VESSEL SHALL BE DRILLED USING THE SAME GAUGE PLATE.
4- REINFORCEMENT OF TEMPLATE SHALL BE DESIGNED TO PREVENT DEFORMATION, DURING TRANSPORTATION.
5- ORIENTATION MARK 0°, 90°, 270° AND ITEM NUMBER SHALL BE MARKED BY WHITE PAINT ON THE UPPER FACE OF TEMPLATE.
6- IN CASE BOLT PITCH IS 800 MM AND OVER, GUSSET PLATES SHALL BE REQUIRED.

LEGEND

REFERENCE DRAWING	DRG. No.
**********	******

KEY PLAN

REV.	DATE	P.O.I.S	PREP.	CHK.	APP.	AUT.
D00	JUL.2021	IFI	M.Jaghernejad	M.Fakharian	Sh.Ghalikar	**.**

REV.	DESCRIPTION	CHECKED BY	CHECKED DATE	REV. APPR. BY	REV. APPR. DATE
***	**********	**.**	***.****	**.**	***.****

PROJECT NAME: BINAK OILFIELD DEVELOPMENT SURFACE WORK PACKAGES GENERAL

PROJECT NO.: 971020

EPC CONTRACTOR: HIRGAN ENERGY – DESIGN & INSPECTION COMPANIES

SPONSERD CONTRACTOR: PEDCO — PETROIRAN DEVELOPMENT COMPANY

BINAK OILFIELD DEVELOPMENT
SURFACE WORK PACKAGES
GENERAL

DATE	SCALE	DRAWING BY	CHECKED BY	PROJECT ENG.

(VENDOR TITLE BLOCK)**

DRAWING TITLE:
STANDARD DETAIL DRAWING FOR PRESSURE VESSELS AND HEAT EXCHANGERS
(TEMPLATE FOR VERTICAL VESSELS)

NO CONSTRUCTION PERMITTED UNLESS DRAWING APPROVED

APPROVED FOR CONSTRUCTION BY: DATE:

SCALE	SIZE	DRAWING NO.	SHEET NO.	REV.
As Shown	A3	BK-GNRAL-PEDCO-000-ME-DW-0001	23 OF 65	D00

BUDGET REF.	LOCATION	SIZE	CLASS	SERIAL NO.	SHEET	REVISION

TITLE: SUPPORT FOR HOT INSULATION & FIREPROOFING

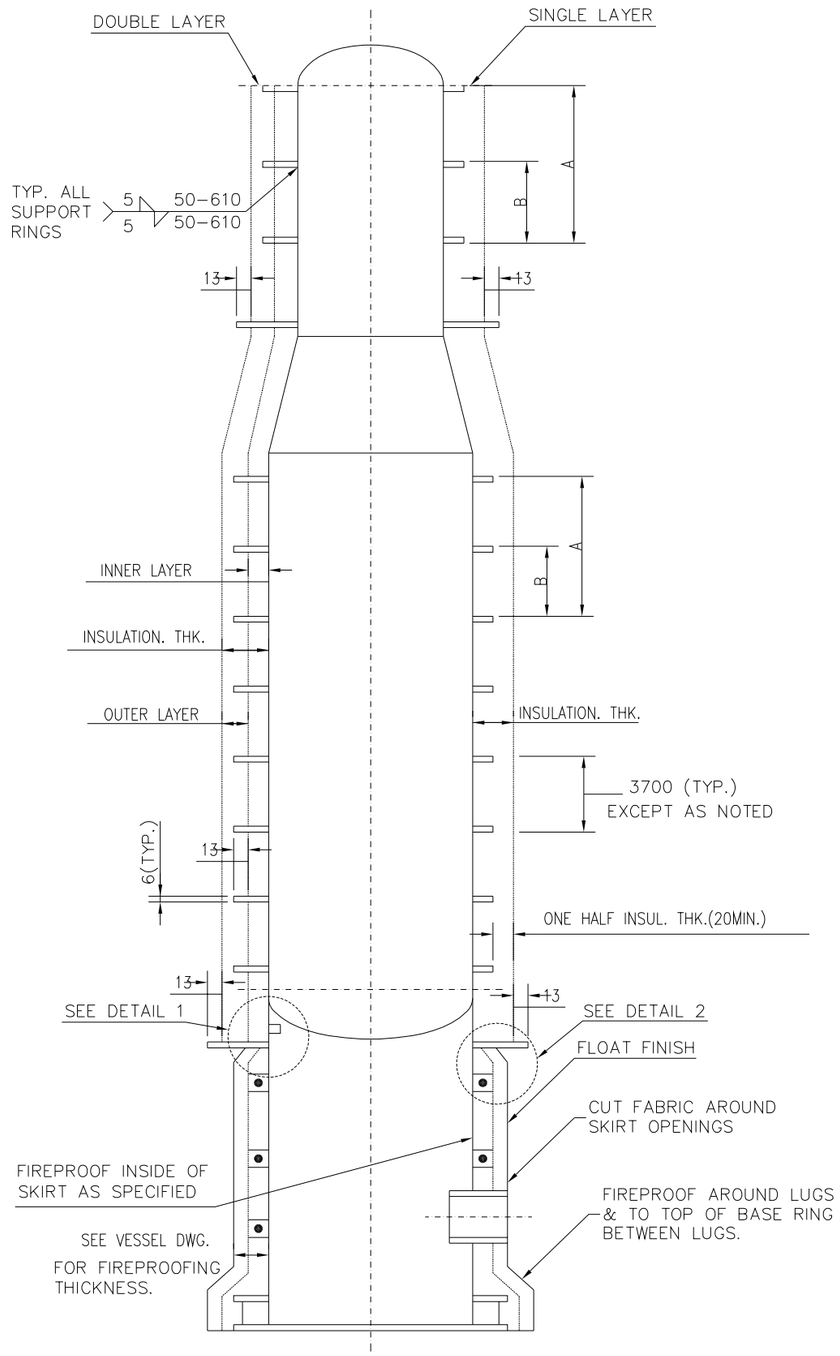

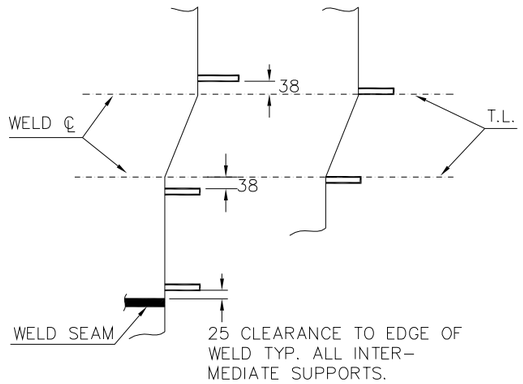

WHEN "A" IS	"B" SHALL BE
GREATER THAN 3700 BUT LESS THAN 5500	A/2 INCREASED TO NEAREST MULTIPLE OF 915 THEN ADD 20
GREATER THAN 5500	3700

INSUL THK.	INNER LAYER	OUTER LAYER
80	40	40
90	50	40
100	50	50
115	65	50
130	65	65
140	75	65
150	75	75
165	90	75
180	90	90

INNER & OUTER LAYER THK. FOR DOUBLE LAYER INSULATION

NOTES

1) ALL DIMENSIONS ARE IN MILLIMETER.
2) VESSEL FABRICATOR SHALL FURNISH AND INSTALL INSTALL SUPPORTS AS REQUIRED.
3) INSULATION, FIREPROOFING AND WIRE FABRIC SHALL BE FURNISHED AND INSTALLED BY OTHERS.
4) VESSEL FABRICATOR SHALL THOROUGHLY CLEAN ALL SURFACES TO REMOVE OIL, GREASE, LOOSE SCALE, DIRT, ETC., BEFORE ATTACHING SUPPORT PARTS.
5) THE WELDED WIRE FABRIC SHALL BE LAPPED APPROX, 75mm AT ALL SEAMS AND LACED TOGETHER.
6) VESSELS WITHOUT SKIRT SHALL HAVE 12mmø SQUARE NUTS WELDED ON BOTTOM HEAD ON APPROX. 400 SQUARE CENTERS (BY VESSEL FABRICATOR) INSTEAD OF DETAIL #1.
7) DOUBLE LAYER INSULATION SHALL BE USED ONLY WHEN SPECIFIED.

LEGEND

REFERENCE DRAWING	DRG. No.
**********	******

KEY PLAN

REV.	DESCRIPTION	BY	DATE	BY	DATE
***	**********	**.**	***.****	**.**	***.****

D00	JUL.2021	IFI	M.Asgharnejad	M.Fakharian	Sh.Ghalikar	**.**
REV.	DATE	P.O.I.S	PREP.	CHK.	APP.	AUT.

CHECKED REV. APPR.

PROJECT NAME: BINAK OILFIELD DEVELOPMENT SURFACE WORK PACKAGES GENERAL

PROJECT NO.: 971020

EPC CONTRACTOR: HIRGAN ENERGY – DESIGN & INSPECTION COMPANIES

SUPERVISING CONTRACTOR: PETROIRAN DEVELOPMENT COMPANY (PEDCO)

BINAK OILFIELD DEVELOPMENT SURFACE WORK PACKAGES GENERAL

DATE	SCALE	DRAWING BY	CHECKED BY	PROJECT ENG.

(VENDOR TITLE BLOCK)**

DRAWING TITLE: STANDARD DETAIL DRAWING FOR PRESSURE VESSELS AND HEAT EXCHANGERS (SUPPORT FOR INSULATION AND FIREPROOFING)

NO CONSTRUCTION PERMITTED UNLESS DRAWING APPROVED

APPROVED FOR CONSTRUCTION BY: DATE:

SCALE	SIZE	DRAWING NO.	SHEET NO.	REV.
As Shown	A3	BK-GNRAL-PEDCO-000-ME-DW-0001	24 OF 65	D00

BUDGET REF.	LOCATION	SIZE	CLASS	SERIAL NO.	SHEET	REVISION

TITLE: SUPPORT FOR HOT INSULATION & FIREPROOFING (CONT'D)

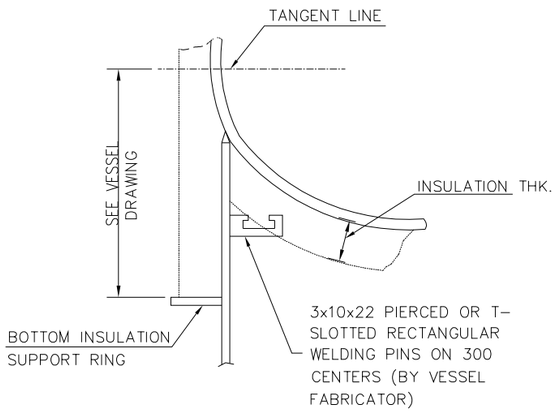

DETAIL 1

FOR SKIRT SUPPORT ONLY SEE NOTE 6 FOR EXPOSED BOTTOM HEAD

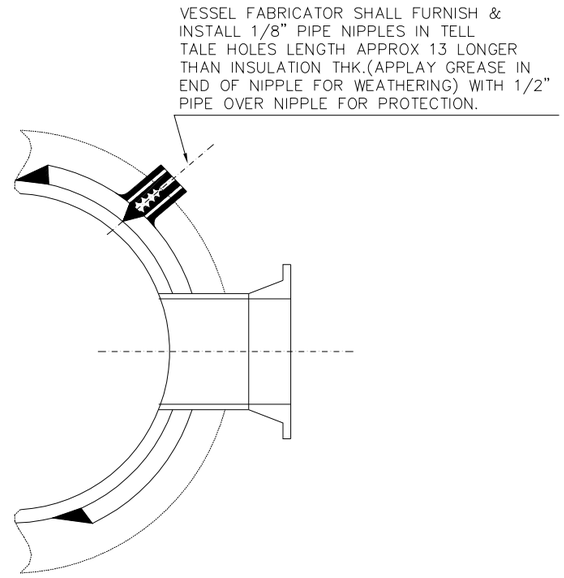

REINFORCING PAD VENTING DETAIL

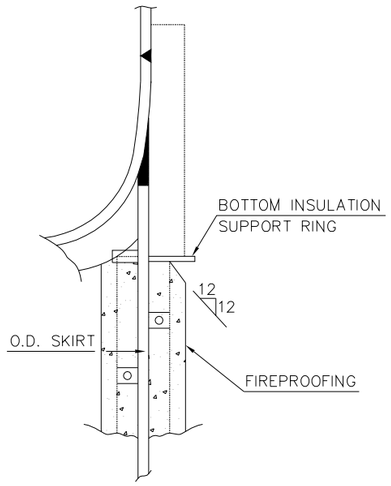

DETAIL 2

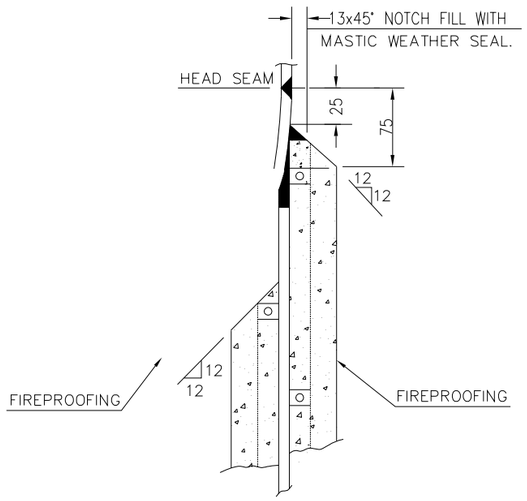

DETAIL 2
UN-INSULATED

NOTES

1- ALL DIMENSIONS ARE IN MM.
2- INSULATION THICKNESS "t" AND TYPE OF RING SHALL BE AS SHOWN ON ENGINEERING DWG.
3- MATERIALS SHALL BE AS FOLLOWS :
PARTS NOT WELDED TO SHELL . . . SA36 OR EQUIVALENT
PARTS WELDED TO SHELL . . . SEE ENG'G DWG.
4- SUPPORT RING AND LUG SHALL BE CONTINUOUSLY WELDED TO SHELL. IN CASE OF TYPE 1, INTERMITTENT FILLET WELDS MAY BE USED.
5- FOR BOTTOM HEAD, IN CASE OF VESSEL INSIDE DIAMETER EXCEEDS 3000 MM, M10 NUTS SHALL BE WELDED IN 450MM SQUARE PITCH. ON OUTSIDE SURFACE OF BOTTOM HEAD, M10 STUD BOLTS (T+30 MM) LENGTH AND NUTS SHALL BE PROVIDED.
6- FOR COLD INSULATION, IN CASE OF VESSEL INSIDE DIAMETER EXCEEDS 3000 MM AND DIMENSION H EXCEEDS 200MM, U3/8 NUTS SHALL BE WELDED ON SKIRT INSIDE IN 600 MM PITCH IN THE POSITION WITH H/2 FROM LOWEST SUPPORT RING. M10 STUD BOLTS OF (T+30MM) LENGTH AND NUTS SHALL BE PROVIDED.
7- POSITION OF SUPPORT RINGS SHALL BE SUITABLY DETERMINED BY VESSEL VENDOR, USING DIMENSIONS "P" AND "Q".
8- FOR VESSELS WITH DESIGN TEMPERATURE OF 400°C AND OVER, AIR SPACE SHALL BE PROVIDED. A MINIMUM AIR SPACE "Z" SHALL NOT BE LESS THAN SPECIFIED ON THE FOLLOWING TABLE-1. ALSO "Z" SHALL IN NO CASE BE LESS THAN Z= RT R: SKIRT MEAN RADIUS, t: SKIRT THICKENS.
9- FOR VESSELS WITHOUT INSULATION, SUPPORT PLATES SHALL BE PROVIDED AS END PLATES OF FIRE PROTECTION.

LEGEND

REFERENCE DRAWING	DRG. No.
**********	******

KEY PLAN

REV.	DATE	P.O.I.S	PREP.	CHK.	APP.	AUT.
D00	JUL.2021	IFI	M.Jaghamejad	M.Fakharian	Sh.Ghalikar	**.**

REV.	DESCRIPTION	CHECKED BY	CHECKED DATE	REV. APPR. BY	REV. APPR. DATE
***	**********	**.**	***.****	**.**	***.****

PROJECT NAME: BINAK OILFIELD DEVELOPMENT SURFACE WORK PACKAGES GENERAL

PROJECT NO.: 971020

EPC CONTRACTOR: HIRGAN ENERGY – DESIGN & INSPECTION COMPANIES

OWNER CONTRACTOR: PEDCO — PETROIRAN DEVELOPMENT COMPANY

BINAK OILFIELD DEVELOPMENT
SURFACE WORK PACKAGES
GENERAL

DATE	SCALE	DRAWING BY	CHECKED BY	PROJECT ENG.

(VENDOR TITLE BLOCK)**

DRAWING TITLE:
STANDARD DETAIL DRAWING FOR PRESSURE VESSELS AND HEAT EXCHANGERS
(SUPPORT FOR HOT INSULATION AND FIREPROOFING)

NO CONSTRUCTION PERMITTED UNLESS DRAWING APPROVED

APPROVED FOR CONSTRUCTION BY: DATE:

SCALE	SIZE	DRAWING NO.	SHEET NO.	REV.	BUDGET REF.	LOCATION	SIZE	CLASS	SERIAL NO.	SHEET	REVISION
As Shown	A3	BK-GNRAL-PEDCO-000-ME-DW-0001	25 OF 55	D00							

TITLE: INSULATION SUPPORT FOR HORIZONTAL VESSELS

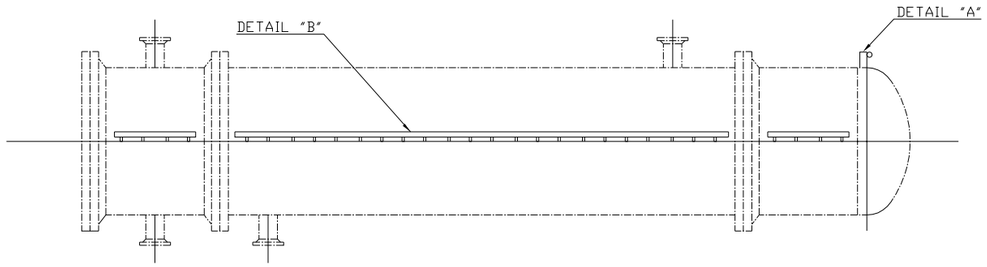

TYP. APPLICATION OF INSULATION SUPPORTS

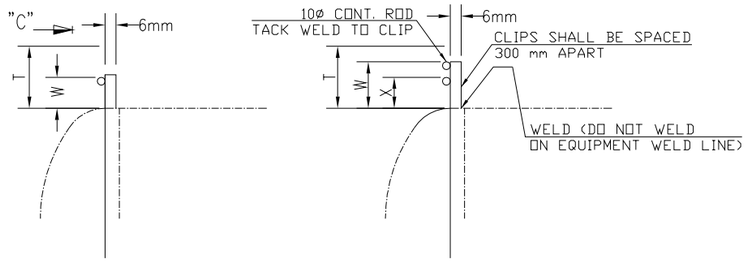

ONE LAYER

MULTILAYER

DETAIL "A"

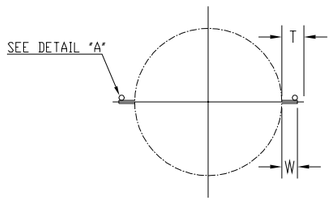

DETAIL "B'

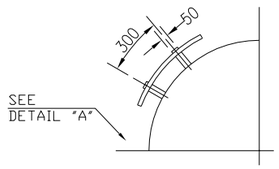

VIEW "C"

T	W	X	Y
40	20	–	25
50	40	–	40
65	50	–	50
75	60	–	50
90	65	40	65
100	75	50	75
115	90	50	75
125	100	65	90
140	115	65	90
150	125	75	100
165	140	120	100
175	150	125	100
190	165	140	100
200	175	150	100

Y = CLIP LENGTH

NOTES

1- INSULATION SUPPORT BY EQUIPMENT FABRICATOR.
2- FOR HORIZONTAL EQUIPMENT 1.83 M OUTSIDE DIAMETER AND LESS, INSULATION SUPPORT DETAIL "B" WILL NOT BE REQ'D.
3- FOR HORIZONTAL EQUIPMENT 0.61 M OUTSIDE DIAMETER AND LESS, INSULATION SUPPORT DETAIL "A" WILL NOT BE REQ'D.
4- DIMENSION T IS EQUAL TO THE THICK. OF INSULATION (WITHOUT JACKET OR OTHER FINISH).

LEGEND

REFERENCE DRAWING	DRG. No.
**********	******

KEY PLAN

REV.	DATE	P.O.I.S	PREP.	CHK.	APP.	AUT.
D00	JUL.2021	IFI	M.Asgharnejad	M.Fakharian	Sh.Ghalikar	**.**

REV.	DESCRIPTION	BY	DATE	BY	DATE
***	**********	**.**	***.****	**.**	***.****
		CHECKED		REV. APPR.	

PROJECT NAME: BINAK OILFIELD DEVELOPMENT SURFACE WORK PACKAGES GENERAL

PROJECT NO.: 971020

EPC CONTRACTOR: HIRGAN ENERGY – DESIGN & INSPECTION COMPANIES

OPERATOR CONTRACTOR: PETROIRAN DEVELOPMENT COMPANY (PEDCO)

BINAK OILFIELD DEVELOPMENT SURFACE WORK PACKAGES GENERAL

DATE	SCALE	DRAWING BY	CHECKED BY	PROJECT ENG.

NO CONSTRUCTION PERMITTED UNLESS DRAWING APPROVED

APPROVED FOR CONSTRUCTION | BY: | DATE:

(VENDOR TITLE BLOCK)**

DRAWING TITLE: STANDARD DETAIL DRAWING FOR PRESSURE VESSELS AND HEAT EXCHANGERS (INSULATION SUPPORT FOR HORIZONTAL VESSELS)

SCALE	SIZE	DRAWING NO.	SHEET NO.	REV.
As Shown	A3	BK-GNRAL-PEDCO-000-ME-DW-0001	26 OF 65	D00

BUDGET REF.	LOCATION	SIZE	CLASS	SERIAL NO.	SHEET	REVISION

TITLE: NAMEPLATE BRACKET

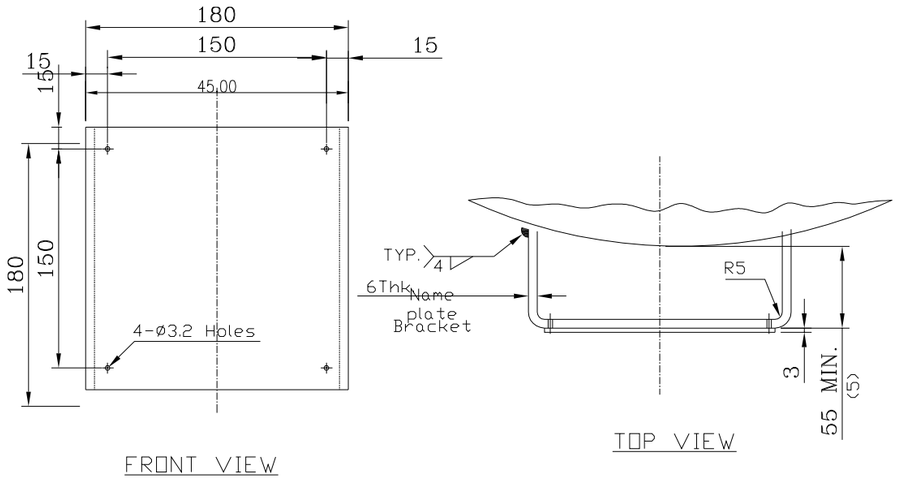

Nameplate Bracket For Vertical Vessels

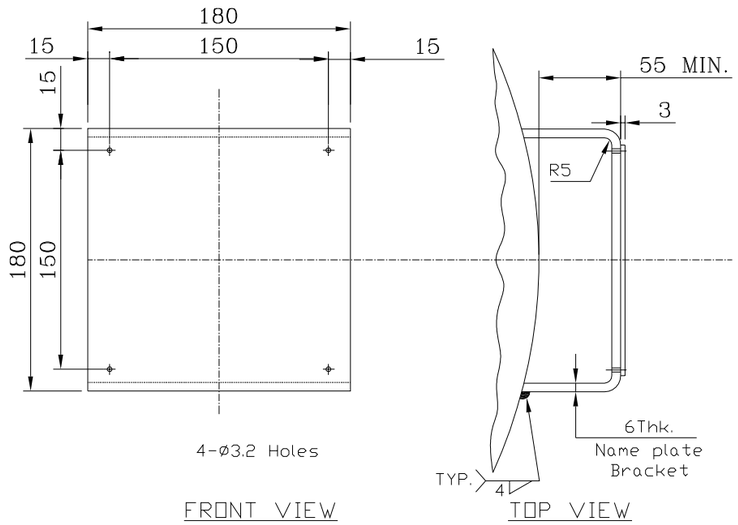

Nameplate Bracket For Horizontal Vessels

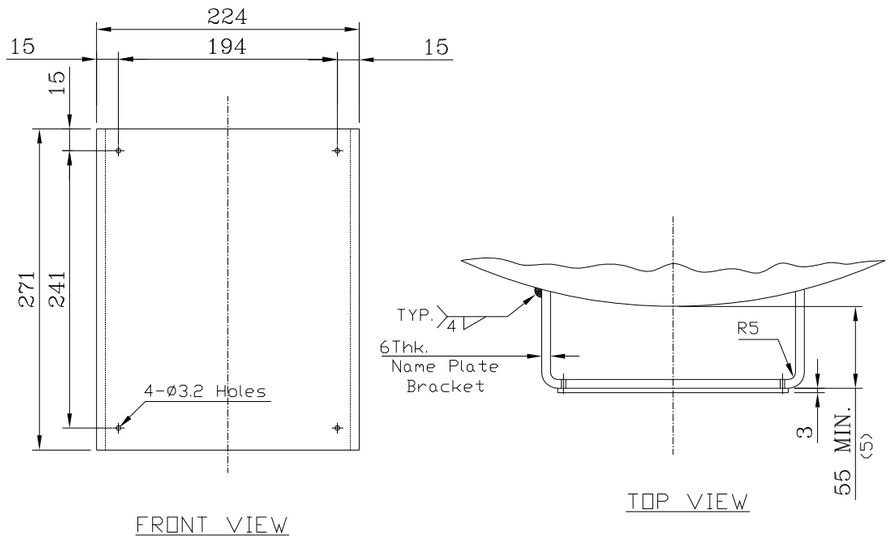

NAMEPLATE BRACKET FOR VERTICAL SHELL & TUBE HEAT EXCHANGERS

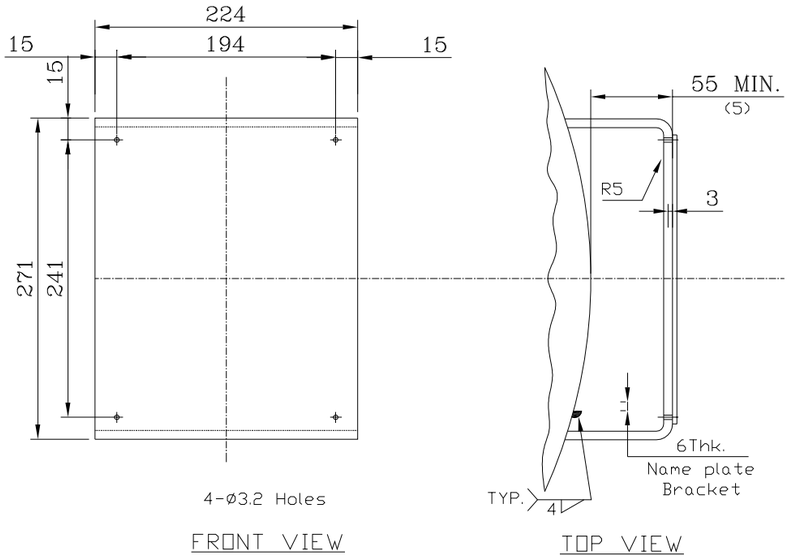

NAMEPLATE BRACKET FOR HORIZONTAL SHELL & TUBE HEAT EXCHANGERS

NOTES

LEGEND

REFERENCE DRAWING	DRG. No.
**********	******

KEY PLAN

REV.	DESCRIPTION	BY	DATE	BY	DATE
***	**********	**.**	***.****	**.**	***.****
		CHECKED		REV. APPR.	

REV.	DATE	P.O.I.S	PREP.	CHK.	APP.	AUT.
D00	JUL.2021	IFI	M.Jaghernejad	M.Fakharian	Sh.Ghalikar	**.**

PROJECT NAME: BINAK OILFIELD DEVELOPMENT SURFACE WORK PACKAGES GENERAL

PROJECT NO.: 971020

EPC CONTRACTOR: HIRGAN ENERGY – DESIGN & INSPECTION COMPANIES

SPONSERD CONTRACTOR: PETROIRAN DEVELOPMENT COMPANY (PEDCO)

BINAK OILFIELD DEVELOPMENT SURFACE WORK PACKAGES GENERAL

DATE	SCALE	DRAWING BY	CHECKED BY	PROJECT ENG.

NO CONSTRUCTION PERMITTED UNLESS DRAWING APPROVED

APPROVED FOR CONSTRUCTION | BY: | DATE:

(VENDOR TITLE BLOCK)**

DRAWING TITLE: STANDARD DETAIL DRAWING FOR PRESSURE VESSELS AND HEAT EXCHANGERS (NAMEPLATE BRACKET)

SCALE	SIZE	DRAWING NO.	SHEET NO.	REV.
As Shown	A3	BK-GNRAL-PEDCO-000-ME-DW-0001	27 OF 55	D00

BUDGET REF.	LOCATION	SIZE	CLASS	SERIAL NO.	SHEET	REVISION

TITLE: NAMEPLATE BRACKET (CONT'D)

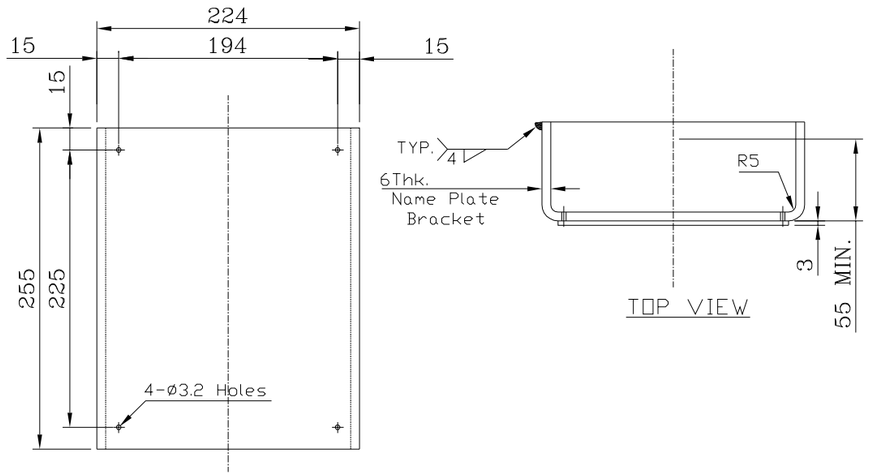

FRONT VIEW

NAMEPLATE BRACKET FOR AIR COOLED HEAT EXCHANGERS

NOTES

LEGEND

KEY PLAN

REFERENCE DRAWING	DRG. No.
**********	******

REV.	DESCRIPTION	CHECKED BY	CHECKED DATE	REV. APPR. BY	REV. APPR. DATE
***	**********	**.**	***.****	**.**	***.****

REV.	DATE	P.O.I.S	PREP.	CHK.	APP.	AUT.
D00	JUL.2021	IFI	M.Jaghamejad	M.Fakharian	Sh.Ghalikar	**.**

PROJECT NAME: BINAK OILFIELD DEVELOPMENT SURFACE WORK PACKAGES GENERAL

PROJECT NO.: 971020

EPC CONTRACTOR: HIRGAN ENERGY – DESIGN & INSPECTION COMPANIES

GENERAL CONTRACTOR: PETROIRAN DEVELOPMENT COMPANY (PEDCO)

BINAK OILFIELD DEVELOPMENT
SURFACE WORK PACKAGES
GENERAL

DATE	SCALE	DRAWING BY	CHECKED BY	PROJECT ENG.

(VENDOR TITLE BLOCK)**

DRAWING TITLE:
STANDARD DETAIL DRAWING FOR PRESSURE VESSELS AND HEAT EXCHANGERS
(NAMEPLATE BRACKET)

NO CONSTRUCTION PERMITTED UNLESS DRAWING APPROVED

APPROVED FOR CONSTRUCTION BY: DATE:

SCALE	SIZE	DRAWING NO.	SHEET NO.	REV.
As Shown	A3	BK-GNRAL-PEDCO-000-ME-DW-0001	28 OF 65	D00

BUDGET REF.	LOCATION	SIZE	CLASS	SERIAL NO.	SHEET	REVISION

TITLE: DIMENSIONAL TOLERANCES FOR VERTICAL VESSELS

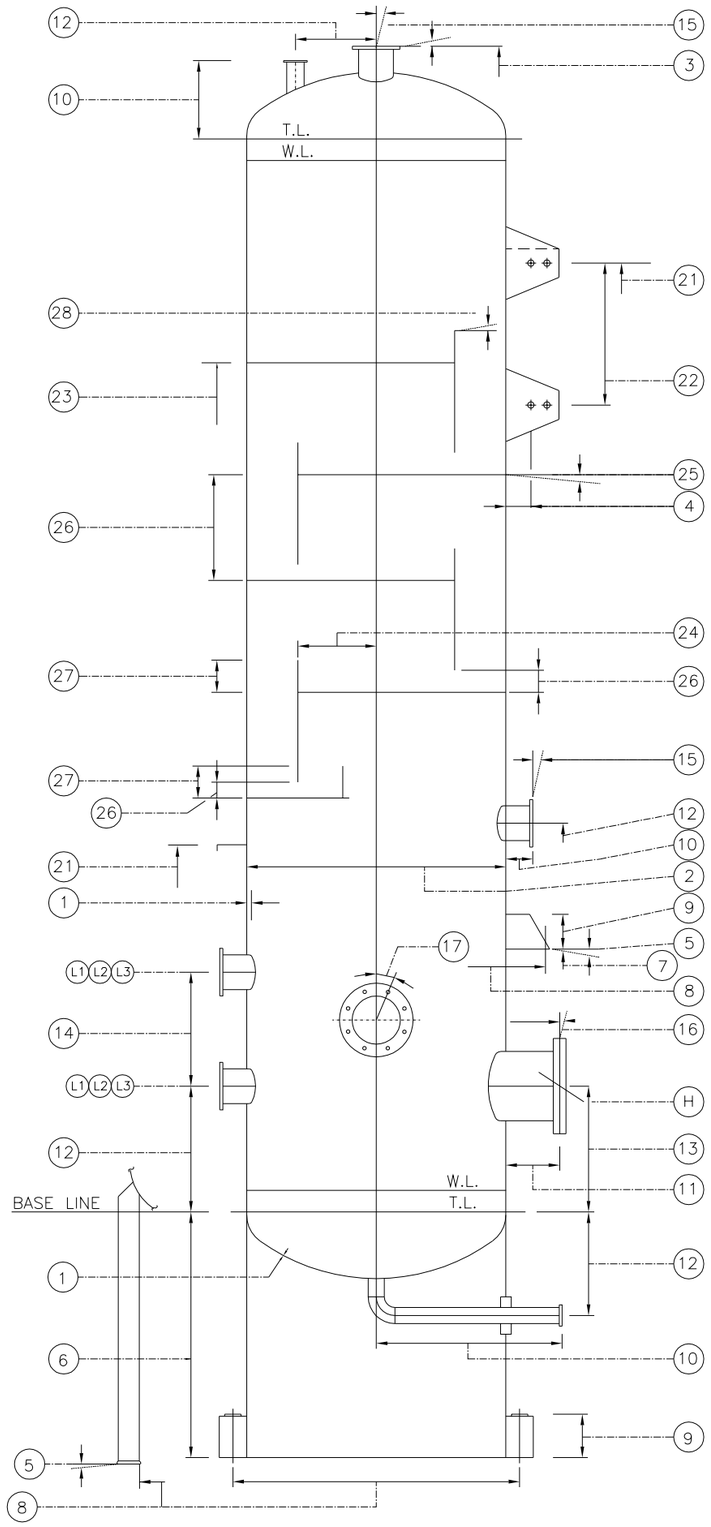

1- MINIMUM THICKNESS REQUIRED IS SHOWN ON GENERAL GUIDE DRAWING.

2- OUT-OF-ROUNDNESS : IN ACCORDANCE WITH A.S.M.E. CODE SECTION VIII DIVISION 1 PARA. UG. 80 (TOLERANCE ON SHELL) : DIAMETRAL DIFFERENCE MEASURED FROM CIRCUMFERENTIAL DEVELOPMENT

	SHELL DIA.	⩽1200	>1200 , ⩽2100	>2100 , ⩽4800	>4800
TOLERANCE	THK. ≤ 60mm	±3mm	±4.5mm	±6mm	±7.5mm
	THK. > 60mm	±4.5mm	±6mm	±7.5mm	±12mm

3- DISTANCE BETWEEN BASE LINE AND TOP FLANGE FACE. .....1mm/m MAX. 12mm

4- STRAIGHTNESS (BOW OF ANY LONGITUDINAL LINE) : LESS THAN 0.15% OF LENGTH. MAX. 40mm

5- OUT-OF-LEVEL OVER HORIZONTAL PLANE.

SHELL DIA.	⩽1200	>1200 , ⩽2100	>2100 , ⩽3000	>3000
TOLERANCE	±1.5mm	±3mm	±5mm	±6mm

6- HEIGHT OF SKIRT OR SUPPORT LEGS, ...$^{+0}_{-3}$mm

7- LEVEL OF ANCHOR SYSTEMS PROVIDED ON SHELL .....±3mm

8- ANCHOR CIRCLE - ORIENTATION OF HOLES FOR ANCHOR BOLTS.....±3mm

9- HEIGHT OF ANCHOR CHAIRS. .....±3mm

10- PROJECTION OF NOZZLE FOR PIPING. .....±3mm

11- PROJECTION OF MANHOLE. .....±6mm

12- LEVEL OF NOZZLE FOR PIPING. .....±3mm

13- LEVEL OF MANHOLE. .....±6mm

14- DISTANCE BETWEEN TWO INSTRUMENT CONNECTIONS. .....±1mm

15- FOR PIPING NOZZLE : DEVIATION FROM PARALLEL PLANE. .....±1/2°

16- FOR MANHOLE : DEVIATION FROM PARALLEL PLANE. .....±1°

17- PERMISSIBLE ROTATION OF FLANGE HOLES FROM MAJOR CENTER LINES.....±1.5mm

18- ORIENTATION OF NOZZLE FOR PIPING. .....±3mm

19- ORIENTATION OF MANHOLE. .....±6mm

20- ORIENTATION OF GUSSETS. .....±3mm

21- LEVEL OF GUSSETS AND EXTERNAL DEVICES. .....±6mm

22- DISTANCE BETWEEN TWO GUSSETS. .....±3mm

23- ELEVATION OF TRAY SUPPORTS FROM REFERENCE LINE. .....±6mm

24- POSITION OF DOWNCOMER SUPPORTS. .....$^{+9}_{-3}$mm

25- OUT-OF-LEVEL OF TRAY SUPPORTS SHALL BE AS REQUIRED BY TRAY MANUFACTURER.

26- DISTANCE : BETWEEN TWO TRAY SUPPORTS-BETWEEN TRAYS AND DOWNCOMER SUPPORT. ±3mm

27- HEIGHT OF WEIR ABOVE DOWNCOMER SUPPORT. .....±1.5mm

28- OUT-OF-LEVEL ACROSS TOP OF DOWNCOMER SUPPORTS. .....±3mm

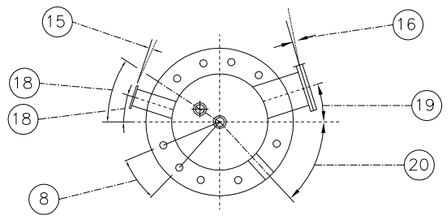

NOTES

LEGEND

REFERENCE DRAWING	DRG. No.
**********	******

KEY PLAN

REV.	DESCRIPTION	BY	DATE	BY	DATE
***	**********	**.**	***.****	**.**	***.****
		CHECKED		REV. APPR.	

REV.	DATE	P.O.I.S	PREP.	CHK.	APP.	AUT.
D00	JUL.2021	IFI	M.Angharnejad	M.Fakharian	Sh.Ghaliker	**.**

PROJECT NAME: BINAK OILFIELD DEVELOPMENT SURFACE WORK PACKAGES GENERAL

PROJECT NO.: 971020

EPC CONTRACTOR: HIRGAN ENERGY - DESIGN & INSPECTION COMPANIES

GENERAL CONTRACTOR: PETROIRAN DEVELOPMENT COMPANY (PEDCO)

BINAK OILFIELD DEVELOPMENT SURFACE WORK PACKAGES GENERAL

DATE	SCALE	DRAWING BY	CHECKED BY	PROJECT ENG.

(VENDOR TITLE BLOCK)**

DRAWING TITLE: STANDARD DETAIL DRAWING FOR PRESSURE VESSELS AND HEAT EXCHANGERS (DIMENSIONAL TOLERANCE FOR VERTICAL VESSELS)

SCALE	SIZE	DRAWING NO.	SHEET NO.	REV.
As Shown	A3	BK-GNRAL-PEDCO-000-ME-DW-0001	29 OF 65	D00

NO CONSTRUCTION PERMITTED UNLESS DRAWING APPROVED

APPROVED FOR CONSTRUCTION BY: DATE:

BUDGET REF.	LOCATION	SIZE	CLASS	SERIAL NO.	SHEET	REVISION

TITLE: DIMENSIONAL TOLERANCES FOR HORIZONTAL VESSELS

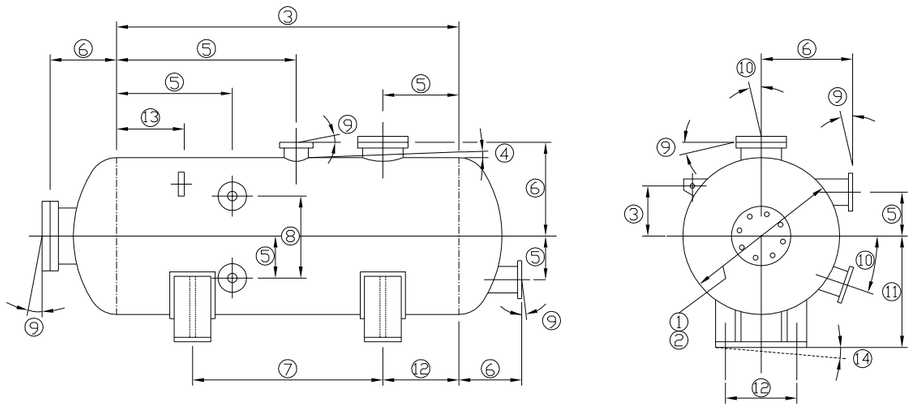

REMARKES :

1. TOLERANCES SHALL NOT CUMULATE TO THE EXTENT THAT INTERFERENCES BETWEEN INTERNAL AND EXTERNAL PARTS WOULD EXIST OR THAT INTENDED FUNCTION OF ANY PART WOULD BE RESTRICTED.
2. SUPPLEMENTARY OR MORE STRINGENT TOLERANCES IF REQUIRED SHALL BE SPECIFIED ON ENGINEERING DATA SHEET.

PERMISSIBLE DEVIATIONS FROM SPECIFIED DIMENSIONS

SHELL

(1) DIAMETER :) AS PERMITTED BY DESIGN CODE,
) e.g. AD–MERKBLATT H 1,5.1.1/5.1.2;
(2) OUT OF ROUNDNESS :) ASME CODE, SEC. VIII,UG–80

(3) DISTANCE BETWEEM REFERENCE PLANES : ± 1.5mm PER METER OR 15mm,WHICHEVER IS SMALLER

(4) MAX. SHELL DEVIATION FROM STRAIGHT :

FOR A VESSEL LENGTH ≤15m 1.0mm PER m LENGTH
FOR A VESSEL LENGTH >15m 0.3mm PER m LENGTH PLUS 8mm

NOZZLES

(5) DISTANCE OF NOZZLE AXIS FROM REFERENCE PLANE OR VESSEL :

NOZZLES ± 5mm
MANHOLES ± 10mm

(6) DISTANCE OF NOZZLE FLANGE FACE FROM REFERENCE PLANE OR VESSEL :

NOZZLES ± 3mm
MANHOLES ± 10mm

(7) SPACING OF VESSEL SUPPORT SADDLES : ± 3.0mm

(8) DISTANCE BETWEEN AXIS OF ANY PAIR
OR INSTRUMENT CONNECTIONS : ± 1.5mm
MOREOVER, FLANGE FACES SHALL BE AN EXACTLY SAME PLANE.

(9) ANGULAR DEVIATION OF NOZZLE FLANGE FACE :

NOZZLES 0.5°
MANHOLES 1.0°

FOR INSTRUMENTS CORRELATED NOZZLES REFER ALSO TO (8).

(10) ANGULAR DEVIATION OF NOZZLES FROM REFERENCE CENTERLINE :

NOZZLES 0.5°
MANHOLES 1.0°

DEVIATION MEASURED ON THE CIRCUMFERENCE
OF THE VESSEL : 10mm MAX.

FOR INSTRUMENTS CORRELATED NOZZLES REFER ALSO TO (8).

FOOTING AND CLAWS

(11) DISTANCE FROM REFERENCE PLANE TO SUPPORT BASE : +0–6.5mm

(12) SUPPORT SADDLE HOLES SPACING OR DISTANCE
FROM REFERENCE PLANE (INDEPENDENT OF DIAMETER) : ± 3.0mm

(13) DISTANCE FROM REFFERENCE PLANE OR VESSEL CENTERLINE OF
WELDED ELEMENTS FOR SUPPORT OR REINFORCEMENT : ± 5.0mm

(14) SUPPORT SADDLE OUT OF LEVEL (AS MEASURED ACROSS
VESSEL DIAMETER) :

DIAMETER UP TO 1200mm ± 3.0mm
OVER 1200mm UP TO 2100mm ± 5.0mm

NOTES

LEGEND

REFERENCE DRAWING	DRG. No.
**********	******

KEY PLAN

REV.	DATE	P.O.I.S	PREP.	CHK.	APP.	AUT.
D00	JUL.2021	IFI	M.Jaghargnejad	M.Fakharian	Sh.Ghalikar	**.**

REV.	DESCRIPTION	CHECKED BY	CHECKED DATE	REV. APPR. BY	REV. APPR. DATE
***	**********	**.**	***.****	**.**	***.****

PROJECT NAME: BINAK OILFIELD DEVELOPMENT SURFACE WORK PACKAGES GENERAL

PROJECT NO.: 971020

EPC CONTRACTOR: HIRGAN ENERGY – DESIGN & INSPECTION COMPANIES

ENGINEERD CONTRACTOR: PEDCO — PETROIRAN DEVELOPMENT COMPANY

BINAK OILFIELD DEVELOPMENT
SURFACE WORK PACKAGES
GENERAL

DATE	SCALE	DRAWING BY	CHECKED BY	PROJECT ENG.

(VENDOR TITLE BLOCK)**

DRAWING TITLE:
STANDARD DETAIL DRAWING FOR PRESSURE VESSELS AND HEAT EXCHANGERS
(DIMENSIONAL TOLERANCES FOR HORIZONTAL VESSELS)

NO CONSTRUCTION PERMITTED UNLESS DRAWING APPROVED

APPROVED FOR CONSTRUCTION BY: DATE:

SCALE	SIZE	DRAWING NO.	SHEET NO.	REV.
As Shown	A3	BK–GNRAL–PEDCO–000–ME–DW–0001	30 OF 65	D00

BUDGET REF.	LOCATION	SIZE	CLASS	SERIAL NO.	SHEET	REVISION

TITLE: PLATFORM , LADDER AND HANDRAIL

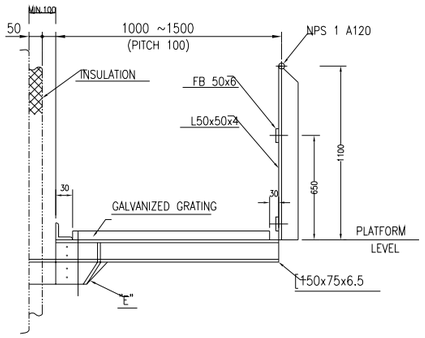

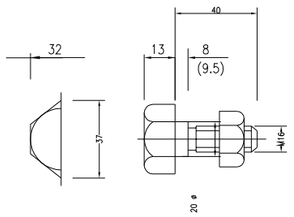

STEP-BOLT/NUT DETAIL
( ) SIZE FOR LADDER

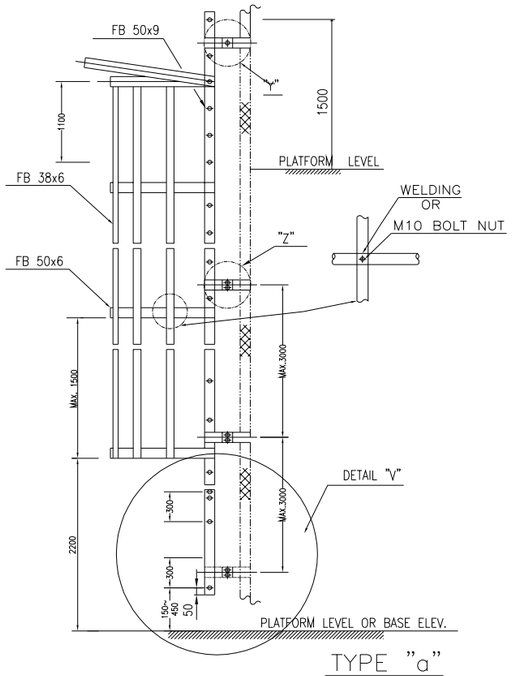

TYPE "a"

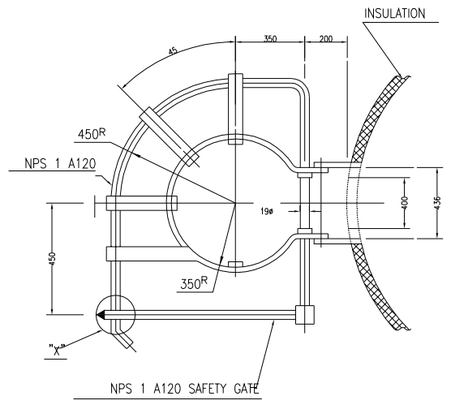

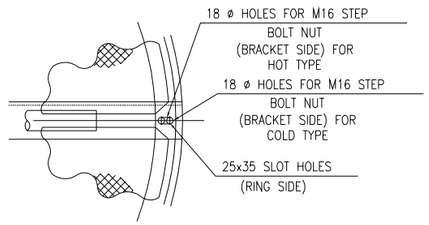

DETAIL "W"

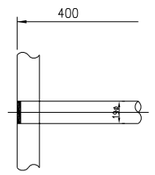

STEP BAR WELD DETAIL

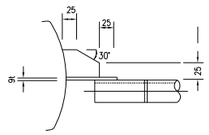

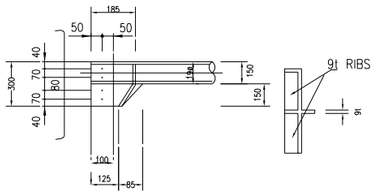

DETAIL "E"

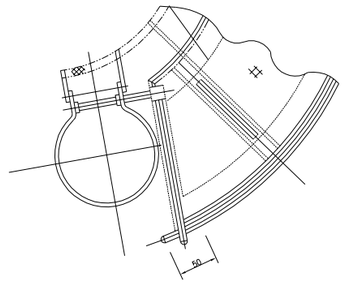

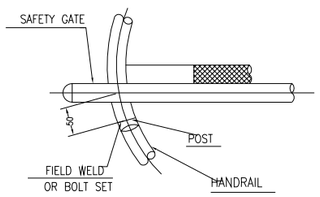

DETAIL "X"

NOTES

1- ALL DIMENSIONS ARE IN MM.
2- MATERIAL SHALL BE AS FOLLOWS :
BOLT NUT . . . DEPENDS ON OPERATING TEMPERATURE.
-19°C & OVER . . . SA307GrB OR EQUIVALENT.
-20°C ~ -100°C . . . SA320GrL7/A194GrL4 OR 304SS OR EQUIVALENT
-101°C & UNDER . . . SA304SS OR EQUIVALENT WOOD . . . WITHE OAK STRUCTURAL STEEL . . . SA36 OR EQUIVALENT
LUG . . . SEE ENG'S DRG.
3-HIGHER OF THE TWO VALUES ARE TO BE CONSIDERED AS LIVE LOAD
(A) DISTRIBUTED LOAD OF 250 Kg/m2
(B) CONCENTRATED LOAD OF 450 Kg
4- IN CASE PLATFORM WIDTH EXCEEDS 1000MM, THE FLOOR SHALL BE SUITABLY REINFORCED TO PREVENT FLOOR FROM DEFLECTION.
5-IT SHOULD BE MODIFIED THE LOWEST PART OF LADDER TO AVOID INTERFERENCE WITH THE BASE BLOCK, MENTIONED ABOVE SHALL BE APPLIED TO THE VERTICAL VESSELS ALL OF THE FOLLOWING CONDITIONS :
a-CONTINUOUS RING COMPRESSION PLATE OF BASE BLOCK.
b- ANCHOR BOLT SIZES M64 AND OVER.

LEGEND

REFERENCE DRAWING	DRG. No.
**********	******

KEY PLAN

REV.	DATE	P.O.I.S	PREP.	CHK.	APP.	AUT.
D00	JUL.2021	IFI	M.Asgharnejad	M.Fakharian	Sh.Ghalikar	**.**

REV.	DESCRIPTION	CHECKED BY	CHECKED DATE	REV. APPR. BY	REV. APPR. DATE
***	**********	**.**	***.****	**.**	***.****

PROJECT NAME: BINAK OILFIELD DEVELOPMENT SURFACE WORK PACKAGES GENERAL

PROJECT NO.: 971020

EPC CONTRACTOR: HIRGAN ENERGY – DESIGN & INSPECTION COMPANIES

OWNER CONTRACTOR: PETROIRAN DEVELOPMENT COMPANY (PEDCO)

BINAK OILFIELD DEVELOPMENT
SURFACE WORK PACKAGES
GENERAL

DATE	SCALE	DRAWING BY	CHECKED BY	PROJECT ENG.

NO CONSTRUCTION PERMITTED UNLESS DRAWING APPROVED

APPROVED FOR CONSTRUCTION BY: DATE:

(VENDOR TITLE BLOCK)**

DRAWING TITLE:
STANDARD DETAIL DRAWING FOR PRESSURE VESSELS AND HEAT EXCHANGERS)
(PLATFORM ,LADDER AND HANDRAIL)

SCALE	SIZE	DRAWING NO.	SHEET NO.	REV.
As Shown	A3	BK-GNRAL-PEDCO-000-ME-DW-0001	31 OF 55	D00

BUDGET REF.	LOCATION	SIZE	CLASS	SERIAL NO.	SHEET	REVISION

TITLE: PLATFORM , LADDER AND HANDRAIL (CONT'D)

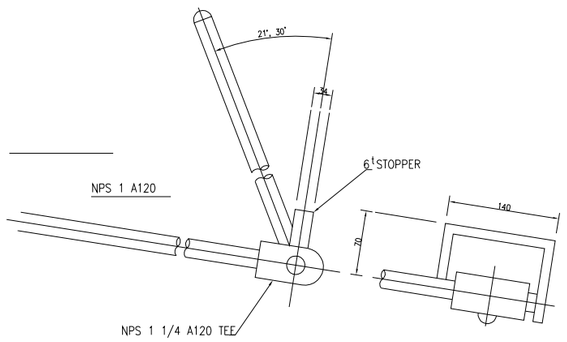

SAFETY GATE DETAIL

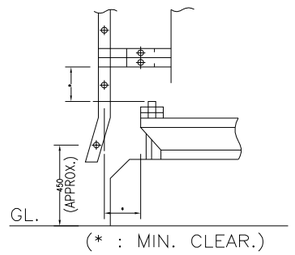

DETAIL "V"
(SEE NOTE 5)

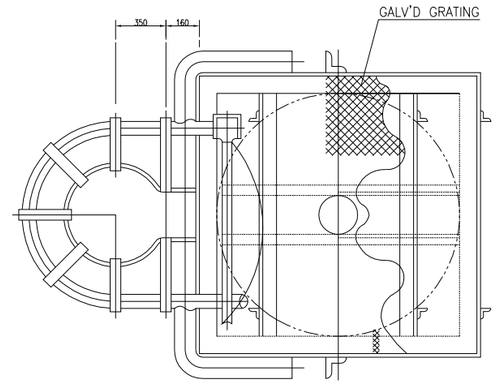

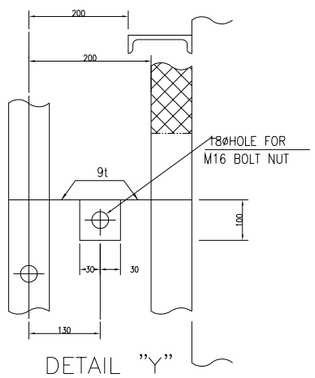

DETAIL "Y"

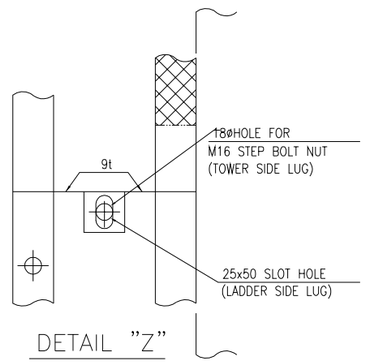

DETAIL "Z"

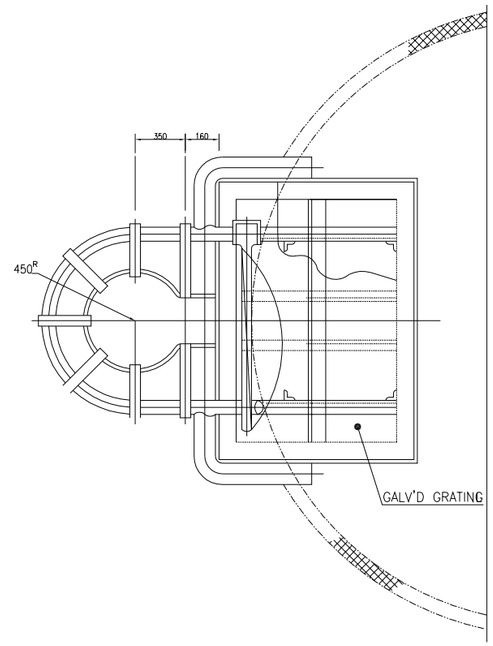

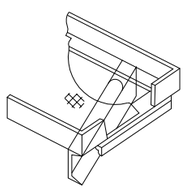

PLATFORM END DETAIL
(LADDER SIDE)

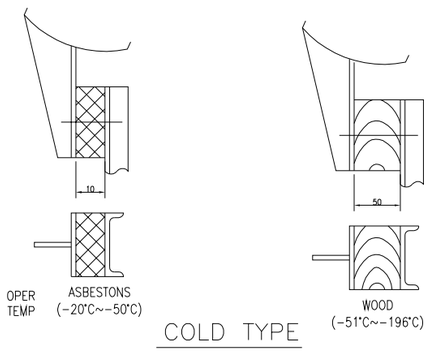

COLD TYPE

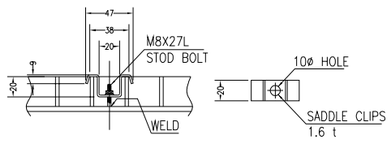

DETAIL "P'

NOTES

LEGEND

REFERENCE DRAWING	DRG. No.
**********	******

KEY PLAN

REV.	DATE	P.O.I.S	PREP.	CHK.	APP.	AUT.
D00	JUL.2021	IFI	M.Asgharnejad	M.Pakharian	Sh.Ghalikar	**.**

REV.	DESCRIPTION	BY	DATE	BY	DATE
		CHECKED		REV. APPR.	
***	**********	**.**	***.****	**.**	***.****

PROJECT NAME: BINAK OILFIELD DEVELOPMENT SURFACE WORK PACKAGES GENERAL

PROJECT NO.: 971020

EPC CONTRACTOR: HIRGAN ENERGY – DESIGN & INSPECTION COMPANIES

SPECIFIED CONTRACTOR: PETROIRAN DEVELOPMENT COMPANY (PEDCO)

BINAK OILFIELD DEVELOPMENT
SURFACE WORK PACKAGES
GENERAL

DATE	SCALE	DRAWING BY	CHECKED BY	PROJECT ENG.

(VENDOR TITLE BLOCK)**

DRAWING TITLE:
STANDARD DETAIL DRAWING FOR PRESSURE VESSELS AND HEAT EXCHANGERS)
(PLATFORM ,LADDER AND HANDRAIL)

NO CONSTRUCTION PERMITTED UNLESS DRAWING APPROVED

APPROVED FOR CONSTRUCTION BY: DATE:

SCALE	SIZE	DRAWING NO.	SHEET NO.	REV.	BUDGET REF.	LOCATION	SIZE	CLASS	SERIAL NO.	SHEET	REVISION
As Shown	A3	BK-GNRAL-PEDCO-000-ME-DW-0001	32 OF 55	D00							

TITLE: PLATFORM , LADDER AND HANDRAIL (CONT'D)

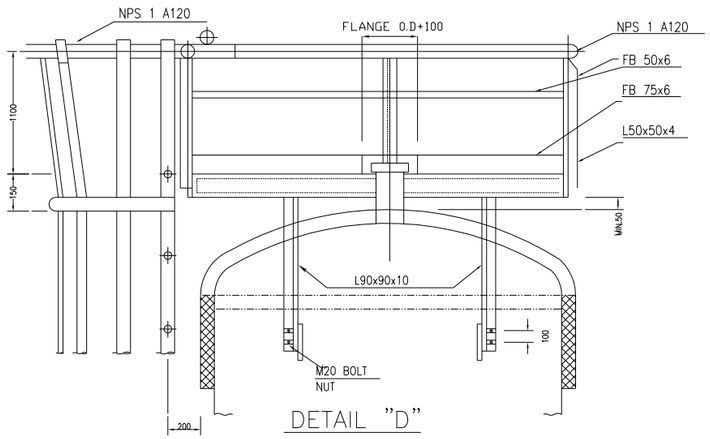

DETAIL "D"

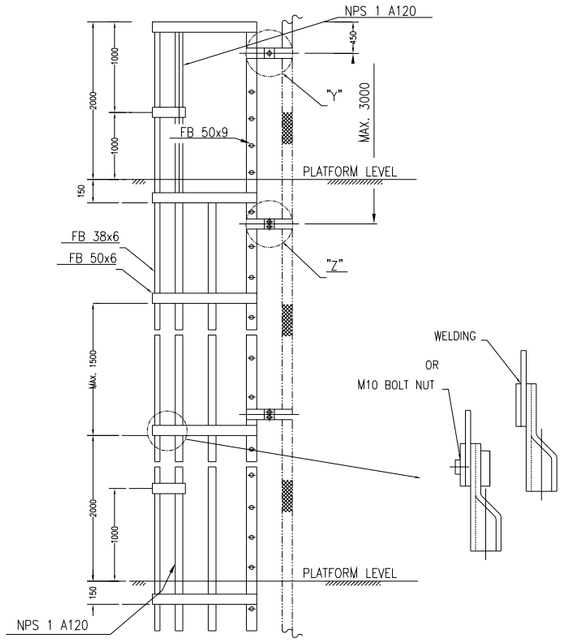

TYPE "B"

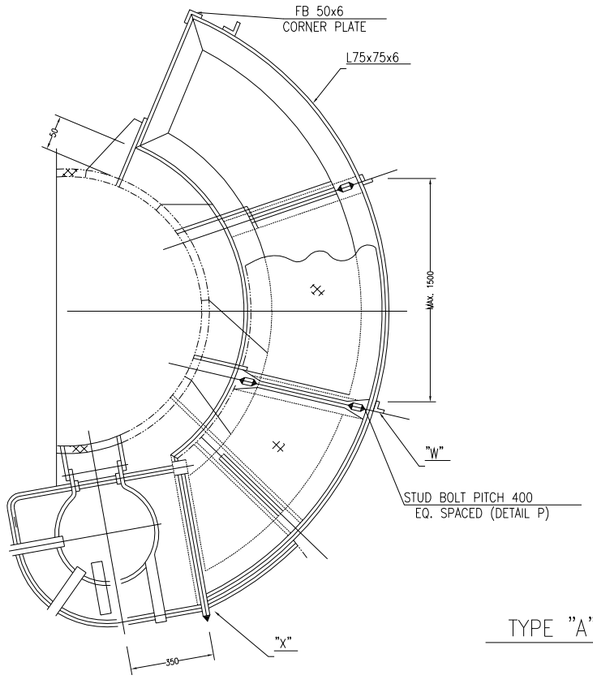

TYPE "A"

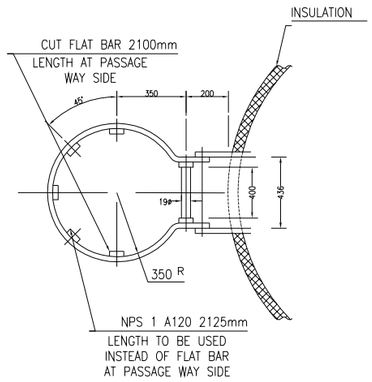

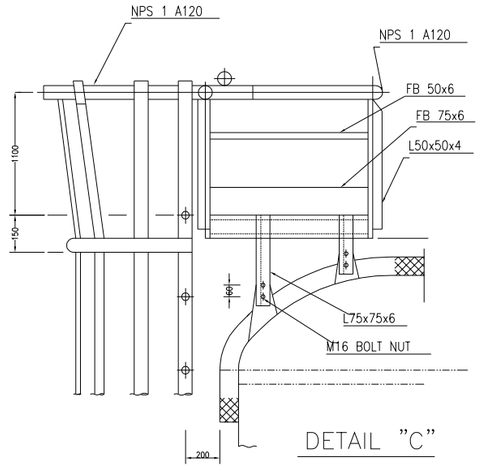

DETAIL "C"

NOTES

LEGEND

REFERENCE DRAWING	DRG. No.
**********	******

KEY PLAN

REV.	DESCRIPTION	BY	DATE	BY	DATE
***	**********	**.**	***.****	**.**	***.****
		CHECKED		REV. APPR.	

REV.	DATE	P.O.I.S	PREP.	CHK.	APP.	AUT.
D00	JUL.2021	IFI	M.Angharnejad	M.Fakharian	Sh.Ghalikar	**.**

PROJECT NAME: BINAK OILFIELD DEVELOPMENT SURFACE WORK PACKAGES GENERAL

PROJECT NO.: 971020

EPC CONTRACTOR: HIRGAN ENERGY – DESIGN & INSPECTION COMPANIES

~~SPECIFIED~~ CONTRACTOR: PETROIRAN DEVELOPMENT COMPANY (PEDCO)

BINAK OILFIELD DEVELOPMENT
SURFACE WORK PACKAGES
GENERAL

DATE	SCALE	DRAWING BY	CHECKED BY	PROJECT ENG.

(VENDOR TITLE BLOCK)**

DRAWING TITLE:
STANDARD DETAIL DRAWING FOR PRESSURE VESSELS AND HEAT EXCHANGERS)
(PLATFORM ,LADDER AND HANDRAIL)

NO CONSTRUCTION PERMITTED UNLESS DRAWING APPROVED

APPROVED FOR CONSTRUCTION BY: DATE:

SCALE	SIZE	DRAWING NO.	SHEET NO.	REV.
As Shown	A3	BK-GNRAL-PEDCO-000-ME-DW-0001	33 OF 55	D00

BUDGET REF.	LOCATION	SIZE	CLASS	SERIAL NO.	SHEET	REVISION

TITLE: BAFFLE FOR COLUMN AND DRUM

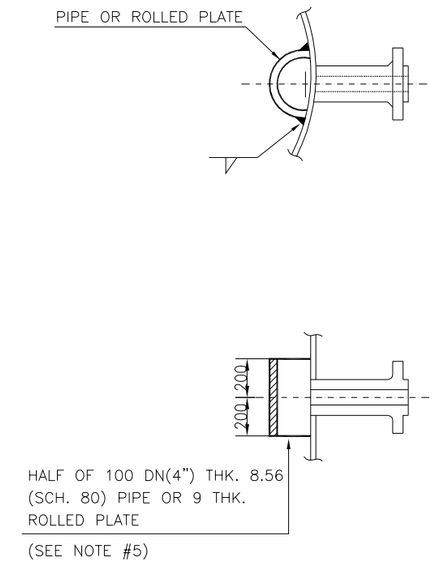

TYPE 1

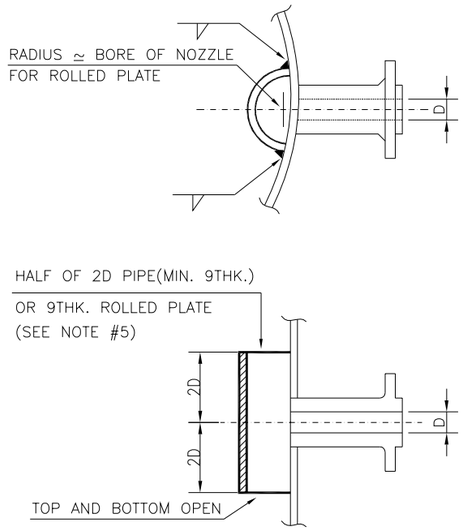

TYPE 2

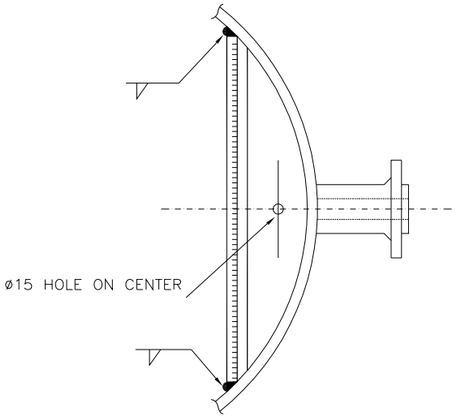

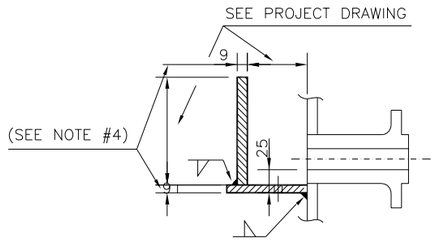

TYPE 3

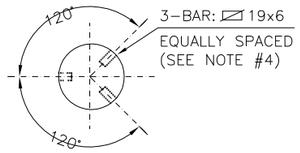

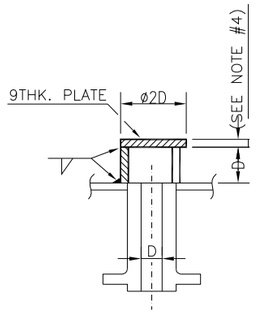

TYPE 4

NOTES

1- ALL DIMENSIONS ARE IN MILLIMETERS UNLESS OTHERWISE INDICATED.
2- MATERIALS OF BAFFLE PLATES AND PIPES SHALL BE AS SPECIFIED ON THE VESSEL DRAWING.
3- CONSTRUCTION DETAIL DIMENSIONS AND MATERIALS IN DRAWINGS OR DATA SHEET SHALL TAKE PRECEDENCE OVER THOSE SHOWN HEREON.
4- WHERE CORROSION ALLOWANCE EXCEEDS 3.0mm. , PLATE THK. AND PIPES. THK. SHALL BE INCREASED.
5- PLATE THICKNESS TO BE 6 FOR STAINLESS, ALLOY STEEL VESSELS, LINING OR CLADDED VESSELS.
6- WELDS SHALL BE CARRIED OUT AND INSPECTED AT SHOP AS PER VESSEL DESIGN CODE.
7- ALL WELD SHALL BE SAME AS BAFFLE THK. .

LEGEND

REFERENCE DRAWING	DRG. No.
**********	******

KEY PLAN

REV.	DESCRIPTION	BY	DATE	BY	DATE
***	**********	** **	*** ****	** **	*** ****
		CHECKED		REV. APPR.	

REV.	DATE	P.O.I.S	PREP.	CHK.	APP.	AUT.
D00	JUL.2021	IFI	M.Angharmejad	M.Fakharian	Sh.Ghalikar	** **

PROJECT NAME: BINAK OILFIELD DEVELOPMENT SURFACE WORK PACKAGES GENERAL

PROJECT NO.: 971020

EPC CONTRACTOR: HIRGAN ENERGY – DESIGN & INSPECTION COMPANIES

GENERAL CONTRACTOR: PETROIRAN DEVELOPMENT COMPANY — PEDCO

BINAK OILFIELD DEVELOPMENT
SURFACE WORK PACKAGES
GENERAL

DATE	SCALE	DRAWING BY	CHECKED BY	PROJECT ENG.

(VENDOR TITLE BLOCK)**

DRAWING TITLE:
STANDARD DETAIL DRAWING FOR PRESSURE VESSELS AND HEAT EXCHANGERS
(BAFFLE FOR COLUMN AND DRUM)

NO CONSTRUCTION PERMITTED UNLESS DRAWING APPROVED

APPROVED FOR CONSTRUCTION | BY: | DATE:

SCALE	SIZE	DRAWING NO.	SHEET NO.	REV.
As Shown	A3	BK-GNRAL-PEDCO-000-ME-DW-0001	34 OF 65	D00

BUDGET REF.	LOCATION	SIZE	CLASS	SERIAL NO.	SHEET	REVISION

TITLE: DAVIT FOR HORIZONTAL CONDENSERS & HEAT EXCHANGERS

DAVIT TYPE-1

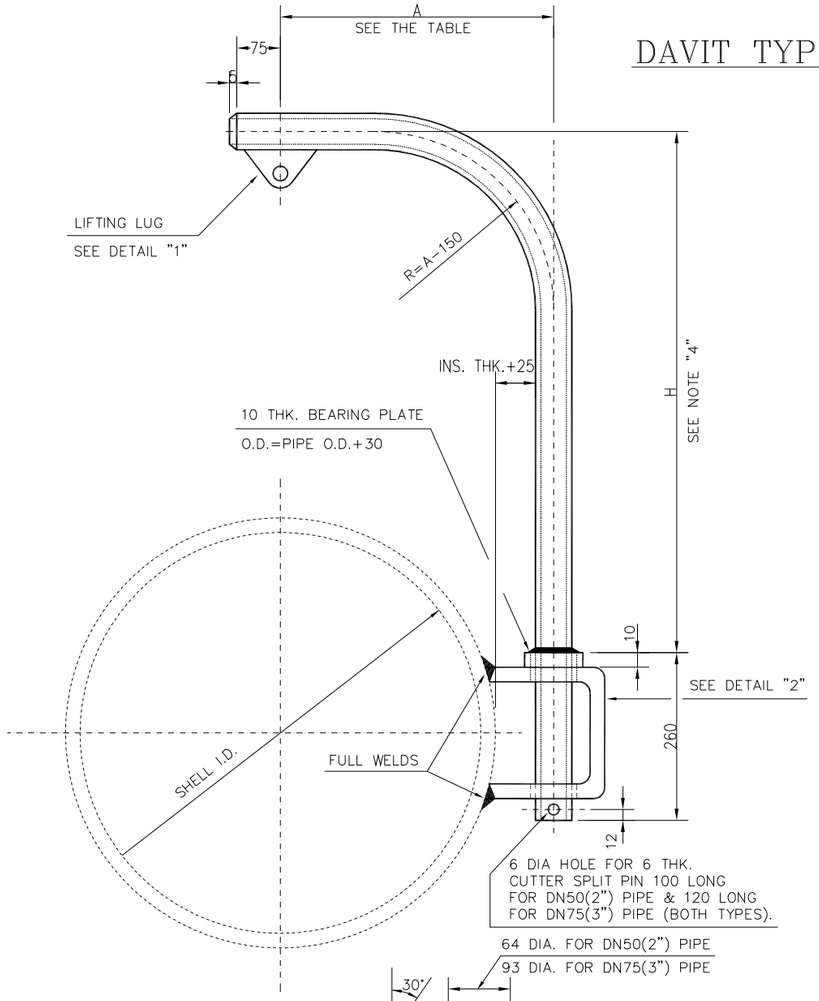

DAVIT TYPE-2

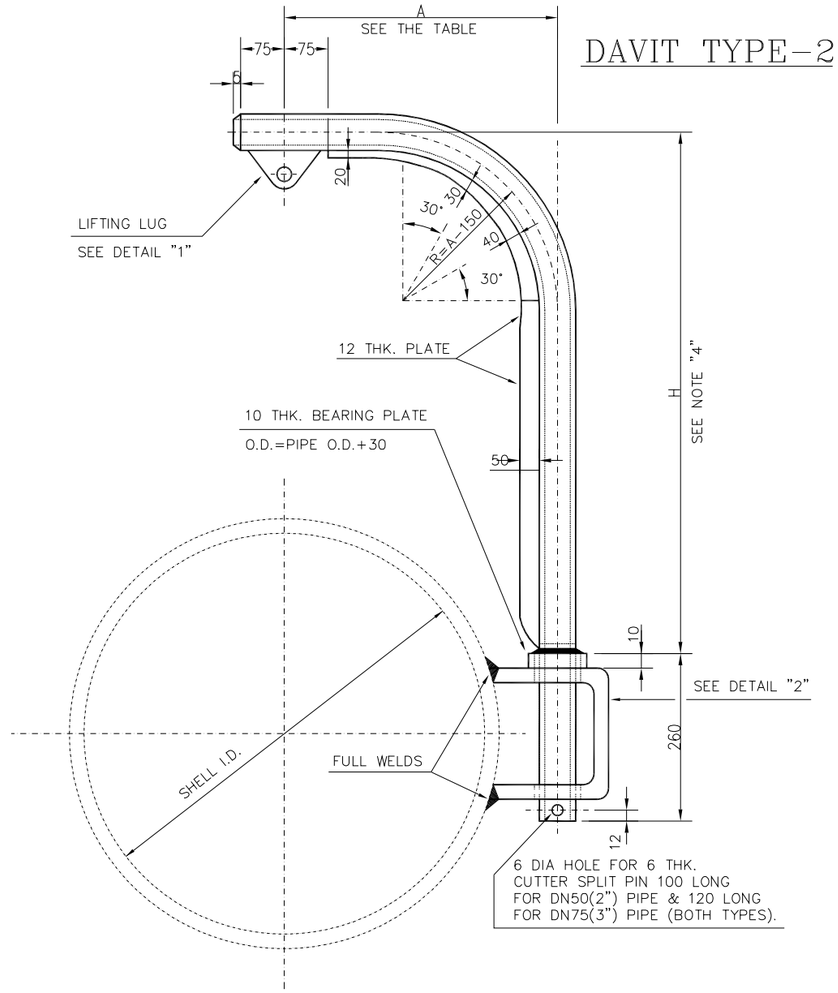

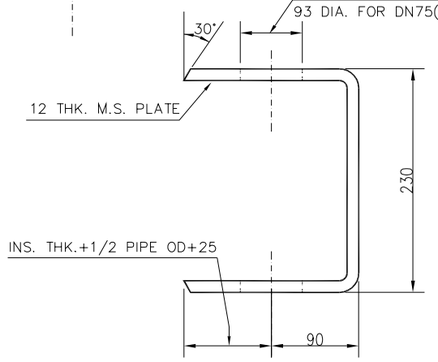

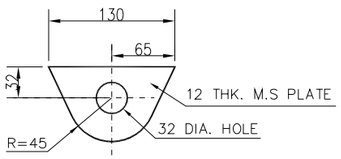

DETAIL-1

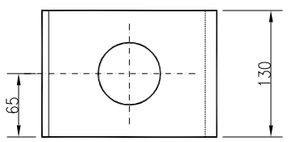

DETAIL-2

DIMENSION (A)	DAVIT TYPE 1			DAVIT TYPE 2
	DN50(2") PIPE SCH. 80	DN75(3") PIPE SCH. 40	DN75(3") PIPE SCH. 80	DN75(3") PIPE SCH. 40
	LOAD (Kg)	LOAD (Kg)	LOAD (Kg)	LOAD (Kg)
460	195	515	700	780
530	160	440	580	665
600	135	380	500	585
680	115	330	445	515
760	100	290	400	455
840	90	260	355	415
910	75	240	325	375
990	65	215	200	340
1070	55	200	270	315
1140	–	180	250	295
1220	–	165	235	270
1300	–	155	215	250
1370	–	145	200	240
1450	–	–	–	220
1520	–	–	–	

NOTES

1-ALL DIMENSIONS ARE IN MM.

2-ALL WELDS SHALL BE 6 MM FULL FILLET MIN.
3-PLATES SHALL BE IN ACC. WITH SA283 Gr.C & PIPES SHALL BE API 5L GR.B OR SA53 GR.B.

4-DIMENSION "H" IS CALCULATED AS FOLLOWS:

$$H = \frac{\text{SHELL O.D.}}{2} + 840$$

5-AN ALLOWANCE LOAD OF 45 Kg. HAS BEEN MADE FOR THE CHAIN BLOCK.

6-AT THE TIME OF FABRICATION DIMENSION "A" SHOULD BE ADJUST IN SUCH A WAY THAT THE LIFTING LUG ON THE DAVIT AT THE CENTER OF COVERING FLANGE TO BE AT THE SAME VERTICAL LINE.

7-IF DAVITS ARE INSTALLED ON STRESS RELIEVED SHELLS, THE WELD SHALL BE STRESS RELIEVED.

8-DAVITS SHALL BE PAINTED WITH ONE PRIMER COAT OF RED-LEAD AND ONE TOP COAT OF ALUMINIUM PAINTS.

LEGEND

REFERENCE DRAWING	DRG. No.
**********	******

KEY PLAN

REV.	DATE	P.O.I.S	PREP.	CHK.	APP.	AUT.
D00	JUL.2021	IFI	M.Jaghargojad	M.Fakharian	Sh.Ghalikar	** **

REV.	DESCRIPTION	CHECKED BY	CHECKED DATE	REV. APPR. BY	REV. APPR. DATE
***	**********	** **	*** ****	** **	*** ****

PROJECT NAME: BINAK OILFIELD DEVELOPMENT SURFACE WORK PACKAGES GENERAL

PROJECT NO.: 971020

EPC CONTRACTOR: HIRGAN ENERGY – DESIGN & INSPECTION COMPANIES

SENIOR CONTRACTOR: PETROIRAN DEVELOPMENT COMPANY (PEDCO)

BINAK OILFIELD DEVELOPMENT SURFACE WORK PACKAGES GENERAL

DATE	SCALE	DRAWING BY	CHECKED BY	PROJECT ENG.

(VENDOR TITLE BLOCK)**

DRAWING TITLE: STANDARD DETAIL DRAWING FOR PRESSURE VESSELS AND HEAT EXCHANGERS (DAVIT FOR HORIZONTAL CONDENSERS AND HEAT EXCHANGERS)

NO CONSTRUCTION PERMITTED UNLESS DRAWING APPROVED

APPROVED FOR CONSTRUCTION | BY: | DATE:

SCALE	SIZE	DRAWING NO.	SHEET NO.	REV.
As Shown	A3	BK-GNRAL-PEDCO-000-ME-DW-0001	35 OF 55	D00

BUDGET REF.	LOCATION	SIZE	CLASS	SERIAL NO.	SHEET	REVISION

TITLE: WEIRS FOR HORIZONTAL VESSELS

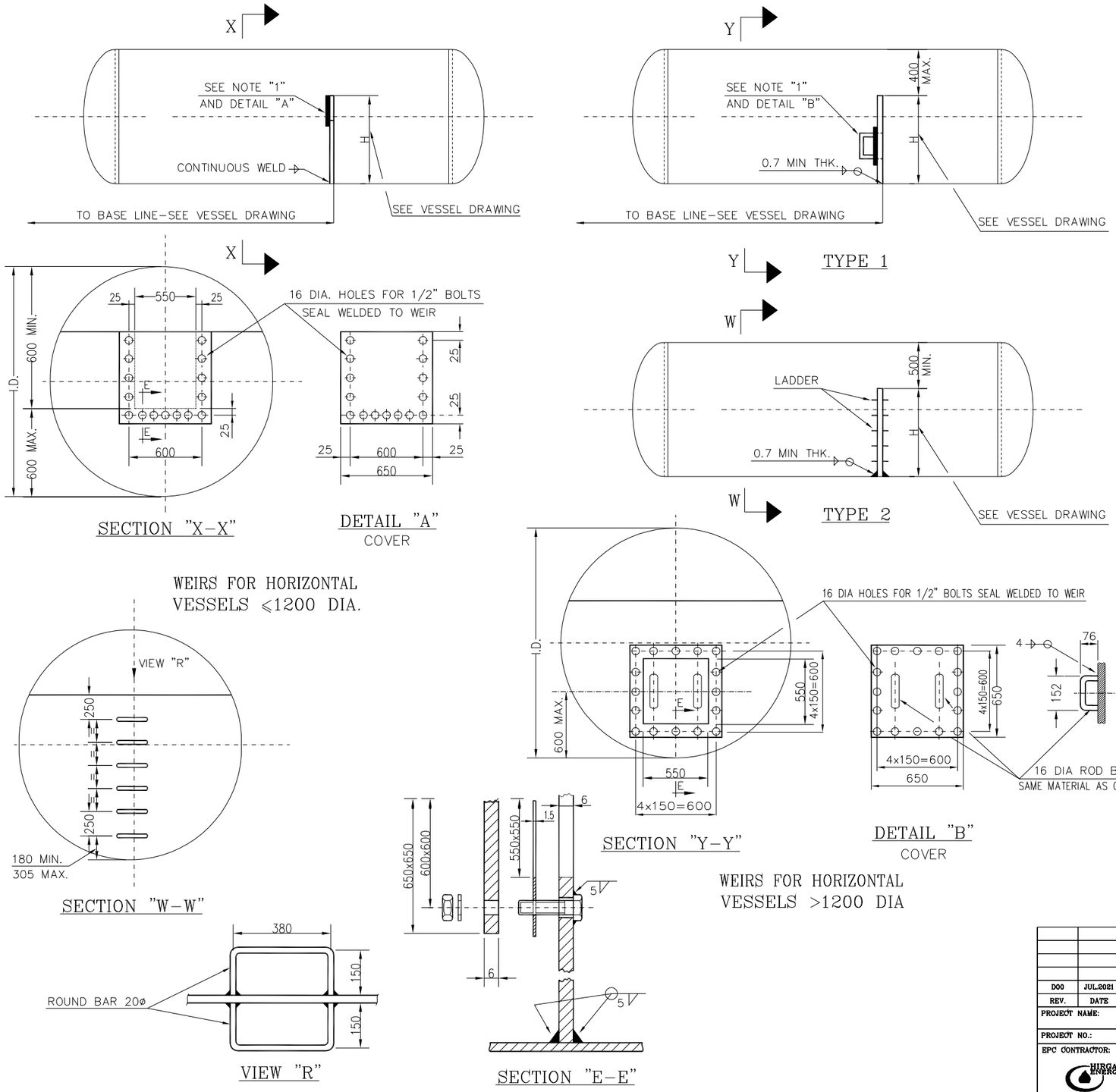

NOTES

1- THE COVER OF WEIR MANHOLE IS TO BE LOCATED ON THE SAME SIDE AS OF VESSEL MANHOLE.

2- INSERT A 1.5 mm. THICK ASBESTOS FREE GASKET BETWEEN MANHOLE COVER AND WEIR.

3- COVER AND WEIR MATERIAL SHALL BE SAME AS VESSEL MATERIAL IN THE PORTION THEY ARE TO BE INSTALLED. THICKNESS SHALL BE AT LEAST 10mm. FOR CARBON STEEL, AND 6 mm. FOR OTHER MATERIALS.

4- BOLTS AND NUTS SHALL BE AT LEAST 5% Cr. ,0.5% Mo. UNLESS ANOTHER MATERIAL IS SPECIFIED.

5- ALL DIMENSIONS ARE IN MILLIMETERS, UNLESS OTHERWISE SHOWN.

6- IN CASE OF CONFLICT BETWEEN THIS STANDARD AND VESSEL DRAWING, THE LATTER SHALL GOVERN.

7- SUITABLE HANDLES SHOULD BE CONSIDERED FOR COVER OF WEIR MANHOLE.

8- BASIC CORROSION FOR CARBON STEEL HAS BEEN ASSUMED EQUAL TO 4 mm. GREATER CORROSION INVOLVES CORRESPONDINGLY GREATER THICKNESS.

9- FOR VESSELS (≥1600 DIA.) CHECK THE NECESSITY OF REINFORCING THE WEIR CONSIDERING ON ONE SIDE THE ABSENCE OF LIQUID AND ON THE OTHER SIDE HEAD LIQUID WITH SPECIFIC GRAVITY OF≥1.

LEGEND

REFERENCE DRAWING	DRG. No.
**********	******

KEY PLAN

REV.	DESCRIPTION	BY	DATE	BY	DATE
***	**********	**.**	***.****	**.**	***.****
		CHECKED		REV. APPR.	

REV.	DATE	P.O.I.S	PREP.	CHK.	APP.	AUT.
D00	JUL.2021	IFI	M.Jaghargejad	M.Fakharian	Sh.Ghalikar	**.**

PROJECT NAME: BINAK OILFIELD DEVELOPMENT SURFACE WORK PACKAGES GENERAL

PROJECT NO.: 971020

EPC CONTRACTOR: HIRGAN ENERGY – DESIGN & INSPECTION COMPANIES

~~SEPERAD CONTRACTOR:~~ PETROIRAN DEVELOPMENT COMPANY (PEDCO)

BINAK OILFIELD DEVELOPMENT SURFACE WORK PACKAGES GENERAL

DATE	SCALE	DRAWING BY	CHECKED BY	PROJECT ENG.

NO CONSTRUCTION PERMITTED UNLESS DRAWING APPROVED

APPROVED FOR CONSTRUCTION BY: DATE:

(VENDOR TITLE BLOCK)**

DRAWING TITLE: STANDARD DETAIL DRAWING FOR PRESSURE VESSELS AND HEAT EXCHANGERS (WEIRS FOR HORIZONTAL VESSELS)

SCALE	SIZE	DRAWING NO.	SHEET NO.	REV.
As Shown	A3	BK-GNRAL-PEDCO-000-ME-DW-0001	36 OF 65	D00

BUDGET REF.	LOCATION	SIZE	CLASS	SERIAL NO.	SHEET	REVISION

TITLE: TANGENTIAL DISTRIBUTOR FOR VERTICAL VESSELS

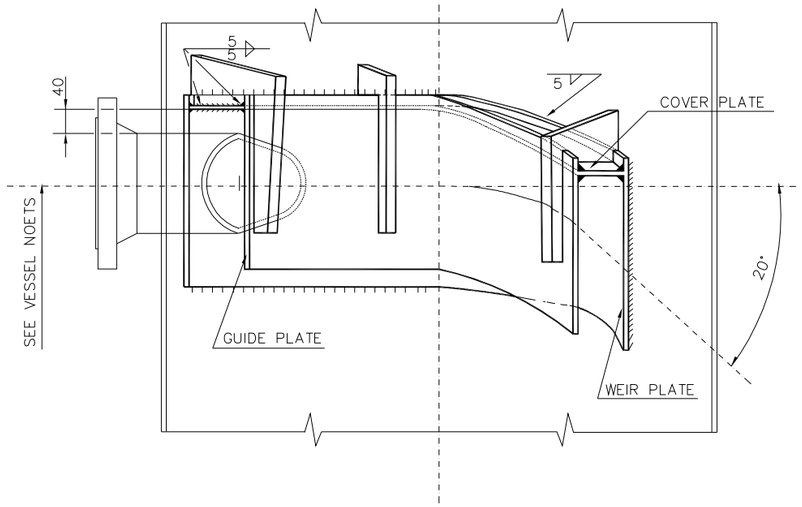

DETAIL OF TANGENTIAL DISTRIBUTOR

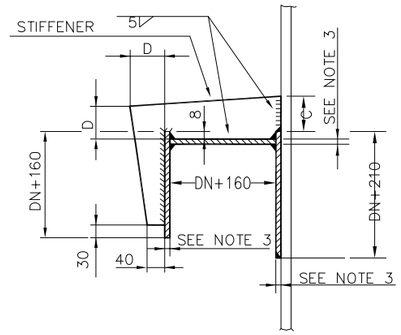

SECTION X–X

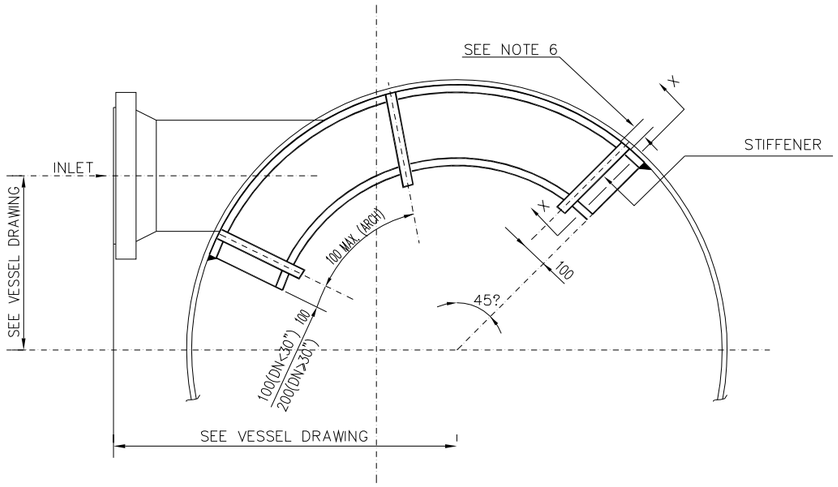

PLAN

(NPS)	DN	C (mm)	D (mm)
6	150	80	70
8	200	100	70
10	250	120	70
12	300	140	70
14	350	160	70
16	400	180	80
18	450	200	80
20	500	230	100
24	600	270	100
26	650	310	130
28	700	350	130
30	750	400	160
32	800	450	160
34	850	450	160
36	900	500	190
38	950	500	190
40	1000	550	220
42	1050	550	220
44	1100	600	250
46	1150	600	250
48	1200	650	280
50	1250	650	280
52	1300	700	280
54	1350	700	280

NOTES

1. ALL DIMENSIONS ARE IN MILLIMETERS. UNLESS OTHERWISE SHOWN.
2. MATERIAL OF WEIR AND STIFFENCE PLATE TO BE SAME AS MATERIAL OF INSIDE OF VESSEL WHERE IT IS TO BE INSTALLED.
3. THICKNESS OF GUIDE, WEIR AND TOP COVER PLATES SHALL BE AS SHOWN BELOW :

   CARBON STEEL

   A) 9mm FOR DN<750

   B) 12mm FOR DN≥750

   HIGH ALLOY STEEL

   A) 6mm FOR DN<750

   B) 9mm FOR DN≥750
4. THE WEIR PLATE SHALL BE SUITED TO THE SLOPE OF THE GUIDE PLATE.
5. JOINTS BETWEEN THE SHELL AND THE WEIR PLATE SHALL BE MADE BY CONTINUOUS FILLET WELDING.HOWEVER, 50mm OF THEM SHALL BE LEFT UNWELDED IN BOTTOM SIDE FOR USE AS A VENT.
6. THE THICKNESS OF STIFFENER SHALL BE AS FOLLOW :

   CARBON STEEL

   A) 20mm FOR DN<750

   B) 25mm FOR DN≥750

   HIGH ALLOY STEEL

   A) 15mm FOR DN<750

   B) 20mm FOR DN≥750
7. IN CASE OF CONFLICT BETWEEN THIS STANDARD AND VESSEL DRAWING. THE LATTER SHALL COVERN.
8. WELDING PROCEDURE, AND TESTING TO BE APPROVED.
9. INCASE OF THE CLADDED OR LINED VESSEL, HEAT TREATMENT AND STRESS RELIEVING SHOULD BE CONSIDERED, (FOR WELDING DURING FABRICATION AND REPAIRS IN SERVICE).

LEGEND

REFERENCE DRAWING	DRG. No.
**********	******

KEY PLAN

REV.	DESCRIPTION	BY	DATE	BY	DATE
***	**********	** **	*** ****	** **	*** ****

REV.	DATE	P.O.I.S	PREP.	CHK.	APP.	AUT.
D00	JUL.2021	IFI	M.Asgharnejad	M.Fakharian	Sh.Ghalikar	** **

CHECKED — REV. APPR.

PROJECT NAME: BINAK OILFIELD DEVELOPMENT SURFACE WORK PACKAGES GENERAL

PROJECT NO.: 971020

EPC CONTRACTOR: HIRGAN ENERGY – DESIGN & INSPECTION COMPANIES

SERVERD CONTRACTOR: PETROIRAN DEVELOPMENT COMPANY — PEDCO

BINAK OILFIELD DEVELOPMENT
SURFACE WORK PACKAGES
GENERAL

DATE	SCALE	DRAWING BY	CHECKED BY	PROJECT ENG.

(VENDOR TITLE BLOCK)**

DRAWING TITLE:
STANDARD DETAIL DRAWING FOR PRESSURE VESSELS AND HEAT EXCHANGERS
(TANGENTIAL DISTRIBUTOR FOR VERTICAL VESSELS)

NO CONSTRUCTION PERMITTED UNLESS DRAWING APPROVED

APPROVED FOR CONSTRUCTION — BY: — DATE:

SCALE	SIZE	DRAWING NO.	SHEET NO.	REV.
As Shown	A3	BK-GNRAL-PEDCO-000-ME-DW-0001	37 OF 55	D00

BUDGET REF.	LOCATION	SIZE	CLASS	SERIAL NO.	SHEET	REVISION

TITLE: SADDLE FOR STACKED EXCHANGERS

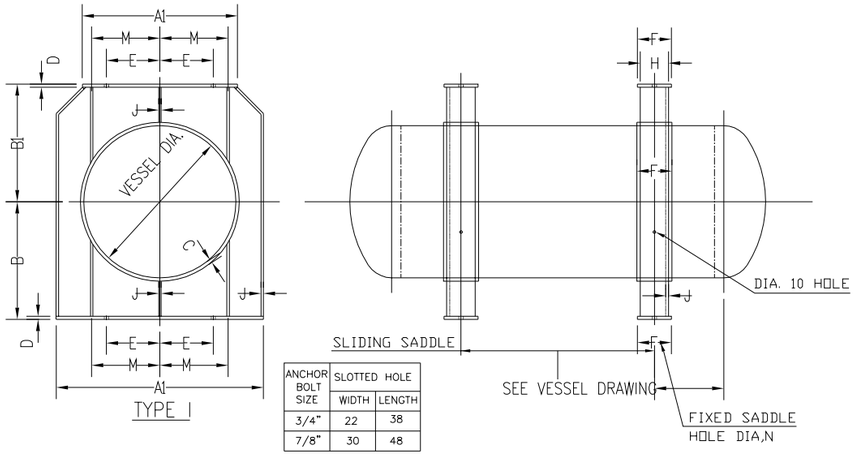

TYPE I

ANCHOR BOLT SIZE	SLOTTED HOLE	
	WIDTH	LENGTH
3/4"	22	38
7/8"	30	48

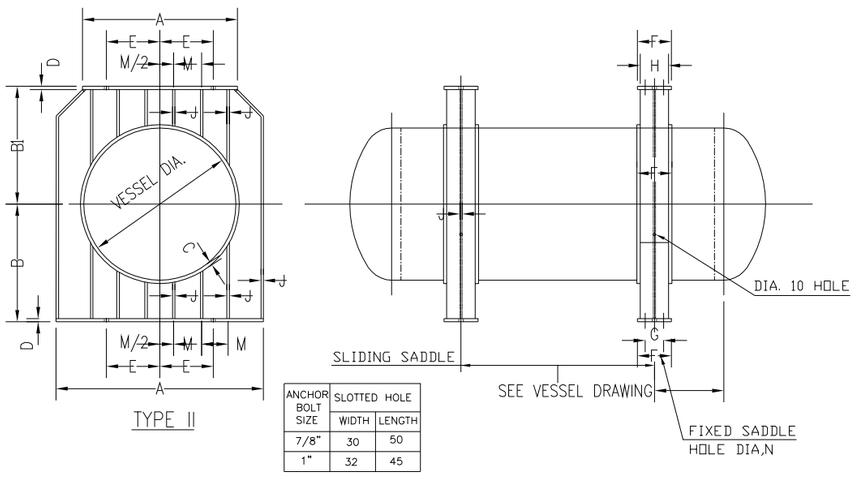

TYPE II

ANCHOR BOLT SIZE	SLOTTED HOLE	
	WIDTH	LENGTH
7/8"	30	50
1"	32	45

	VESSEL DIA.	A	A1	B	B1	C	D	E	F	G	H	J	L	M	BOLT SIZE	HOLE DIA.(N)	SIZE OF WELD	WT.FOR ONE PAIR (KG)
TYPE I	405	355	655	405	SEE EXCHANGER DRAWING	6	10	115	150	–	100	10	75	160	M20	22	6	162
	460	405	705	430		6	12	140	150	–	100	10	75	185	M20	22	6	177
	510	460	760	460		6	12	165	175	–	130	10	75	213	M20	22	6	219
	610	535	835	535		6	12	200	175	–	130	10	75	238	M20	22	6	250
	685	610	910	570		6	12	230	175	–	130	10	75	288	M20	22	6	284
	760	685	985	610		6	12	255	175	–	130	12	75	324	M20	22	6	300
	840	760	1060	650		6	12	280	175	–	130	12	75	362	M20	22	6	326
	915	840	1140	685		6	12	315	175	–	130	12	75	402	M20	22	6	353
	990	915	1215	725		6	12	365	175	–	130	12	75	439	M20	22	6	381
	1065	990	1290	760		6	12	395	175	–	130	12	75	477	M20	22	6	407
	1145	1065	1365	800		6	16	430	175	–	130	12	75	514	M24	28	6	435
TYPE II	1220	1085	1385	815		12	16	455	230	115	190	12	75	205	M24	28	6	640
	1295	1140	1440	850		12	16	480	230	115	190	12	75	220	M24	28	6	668
	1370	1240	1540	890		12	16	535	230	115	190	12	75	240	M24	28	6	726
	1450	1290	1590	930		12	16	560	230	115	190	12	75	250	M24	28	6	753
	1525	1340	1640	965		12	16	585	230	115	190	12	75	260	M24	28	6	777
	1600	1415	1715	1005		12	16	610	230	115	190	12	75	275	M24	28	6	822
	1675	1490	1790	1040		12	16	635	230	115	190	12	100	290	M24	28	6	861
	1755	1585	1885	1080		12	16	660	230	115	190	12	100	305	M24	28	6	916
	1830	1615	1915	1120		12	16	710	230	115	190	12	100	315	M24	28	8	933
	1905	1690	1990	1155		12	16	735	230	115	190	12	100	330	M24	28	8	974
	1980	1740	2040	1155		12	16	760	230	125	205	12	100	340	M24	28	8	1209
	2135	1890	2190	1270		12	20	815	230	125	205	16	125	370	M24	28	8	1332
	2285	1990	2340	1345		16	20	865	230	125	205	16	125	390	M24	28	8	1489
	2440	2140	2440	1425		16	20	940	230	125	205	16	125	420	M24	28	8	1610
	2590	2290	2590	1500		16	20	990	230	125	205	16	150	450	M24	28	8	1732

NOTES

1- IN CASE OF CONFLICT, VESSEL DRAWING GOVERNS.
2- ALL WELDS TO BE CONTINUOUS FILLETS WITH MINIMUM 2 RUNS FOR WELDS GREATER THAN 6mm.
3- FOR MATERIAL OF CONSTRUCTION SEE VESSEL DRAWING.
4- ALL DIMENSIONS ARE IN MILLIMETERS UNLESS OTHERWISE STATED.
5- FOR INTERMEDIATE VESSEL DIAMETERS USE NEXT HIGHER SIZE.

LEGEND

REFERENCE DRAWING	DRG. No.
**********	******

KEY PLAN

REV.	DATE	P.O.I.S	PREP.	CHK.	APP.	AUT.
D00	JUL.2021	IFI	M.Jaghargejad	M.Fakharian	Sh.Ghalikar	** **

REV.	DESCRIPTION	CHECKED BY	CHECKED DATE	REV. APPR. BY	REV. APPR. DATE
***	**********	** **	*** ****	** **	*** ****

PROJECT NAME: BINAK OILFIELD DEVELOPMENT SURFACE WORK PACKAGES GENERAL

PROJECT NO.: 971020

EPC CONTRACTOR: HIRGAN ENERGY – DESIGN & INSPECTION COMPANIES

~~SENIERAD CONTRACTOR:~~ PETROIRAN DEVELOPMENT COMPANY (PEDCO)

BINAK OILFIELD DEVELOPMENT SURFACE WORK PACKAGES GENERAL

DATE	SCALE	DRAWING BY	CHECKED BY	PROJECT ENG.

(VENDOR TITLE BLOCK)**

DRAWING TITLE: STANDARD DETAIL DRAWING FOR PRESSURE VESSELS AND HEAT EXCHANGERS (SADDLE FOR STACKED EXCHANGERS)

SCALE	SIZE	DRAWING NO.	SHEET NO.	REV.
As Shown	A3	BK-GNRAL-PEDCO-000-ME-DW-0001	38 OF 65	D00

NO CONSTRUCTION PERMITTED UNLESS DRAWING APPROVED

APPROVED FOR CONSTRUCTION BY: DATE:

BUDGET REF.	LOCATION	SIZE	CLASS	SERIAL NO.	SHEET	REVISION

TITLE: HANDLING LUGS

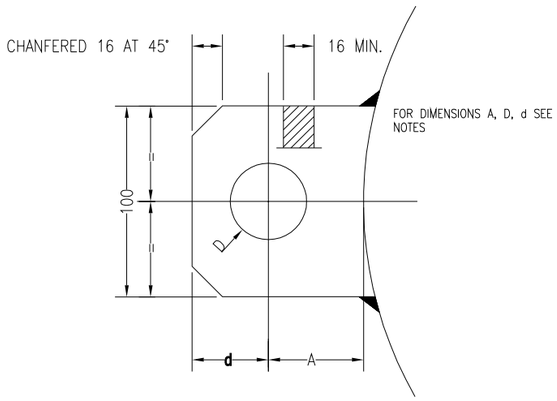

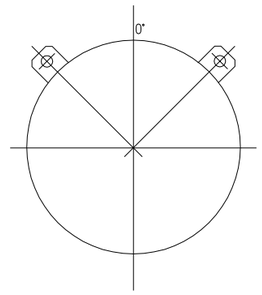

HANDLING LUGS ORIENTATION LOCATED ON CHANNEL AND SHELL COVER

NOTES

- DIAMETER "D" IS EQUAL TO 30 mm MIN.
- "D" DIMENSION IS EQUAL TO "d"
- "A" DIMENSION IS EQUAL TO INSULATION THICKNESS + 40 mm.
- ACCORDING TO WEIGHT OF PART, THE LUG THICKNESS SHALL BE 16 MM OR MORE. THICKNESS SHALL BE CALCULATED WITH LUG SHEARING STRESS OF 5 kg/cm2

MATERIAL

- LUGS SHALL BE SAME MATERIAL AS PART ON WHICH THEY ARE WELDED.

LEGEND

REFERENCE DRAWING	DRG. No.
**********	******

KEY PLAN

REV.	DATE	P.O.I.S	PREP.	CHK.	APP.	AUT.
D00	JUL.2021	IFI	M.Asgharzadeh	M.Fakharian	Sh.Ghalikar	** **

REV.	DESCRIPTION	BY	DATE	BY	DATE
		CHECKED		REV. APPR.	
***	**********	** **	**** ****	** **	**** ****

PROJECT NAME: BINAK OILFIELD DEVELOPMENT SURFACE WORK PACKAGES GENERAL

PROJECT NO.: 971020

EPC CONTRACTOR: HIRGAN ENERGY – DESIGN & INSPECTION COMPANIES

SENIORD CONTRACTOR: PEDCO — PETROIRAN DEVELOPMENT COMPANY

BINAK OILFIELD DEVELOPMENT SURFACE WORK PACKAGES GENERAL

DATE	SCALE	DRAWING BY	CHECKED BY	PROJECT ENG.

(VENDOR TITLE BLOCK)**

DRAWING TITLE: STANDARD DETAIL DRAWING FOR PRESSURE VESSELS AND HEAT EXCHANGERS (HANDLING LUGS)

NO CONSTRUCTION PERMITTED UNLESS DRAWING APPROVED

APPROVED FOR CONSTRUCTION | BY: | DATE:

SCALE	SIZE	DRAWING NO.	SHEET NO.	REV.
As Shown	A3	BK-GNRAL-PEDCO-000-ME-DW-0001	39 OF 55	D00

BUDGET REF.	LOCATION	SIZE	CLASS	SERIAL NO.	SHEET	REVISION

TITLE: LIFTING RINGS AND PULL RODS

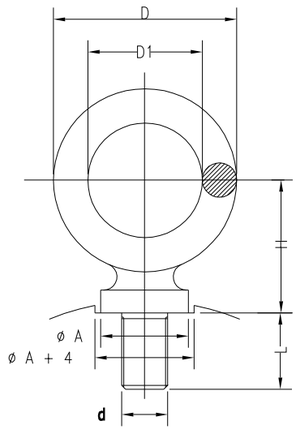

PULL RODS OR TRACTION CABLES FOR BUNDLES

TUBE DIAMETER	ROD DIAMETER (mm)	STRENGTH PER ROD (N)
5/8"	10	4500
3/4"	12	9000
7/8"	14	11250
1"	16	13500

mm d	mm L	mm D	mm D1	mm H	mm A	N	N1 45°
8	24	36	20	23	21	1500	750
10	28	42	24	28	20	2500	1250
12	40	50	30	33	22	4000	2000
14	40	56	33	40	26	6300	3150
16	50	65	37	42	28	8000	4000
18	52	72	42	48	31	10000	5000
20	55	78	46	52	32	12500	6250
22	60	84	50	58	35	16000	8000
24	65	92	54	64	38	20000	10000
27	74	100	58	68	40	25000	12500
30	80	109	61	74	45	31500	15750
33	90	120	64	80	55	40000	20000
36	100	129	75	80	55	50000	25000

NOTES

- THREAD SHALL BE ISO PITCH

MATERIAL:

- UNLESS OTHERWISE SPECIFIED, LIFTING RING SHALL BE IN SA36

LEGEND

REFERENCE DRAWING	DRG. No.
**********	******

KEY PLAN

REV.	DESCRIPTION	BY	DATE	BY	DATE
***	**********	** **	*** ****	** **	*** ****
		CHECKED		REV. APPR.	

REV.	DATE	P.O.I.S	PREP.	CHK.	APP.	AUT.
D00	JUL.2021	IFI	M.Jaghররejad	M.Fakharian	Sh.Ghalikar	** **

PROJECT NAME: BINAK OILFIELD DEVELOPMENT SURFACE WORK PACKAGES GENERAL

PROJECT NO.: 971020

EPC CONTRACTOR: HIRGAN ENERGY – DESIGN & INSPECTION COMPANIES

~~GENERAL CONTRACTOR:~~ PEDCO — PETROIRAN DEVELOPMENT COMPANY

BINAK OILFIELD DEVELOPMENT SURFACE WORK PACKAGES GENERAL

DATE	SCALE	DRAWING BY	CHECKED BY	PROJECT ENG.

(VENDOR TITLE BLOCK)**

DRAWING TITLE: STANDARD DETAIL DRAWING FOR PRESSURE VESSELS AND HEAT EXCHANGERS (LIFTING RINGS AND PULL RODS)

SCALE	SIZE	DRAWING NO.	SHEET NO.	REV.
As Shown	A3	BK-GNRAL-PEDCO-000-ME-DW-0001	40 OF 66	D00

NO CONSTRUCTION PERMITTED UNLESS DRAWING APPROVED

APPROVED FOR CONSTRUCTION BY: DATE:

BUDGET REF.	LOCATION	SIZE	CLASS	SERIAL NO.	SHEET	REVISION

TITLE: BAFFLES FOR SPLIT AND DOUBLE SPLIT FLOW

- DOUBLE SPLIT FLOW -

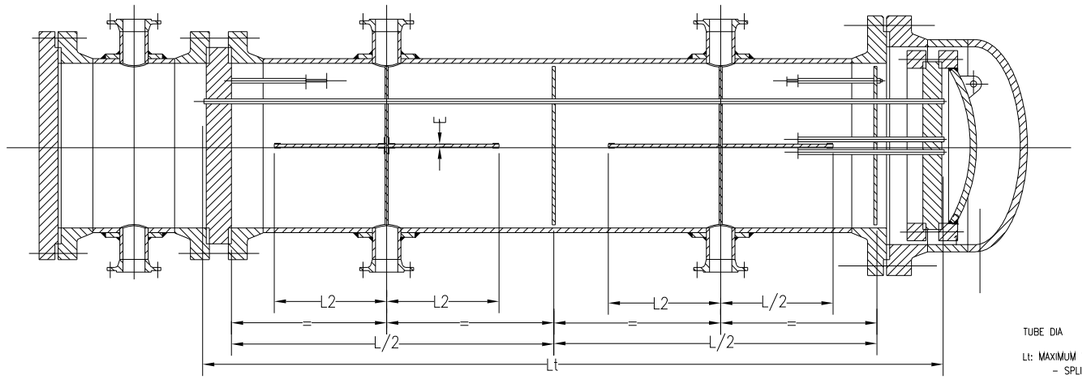

- SPLIT FLOW -

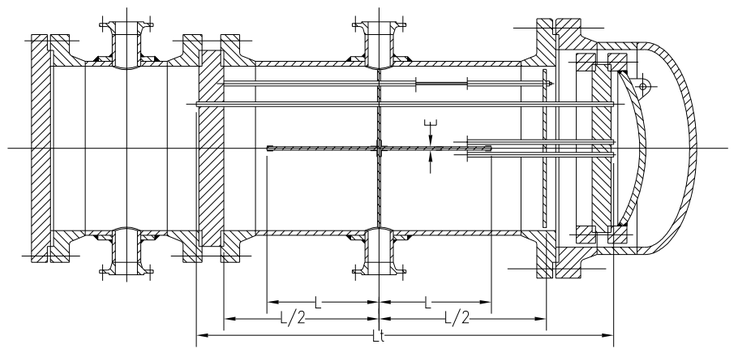

LONGITUDINAL BAFFLES LENGTH

KETTLE	- SPLIT FLOW	L1 = L/3
	- DOUBLE SPLIT FLOW	L2 = L/5
CONDENSER	- SPLIT FLOW	L1 = L/2 - [S/(Di - nd)]
	- DOUBLE SPLIT FLOW	L2 = L/4 - [S/(Di - nd)]

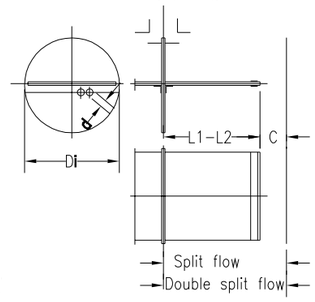

TUBE DIA	3/8"	3/4"	1"
Lt: MAXIMUM TUBE LENGTH			
- SPLIT FLOW	8'	10'	12'
- DOUBLE SPLIT FLOW	16'	20'	24'

L : EFFECTIVE TUBE LENGTH = Lt - 1"

S : NOZZLE CROSS SECTION AREA / 2

Di: CORD LENGTH ON THE 1-st TUBE LINE LEVEL

nd: NB OF TUBES IN 1-st TUBE LINE x TUBE DIA

C = S/(Di - nd)

NOTES

LEGEND

REFERENCE DRAWING	DRG. No.
**********	******

KEY PLAN

REV.	DESCRIPTION	BY	DATE	BY	DATE
***	**********	**.**	***.****	**.**	***.****
		CHECKED		REV. APPR.	

REV.	DATE	P.O.I.S	PREP.	CHK.	APP.	AUT.
D00	JUL.2021	IFI	M.Jaghargejad	M.Fakharian	Sh.Ghalikar	**.**

PROJECT NAME: BINAK OILFIELD DEVELOPMENT SURFACE WORK PACKAGES GENERAL

PROJECT NO.: 971020

EPC CONTRACTOR: HIRGAN ENERGY - DESIGN & INSPECTION COMPANIES

~~SENIERD CONTRACTOR:~~ PEDCO — PETROIRAN DEVELOPMENT COMPANY

BINAK OILFIELD DEVELOPMENT SURFACE WORK PACKAGES GENERAL

DATE	SCALE	DRAWING BY	CHECKED BY	PROJECT ENG.

(VENDOR TITLE BLOCK)**

DRAWING TITLE: STANDARD DETAIL DRAWING FOR PRESSURE VESSELS AND HEAT EXCHANGERS (BAFFLES FOR SPLIT AND DOUBLE SPLIT FLOW)

NO CONSTRUCTION PERMITTED UNLESS DRAWING APPROVED

APPROVED FOR CONSTRUCTION | BY: | DATE:

SCALE	SIZE	DRAWING NO.	SHEET NO.	REV.
As Shown	A3	BK-GNRAL-PEDCO-000-ME-DW-0001	41 OF 55	D00

BUDGET REF.	LOCATION	SIZE	CLASS	SERIAL NO.	SHEET	REVISION

TITLE: TUBE HOLE DRILLING FOR BAFFLES AND SUPPORT PLATES

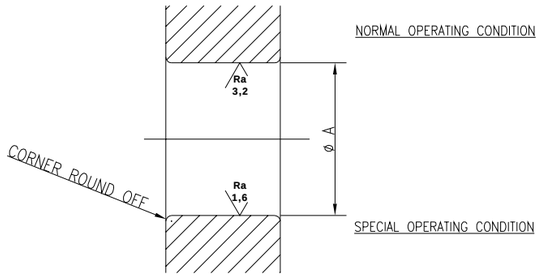

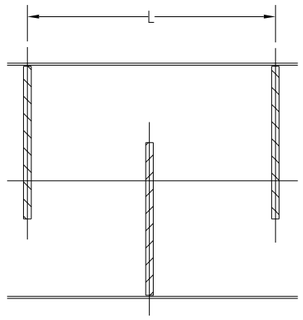

TUBES O.D.	MAXIMUM UNSUPPORTED LENGTH OF TUBE "L"							
	<= 36"		> 36"		DRILLING FOR SPECIAL OPERATING CONDITIONS			
					<= 24"		24" < L < 36"	
	mm ø A	mm TOLERANCE	mm ø A	mm TOLERANCE	mm ø A	mm TOLERANCE	mm ø A	mm TOLERANCE
1/4"	7,15	+0,05 −0,10	6,75	+0,05 −0,10	6,883	+0,05 −0,10	6,655	+0,05 −0,10
3/8"	10,32	"	9,93	"	10,058	"	9,830	"
1/2"	13,50	"	13,10	"	13,233	"	13,005	"
5/8"	16,67	"	16,275	"	16,408	"	16,180	"
3/4"	19,85	"	19,45	"	19,583	"	19,355	"
7/8"	23,02	"	22,63	"	22,758	"	22,530	"
1"	26,20	"	25,80	"	25,933	"	25,705	"
1"1/4	32,55	"	32,15	"	32,282	"	32,054	"
1"1/2	38,90	"	38,50	"	38,633	"	38,404	"
2"	51,60	"	51,20	"	51,332	"	51,104	"

NOTES

LEGEND

REFERENCE DRAWING	DRG. No.
**********	******

KEY PLAN

REV.	DESCRIPTION	BY	DATE	BY	DATE
		CHECKED		REV. APPR.	
***	**********	** **	*** ****	** **	*** ****

REV.	DATE	P.O.I.S	PREP.	CHK.	APP.	AUT.
D00	JUL.2021	IFI	M.Jaghargrajad	M.Fakharian	Sh.Ghalikar	** **

PROJECT NAME: BINAK OILFIELD DEVELOPMENT SURFACE WORK PACKAGES GENERAL

PROJECT NO.: 971020

EPC CONTRACTOR: HIRGAN ENERGY – DESIGN & INSPECTION COMPANIES

~~GENERAL CONTRACTOR:~~ PEDCO — PETROIRAN DEVELOPMENT COMPANY

BINAK OILFIELD DEVELOPMENT
SURFACE WORK PACKAGES
GENERAL

DATE	SCALE	DRAWING BY	CHECKED BY	PROJECT ENG.

(VENDOR TITLE BLOCK)**

DRAWING TITLE:
STANDARD DETAIL DRAWING FOR PRESSURE VESSELS AND HEAT EXCHANGERS
(TUBE HOLE DRILLING FOR BAFFLES AND SUPPORT PLATES)

NO CONSTRUCTION PERMITTED UNLESS DRAWING APPROVED

APPROVED FOR CONSTRUCTION | BY: | DATE:

SCALE	SIZE	DRAWING NO.	SHEET NO.	REV.
As Shown	A3	BK-GNRAL-PEDCO-000-ME-DW-0001	42 OF 56	D00

BUDGET REF.	LOCATION	SIZE	CLASS	SERIAL NO.	SHEET	REVISION

TITLE: HANDLING LUG AND WELDING DETAIL OF FLOATING HEAD

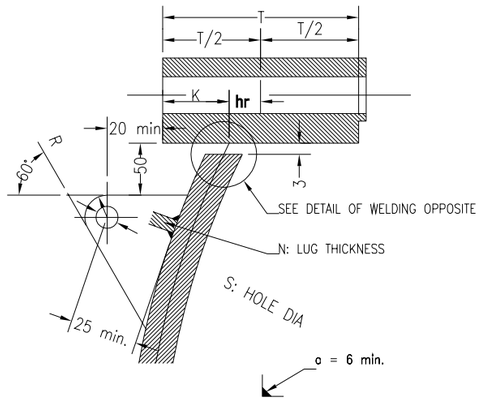

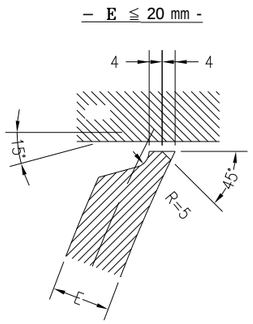

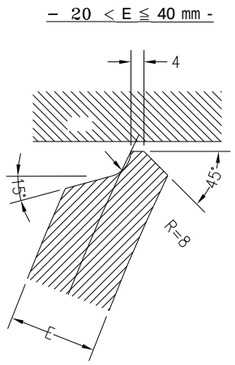

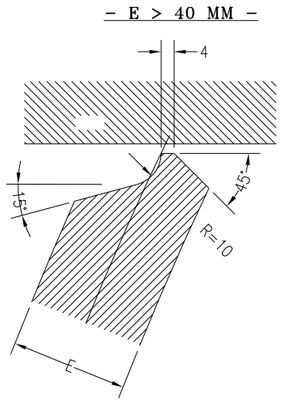

NOMINAL DIA	N	S	R
13"1/4	10	16	30
15"			
15"1/4			
17"			
17"1/4			
19"		20	32
19"1/4			
21"	12		
23"			
23"1/4			
25"	16	22	35
27"			
29"		25	
31"			
33"		28	38
35"			
37"	18		
39"		32	
42"			
45"		35	42
48"			
51"		38	
54"	20		
57"			
60"			

NOTES

- ALL DIMENSIONS ARE IN MILLIMETERS
- FOR "PULL THROUGH" TYPE EXCHANGER TAKE NOMINAL DIAMETER MINUS 4"
- ALL MODIFICATIONS TO THIS STANDARD (HANDLING LUGS AND WELDING DETAIL) SHALL BE SUBJECT TO CONTRACTOR APPROVAL

LEGEND

REFERENCE DRAWING	DRG. No.
**********	******

KEY PLAN

REV.	DESCRIPTION	BY	DATE	BY	DATE
		CHECKED		REV. APPR.	
***	**********	** **	*** ****	** **	*** ****

REV.	DATE	P.O.I.S	PREP.	CHK.	APP.	AUT.
D00	JUL.2021	IFI	M.Jaghargrajad	M.Fakharian	Sh.Ghalikar	** **

PROJECT NAME: BINAK OILFIELD DEVELOPMENT SURFACE WORK PACKAGES GENERAL

PROJECT NO.: 971020

EPC CONTRACTOR: HIRGAN ENERGY – DESIGN & INSPECTION COMPANIES

GENERAL CONTRACTOR: PETROIRAN DEVELOPMENT COMPANY (PEDCO)

BINAK OILFIELD DEVELOPMENT
SURFACE WORK PACKAGES
GENERAL

DATE	SCALE	DRAWING BY	CHECKED BY	PROJECT ENG.

(VENDOR TITLE BLOCK)**

DRAWING TITLE:
STANDARD DETAIL DRAWING FOR PRESSURE VESSELS AND HEAT EXCHANGERS
(HANDLING LUG AND WELDING DETAIL FOR FLOATING HEAD)

NO CONSTRUCTION PERMITTED UNLESS DRAWING APPROVED

APPROVED FOR CONSTRUCTION BY: DATE:

SCALE	SIZE	DRAWING NO.	SHEET NO.	REV.
As Shown	A3	BK-GNRAL-PEDCO-000-ME-DW-0001	43 OF 56	D00

BUDGET REF.	LOCATION	SIZE	CLASS	SERIAL NO.	SHEET	REVISION

TITLE: JACK SCREW AND CENTERING PIN

POSITION OF JACK SCREWS

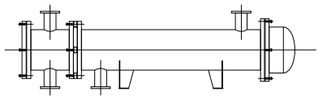

4 JACK SCREWS

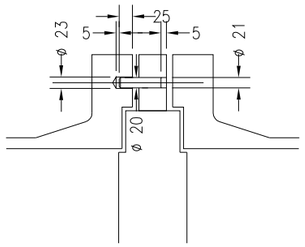

CENTERING PIN

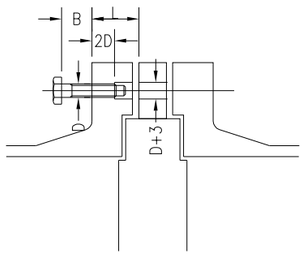

JACK SCREW

MATERIAL: 11-13% Cr

D	A	B	16	18	20	22	24	27	30	33	36	39	42	45	48
ø 16	20	35	x	x	x	x	x								
ø 20	30	45						x	x	x	x				
ø 24	40	60										x	x	x	x

ONLY USE IF REQUIRED.

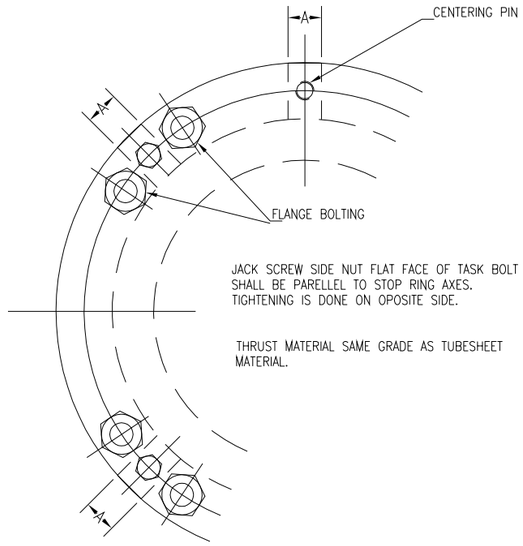

JACK SCREW SIDE NUT FLAT FACE OF TASK BOLT SHALL BE PARELLEL TO STOP RING AXES. TIGHTENING IS DONE ON OPOSITE SIDE.

THRUST MATERIAL SAME GRADE AS TUBESHEET MATERIAL.

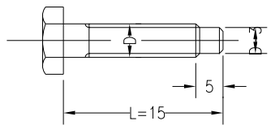

SCRETO BE GREASED (MOLYCOTE) BEFORE ASSEMBLING.

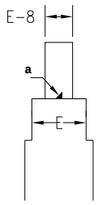

THIN TUBESHEET E UP TO 30 mm

a = 6 MIN.

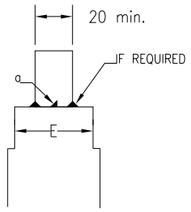

THICK TUBE SHEET E > 30 mm

NOTES

LEGEND

REFERENCE DRAWING	DRG. No.
**********	******

KEY PLAN

REV.	DESCRIPTION	BY	DATE	BY	DATE
		CHECKED		REV. APPR.	
***	**********	** **	*** ****	** **	*** ****

REV.	DATE	P.O.I.S	PREP.	CHK.	APP.	AUT.
D00	JUL.2021	IFI	M.Asgharnejad	M.Fakharian	Sh.Shalikar	** **

PROJECT NAME: BINAK OILFIELD DEVELOPMENT SURFACE WORK PACKAGES GENERAL

PROJECT NO.: 971020

EPC CONTRACTOR: HIRGAN ENERGY – DESIGN & INSPECTION COMPANIES

~~SEUERAD CONTRACTOR:~~ PETROIRAN DEVELOPMENT COMPANY PEDCO

BINAK OILFIELD DEVELOPMENT SURFACE WORK PACKAGES GENERAL

DATE	SCALE	DRAWING BY	CHECKED BY	PROJECT ENG.

NO CONSTRUCTION PERMITTED UNLESS DRAWING APPROVED

APPROVED FOR CONSTRUCTION BY: DATE:

(VENDOR TITLE BLOCK)**

DRAWING TITLE: STANDARD DETAIL DRAWING FOR PRESSURE VESSELS AND HEAT EXCHANGERS (JACK SCREW AND CENTERING PIN)

SCALE	SIZE	DRAWING NO.	SHEET NO.	REV.
As Shown	A3	BK-GNRAL-PEDCO-000-ME-DW-0001	44 OF 66	D00

BUDGET REF.	LOCATION	SIZE	CLASS	SERIAL NO.	SHEET	REVISION

TITLE: GASKET SEAM ORIENTATION

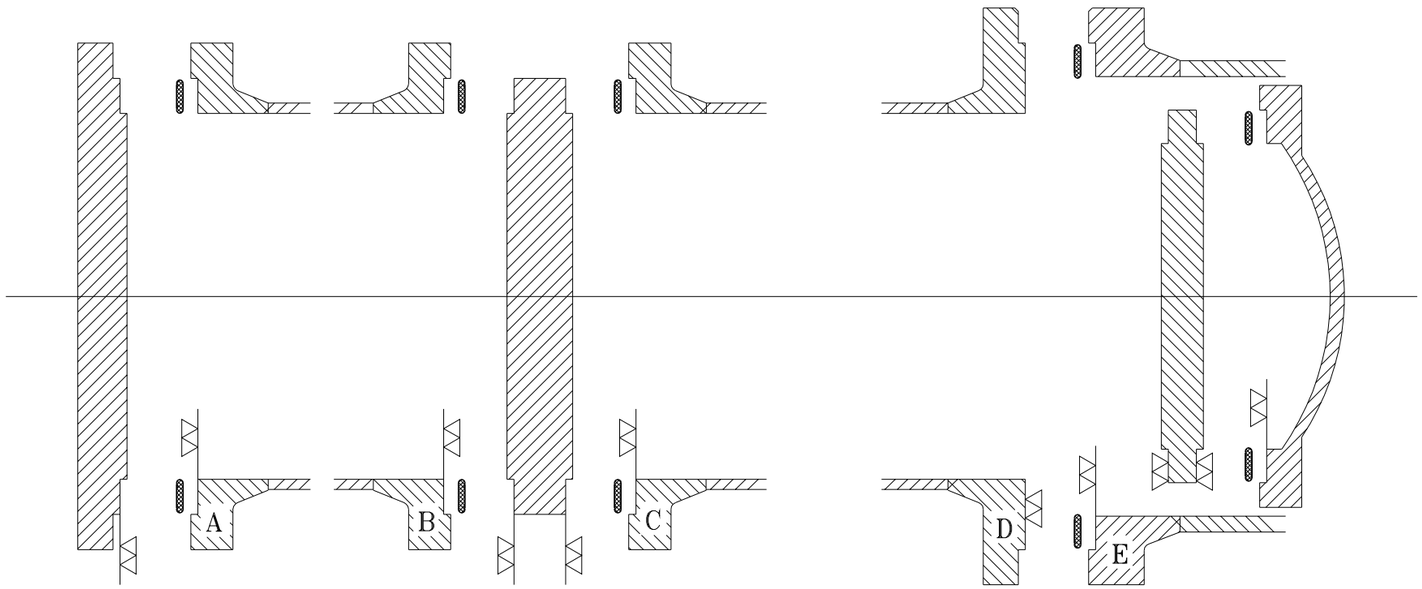

NOTE:

ALL GASKET FACES SHALL BE SMOOTH AND NOT SERRATED.

= Ra 1.6

NOTES

LEGEND

REFERENCE DRAWING	DRG. No.
**********	******

KEY PLAN

REV.	DATE	P.O.I.S	PREP.	CHK.	APP.	AUT.
D00	JUL.2021	IFI	M.Asgharzadeh	M.Fakharian	Sh.Ghalikar	** **

REV.	DESCRIPTION	BY	DATE	BY	DATE
		CHECKED		REV. APPR.	
***	**********	** **	*** ****	** **	*** ****

PROJECT NAME: BINAK OILFIELD DEVELOPMENT SURFACE WORK PACKAGES GENERAL

PROJECT NO.: 971020

EPC CONTRACTOR: HIRGAN ENERGY – DESIGN & INSPECTION COMPANIES

SENIORD CONTRACTOR: PEDCO — PETROIRAN DEVELOPMENT COMPANY

BINAK OILFIELD DEVELOPMENT SURFACE WORK PACKAGES GENERAL

DATE	SCALE	DRAWING BY	CHECKED BY	PROJECT ENG.

(VENDOR TITLE BLOCK)**

DRAWING TITLE: STANDARD DETAIL DRAWING FOR PRESSURE VESSELS AND HEAT EXCHANGERS (GASKET SEAM ORIENTATION)

NO CONSTRUCTION PERMITTED UNLESS DRAWING APPROVED

APPROVED FOR CONSTRUCTION | BY: | DATE:

SCALE	SIZE	DRAWING NO.	SHEET NO.	REV.	BUDGET REF.	LOCATION	SIZE	CLASS	SERIAL NO.	SHEET	REVISION
As Shown	A3	BK-GNRAL-PEDCO-000-ME-DW-0001	45 OF 56	D00							

TITLE: TUBE HOLE GROOVING

1 – TUBE SHEET AND TUBES ARE SAME GRADE OF MATERIAL

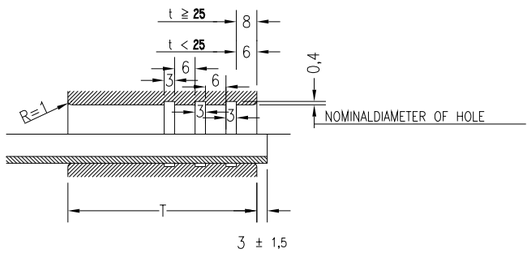

2 – CLAD TUBE SHEET AND MONOMETALLIC TUBES

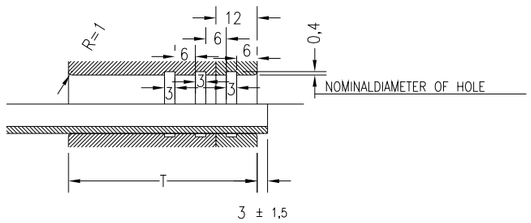

3 – CLAD TUBE SHEET AND BIMETALLIC TUBES

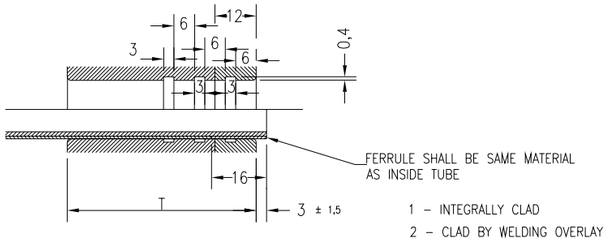

1 – INTEGRALLY CLAD
2 – CLAD BY WELDING OVERLAY
3 – CLAD BY STICKING

1 – INTEGRALLY CLAD
2 – CLAD BY WELDING OVERLAY
3 – CLAD BY STICKING

TEMA CLASS	"R" & "B"	"C"
IN ALL CASES NUMBER OF GROOVES IN BASE MATERIAL SHALL BE EQUAL TO	2 MIN.	IF DESIGN PRESSURE OVER 2,1 MPa AND/OR TEMPERATURE OVER 177°C AND FOR TUBES ø P 5/8" OD 2 MIN.

NOTE: TUBES SHALL BE FLASH WITH THE TOP TUBE SHEET TO FACILITATE DRAINING.

NOTES

LEGEND

REFERENCE DRAWING	DRG. No.
**********	******

KEY PLAN

REV.	DATE	P.O.I.S	PREP.	CHK.	APP.	AUT.
D00	JUL.2021	IFI	M.Angharvojad	M.Fakharian	Sh.Ghalikar	** **

REV.	DESCRIPTION	BY	DATE	BY	DATE
		CHECKED		REV. APPR.	
***	**********	** **	*** ****	** **	*** ****

PROJECT NAME: BINAK OILFIELD DEVELOPMENT SURFACE WORK PACKAGES GENERAL

PROJECT NO.: 971020

EPC CONTRACTOR: HIRGAN ENERGY – DESIGN & INSPECTION COMPANIES

~~DESIGNER CONTRACTOR:~~ PETROIRAN DEVELOPMENT COMPANY — PEDCO

BINAK OILFIELD DEVELOPMENT SURFACE WORK PACKAGES GENERAL

DATE	SCALE	DRAWING BY	CHECKED BY	PROJECT ENG.

(VENDOR TITLE BLOCK)**

DRAWING TITLE: STANDARD DETAIL DRAWING FOR PRESSURE VESSELS AND HEAT EXCHANGERS (TUBE HOLE GROOVING)

NO CONSTRUCTION PERMITTED UNLESS DRAWING APPROVED

APPROVED FOR CONSTRUCTION BY: DATE:

SCALE	SIZE	DRAWING NO.	SHEET NO.	REV.
As Shown	A3	BK-GNRAL-PEDCO-000-ME-DW-0001	46 OF 66	D00

BUDGET REF.	LOCATION	SIZE	CLASS	SERIAL NO.	SHEET	REVISION

TITLE: TUBE WELDING ON TUBE SHEET

TYPE 1

W1 = t1
B1 = t1

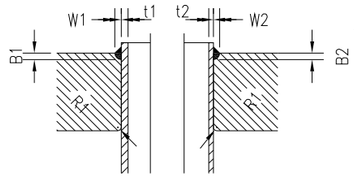

TYPE 2

THIS ARRANGEMENT IS PREFERED WHEN TUBE MAY BE DAMAGED DUE TO ITS THIN WALL THICKNESS.

W2 = 1,5t2
B2 = t2

NOTES:

1 – DIMENSION OF TUBE EXTENDING BEYOND TUBESHEET SHOULD BE RESTRICTED SO AS TO FACILITATE MANUAL WELDING TWO PASS WELDING MIN

2 – IF TUBE EXTENDS BEYOND THE WELD,IT MUST BE REMOVED AFTER WELDING OPERATION

3 – THE TUBE ENDS AND EXTRA SIZE OF WELD COULD BE FLUSH WITH THE FACE TUBESHEET IN THIS CASE THE FOLLOWING CONDITIONS MUST BE VERIFIED B1=t1 AND B2=t2

4 – VERTICAL EXCHANGERS TO FACILITATE DRAINAGE (SAME CONDITIONS NOTE 3)

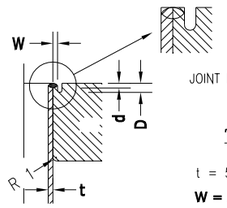

JOINT PREPARATION FOR WELDING.

TYPE 4

t = 5 mm OR LESS.

W = t **d = t** **D = 2t**

– THIS ARRANGEMENT REDUCES DISTORTION OF TUBESHEET DUE TO WELDING BUT IT SHALL IN NO CASE BE SUBJECT TO SPLITTING

– THE DRAINAGE IS NOT POSSIBLE WITH THIS ARRANGEMENT, THEREFORE, IT IS NOT PERMISSIBLE FOR VERTICAL EXCHANGERS CONSTRUCTION

– THIS ARRANGEMENT IS PROHIBITED IN CASE OF CORROSIVE FLUID IN CHANNEL AND TUBE SIDE

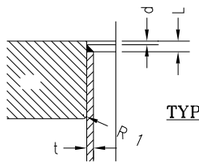

TYPE 3

t = 3 mm MIN. FOR MANUAL ARC WELDING

F = 0,7 t MIN.

d = 1 MM

L = t

NOTE: EACH TUBE SHALL BE WELDED INDIVIDUALLY, WITHOUT STOPPING.

NOTES

LEGEND

REFERENCE DRAWING	DRG. No.
**********	******

KEY PLAN

REV.	DESCRIPTION	BY	DATE	BY	DATE
***	**********	** **	*** ****	** **	*** ****

REV.	DATE	P.O.I.S	PREP.	CHK.	APP.	AUT.
D00	JUL.2021	IFI	M.Asgharnejad	M.Fakharian	Sh.Ghalikar	** **

CHECKED	REV. APPR.

PROJECT NAME: BINAK OILFIELD DEVELOPMENT SURFACE WORK PACKAGES GENERAL

PROJECT NO.: 971020

EPC CONTRACTOR: HIRGAN ENERGY – DESIGN & INSPECTION COMPANIES

SERVERD CONTRACTOR: PETROIRAN DEVELOPMENT COMPANY (PEDCO)

BINAK OILFIELD DEVELOPMENT SURFACE WORK PACKAGES GENERAL

DATE	SCALE	DRAWING BY	CHECKED BY	PROJECT ENG.

(VENDOR TITLE BLOCK)**

DRAWING TITLE: STANDARD DETAIL DRAWING FOR PRESSURE VESSELS AND HEAT EXCHANGERS (TUBE WELDING ON TUBE SHEET)

NO CONSTRUCTION PERMITTED UNLESS DRAWING APPROVED

APPROVED FOR CONSTRUCTION BY: DATE:

SCALE	SIZE	DRAWING NO.	SHEET NO.	REV.
As Shown	A3	BK-GNRAL-PEDCO-000-ME-DW-0001	47 OF 56	D00

BUDGET REF.	LOCATION	SIZE	CLASS	SERIAL NO.	SHEET	REVISION

TITLE: PASS PARTITION THICKNESS AND DETAIL OF WELDING

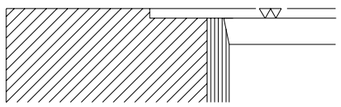

SECTION Y-Y

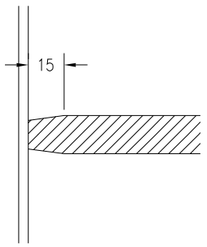

SECTION X-X

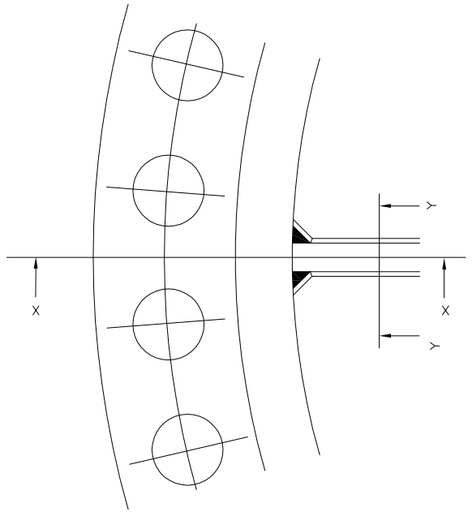

MINIMUM THICKNESS INCLUDING CORROSION ALLOWANCE

NOMINAL DIAMETER	CARBON STEEL (mm)	ALLOY MATERIAL (mm)
UP TO 24"	10	6
24" AND OVER	13	10

NOTE: FOR LINED OR CLAD EXCHANGERS, PASS PARTITION SHALL BE OF THE SAME GRADE AS ALLOY.

NOTES

- DIMENSIONS ARE IN MILLIMETERS AND WEIGHTS ARE GIVEN FOR A JOINT EFFICIENCY 0.85.
- REINFORCEMENT PADS SHALL HAVE SAME THICKNESS AS SHELL.
- HOLES FOR TEST AND VENT, DRILLED IN REINFORCEMENT PADS SHALL BE EQUIDISTANT. VENT HOLES 3 mm DIA, SHALL BE OBTURATED BY WELDING.
- HOLE 1/4" SHALL ALWAYS BE LOCATED IN LOWER PART OF REINFORCEMENT PAD. AFTER TESTING, THE HOLE SHALL BE FITTED WITH THREADED TUBE EXTENDING BEYOND INSULATION...
- REINFORCEMENT PADS SHALL BE OF THE SAME MATERIAL AS SHELL.

LEGEND

REFERENCE DRAWING	DRG. No.
**********	******

KEY PLAN

REV.	DATE	P.O.I.S	PREP.	CHK.	APP.	AUT.
D00	JUL.2021	IFI	M.Asgharvajed	M.Fakharian	Sh.Ghalikar	**.**

REV.	DESCRIPTION	CHECKED BY	CHECKED DATE	REV. APPR. BY	REV. APPR. DATE
***	**********	**.**	***.****	**.**	***.****

PROJECT NAME: BINAK OILFIELD DEVELOPMENT SURFACE WORK PACKAGES GENERAL

PROJECT NO.: 971020

EPC CONTRACTOR: HIRGAN ENERGY – DESIGN & INSPECTION COMPANIES

SEUERD CONTRACTOR: PETROIRAN DEVELOPMENT COMPANY (PEDCO)

BINAK OILFIELD DEVELOPMENT SURFACE WORK PACKAGES GENERAL

DATE	SCALE	DRAWING BY	CHECKED BY	PROJECT ENG.

(VENDOR TITLE BLOCK)**

DRAWING TITLE: STANDARD DETAIL DRAWING FOR PRESSURE VESSELS AND HEAT EXCHANGERS (PASS PARTITION THICKNESS AND DETAIL OF WELDING)

SCALE	SIZE	DRAWING NO.	SHEET NO.	REV.
As Shown	A3	BK-GNRAL-PEDCO-000-ME-DW-0001	48 OF 55	D00

NO CONSTRUCTION PERMITTED UNLESS DRAWING APPROVED

APPROVED FOR CONSTRUCTION | BY: | DATE:

BUDGET REF.	LOCATION	SIZE	CLASS	SERIAL NO.	SHEET	REVISION

TITLE: NOZZLES REINFORCEMENT

THICKNESS LESS OR EQUAL TO 16 mm

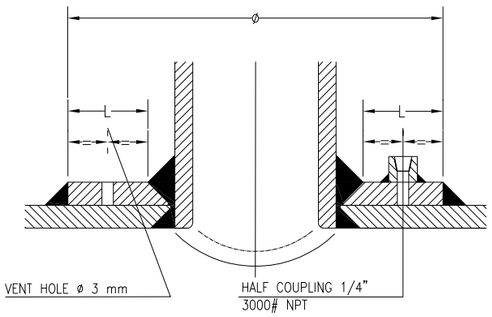

THICKNESS OVER 16 mm

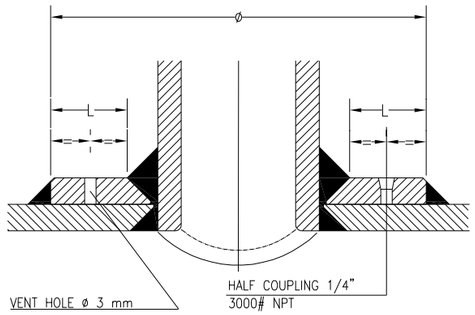

		NOMINAL DIAMETER IN INCHES																					
		3		4		6		8		10		12		14		16		18		20		24	
		L	ø	L	ø	L	ø	L	ø	L	ø	L	ø	L	ø	L	ø	L	ø	L	ø	L	ø
JOINT EFFICIENCY	0,5	60	210	60	235	60	290	60	340	60	395	60	445	60	480	60	530	60	580	60	630	70	750
	0,7	60	210	70	255	70	310	70	360	70	415	70	465	70	500	90	590	100	660	100	710	130	870
	0,8	60	210	70	255	70	310	70	360	90	455	100	525	110	580	130	670	140	740	160	830	190	990
	0,85	60	210	70	255	70	310	80	380	100	475	120	565	130	620	140	690	160	780	180	870	220	1050
	0,9	60	210	70	255	70	310	90	400	120	515	140	605	150	660	160	730	190	840	210	930	250	1110
	1	60	210	70	255	70	310	100	420	130	535	160	645	170	700	180	770	210	880	230	970	280	1170
NB OF VENTS		1		1		2		2		3		3		3		3		3		3		3	
WEIGHT PER mm		0,222		0,320		0,414		0,592		0,924		1,316		1,557		1,884		2,433		3,056		4,501	

NOTES

LEGEND

REFERENCE DRAWING	DRG. No.
**********	******

KEY PLAN

REV.	DESCRIPTION	CHECKED BY	CHECKED DATE	REV. APPR. BY	REV. APPR. DATE
***	**********	**.**	***.****	**.**	***.****

REV.	DATE	P.O.I.S	PREP.	CHK.	APP.	AUT.
D00	JUL.2021	IFI	M.Asgharrezjad	M.Fakharian	Sh.Ghalikar	**.**

PROJECT NAME: BINAK OILFIELD DEVELOPMENT SURFACE WORK PACKAGES GENERAL

PROJECT NO.: 971020

EPC CONTRACTOR: HIRGAN ENERGY – DESIGN & INSPECTION COMPANIES

GENERAL CONTRACTOR: PEDCO — PETROIRAN DEVELOPMENT COMPANY

BINAK OILFIELD DEVELOPMENT
SURFACE WORK PACKAGES
GENERAL

DATE	SCALE	DRAWING BY	CHECKED BY	PROJECT ENG.

(VENDOR TITLE BLOCK)**

DRAWING TITLE:
STANDARD DETAIL DRAWING FOR PRESSURE VESSELS AND HEAT EXCHANGERS
(NOZZLES REINFORCEMENT)

SCALE	SIZE	DRAWING NO.	SHEET NO.	REV.
As Shown	A3	BK-GNRAL-PEDCO-000-ME-DW-0001	49 OF 56	D00

NO CONSTRUCTION PERMITTED UNLESS DRAWING APPROVED

APPROVED FOR CONSTRUCTION BY: DATE:

BUDGET REF.	LOCATION	SIZE	CLASS	SERIAL NO.	SHEET	REVISION

TITLE: COUPLINGS FOR TAPPED CONNECTIONS

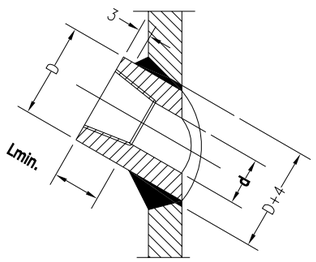

FROM 3" TO 6" INCLUDED, INCLINATION 30°

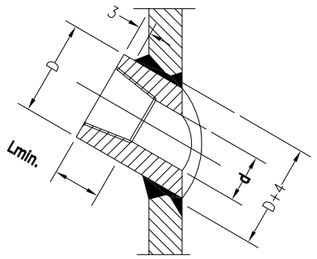

8" AND OVER, INCLINATION 30°

A (SEE NOTE)

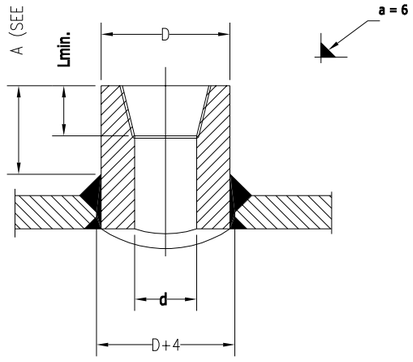

NOMINAL DIAMETER	D (mm)		L (mm)	d (mm)
	3000#	6000#		
1/2"	29	38	17	16,6
3/4"	35	45	18	21,8
1"	45	57	21	27,5
1-1/2"	64	76	23	42,1
2"	76	92	24	54,1

NOTES

LEGEND

REFERENCE DRAWING	DRG. No.
**********	******

KEY PLAN

REV.	DESCRIPTION	BY	DATE	BY	DATE
***	**********	** **	*** ****	** **	*** ****
		CHECKED		REV. APPR.	

REV.	DATE	P.O.I.S	PREP.	CHK.	APP.	AUT.
D00	JUL.2021	IFI	M.Asgharnejad	M.Fakharian	Sh.Ghalikar	** **

PROJECT NAME: BINAK OILFIELD DEVELOPMENT SURFACE WORK PACKAGES GENERAL

PROJECT NO.: 971020

EPC CONTRACTOR: HIRGAN ENERGY – DESIGN & INSPECTION COMPANIES

SEVERAL CONTRACTOR: PETROIRAN DEVELOPMENT COMPANY (PEDCO)

BINAK OILFIELD DEVELOPMENT SURFACE WORK PACKAGES GENERAL

DATE	SCALE	DRAWING BY	CHECKED BY	PROJECT ENG.

(VENDOR TITLE BLOCK)**

DRAWING TITLE: STANDARD DETAIL DRAWING FOR PRESSURE VESSELS AND HEAT EXCHANGERS (COUPLINGS FOR TAPPED CONNECTIONS)

NO CONSTRUCTION PERMITTED UNLESS DRAWING APPROVED

APPROVED FOR CONSTRUCTION | BY: | DATE:

SCALE	SIZE	DRAWING NO.	SHEET NO.	REV.	BUDGET REF.	LOCATION	SIZE	CLASS	SERIAL NO.	SHEET	REVISION
As Shown	A3	BK-GNRAL-PEDCO-000-ME-DW-0001	60 OF 65	D00							

TITLE: PLUGS FOR MIXED COUPLINGS

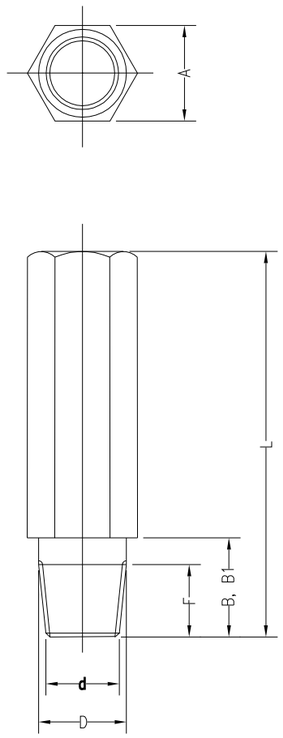

	NOMINAL DIAMETER IN INCHES				
	1/2"	3/4"	1"	1"1/2	2"
A (mm)	27	32	41	54	67
B (mm)	30	30	35	36	37
B1 (mm)	37	39	43	46	50
D (mm)	21,4	26,7	33,4	48,3	60,4
d (mm)	20,2	25,5	32	46,8	58,9
F (mm)	19,8	20,2	25	26,1	26,9
L (mm)	120	120	120	120	120

NOTES

LEGEND

REFERENCE DRAWING	DRG. No.
**********	******

KEY PLAN

REV.	DATE	P.O.I.S	PREP.	CHK.	APP.	AUT.
D00	JUL.2021	IFI	M.Asgharnejad	M.Fakharian	Sh.Ghalikar	** **

REV.	DESCRIPTION	BY	DATE	BY	DATE
***	**********	** **	*** ****	** **	*** ****
		CHECKED		REV. APPR.	

PROJECT NAME: BINAK OILFIELD DEVELOPMENT SURFACE WORK PACKAGES GENERAL

PROJECT NO.: 971020

EPC CONTRACTOR: HIRGAN ENERGY – DESIGN & INSPECTION COMPANIES

~~SEVERAL CONTRACTOR:~~ PEDCO — PETROIRAN DEVELOPMENT COMPANY

BINAK OILFIELD DEVELOPMENT SURFACE WORK PACKAGES GENERAL

DATE	SCALE	DRAWING BY	CHECKED BY	PROJECT ENG.

(VENDOR TITLE BLOCK)**

DRAWING TITLE: STANDARD DETAIL DRAWING FOR PRESSURE VESSELS AND HEAT EXCHANGERS (PLUGS FOR MIXED COUPLINGS)

NO CONSTRUCTION PERMITTED UNLESS DRAWING APPROVED

APPROVED FOR CONSTRUCTION | BY: | DATE:

SCALE	SIZE	DRAWING NO.	SHEET NO.	REV.
As Shown	A3	BK-GNRAL-PEDCO-000-ME-DW-0001	51 OF 55	D00

BUDGET REF.	LOCATION	SIZE	CLASS	SERIAL NO.	SHEET	REVISION

TITLE: NOZZLE PROJECTION (L) FOR VESSEL

NOZZLE DIAMETER NPS	L RATING 150# 300#	L RATING 600# 900#	L RATING 1500#
1"	200	200	200
1"1/2	200	200	200
2"	200	200	200
3"	200	250	250
4"	200	250	250
6"	250	250	300
8"	250	300	350
10"	250	300	400
12"	250	350	450
14"	300	350	450
16"	300	350	500
18"	350	400	500
20"	350	400	550
24"	350	450	600
26"	250	300	350
28"	250	300	350
30"	250	300	350
32"	250	300	350
34"	250	300	350
36"	250	300	350
38"	250	300	350

SEE NOTE 4

SEE NOTE 6

NOTES:

1. UNLESS OTHERWISE INDICATED ALL NOZZLES SHALL BE WELDED FLUSHED WITH THE INSIDE OF THE VESSEL. FOR MANHOLES AND HANDHOLES THE END SHALL BE ROUNDED OFF.
2. ALL DIMENSIONS ARE IN MILLIMETERS UNLESS OTHERWISE STATED.
3. IN CASE OF ANY CONFLICT BETWEEN THIS STANDARD AND VESSEL DRAWING, THE LATEST ISSUED DWG SHALL GOVERN.
4. WHEN THESE NOZZLES ARE USED LIKE MANHOLES ON CYLINDRICAL SHELL OR OR ON HEADS THE PROMINENCE L MUST BE SHORTED OF 100 mm.
5. THE PROJECTION FROM VESSEL AXIS TO NOZZLE FACING SHALL BE ROUNDED DOWN TO 10 mm.
6. FLANGES ⩾ 26 NPS WILL BE AS PER ASME B16.47 SERIES "A".
7. NPS = NOMINAL PIPE SIZE (NOMINAL DIAMETER WHEN US STANDARDS ARE USED).

NOTES

LEGEND

REFERENCE DRAWING	DRG. No.
**********	******

KEY PLAN

REV.	DATE	P.O.I.S	PREP.	CHK.	APP.	AUT.
D00	JUL.2021	IFI	M.Jaghargrajad	M.Fakharian	Sh.Ghalikar	**.**

REV.	DESCRIPTION	BY	DATE	BY	DATE
***	**********	**.**	***.****	**.**	***.****
		CHECKED		REV. APPR.	

PROJECT NAME: BINAK OILFIELD DEVELOPMENT SURFACE WORK PACKAGES GENERAL

PROJECT NO.: 971020

EPC CONTRACTOR: HIRGAN ENERGY – DESIGN & INSPECTION COMPANIES

SENIERAD CONTRACTOR: PETROIRAN DEVELOPMENT COMPANY — PEDCO

BINAK OILFIELD DEVELOPMENT SURFACE WORK PACKAGES GENERAL

DATE	SCALE	DRAWING BY	CHECKED BY	PROJECT ENG.

(VENDOR TITLE BLOCK)**

DRAWING TITLE: STANDARD DETAIL DRAWING FOR PRESSURE VESSELS AND HEAT EXCHANGERS (NOZZLE PROJECTION (L) FOR VESSEL)

NO CONSTRUCTION PERMITTED UNLESS DRAWING APPROVED

APPROVED FOR CONSTRUCTION | BY: | DATE:

SCALE	SIZE	DRAWING NO.	SHEET NO.	REV.
As Shown	A3	BK-GNRAL-PEDCO-000-ME-DW-0001	62 OF 65	D00

BUDGET REF.	LOCATION	SIZE	CLASS	SERIAL NO.	SHEET	REVISION

TITLE: NAMEPLATE FOR PRESSURE VESSELS & TOWERS

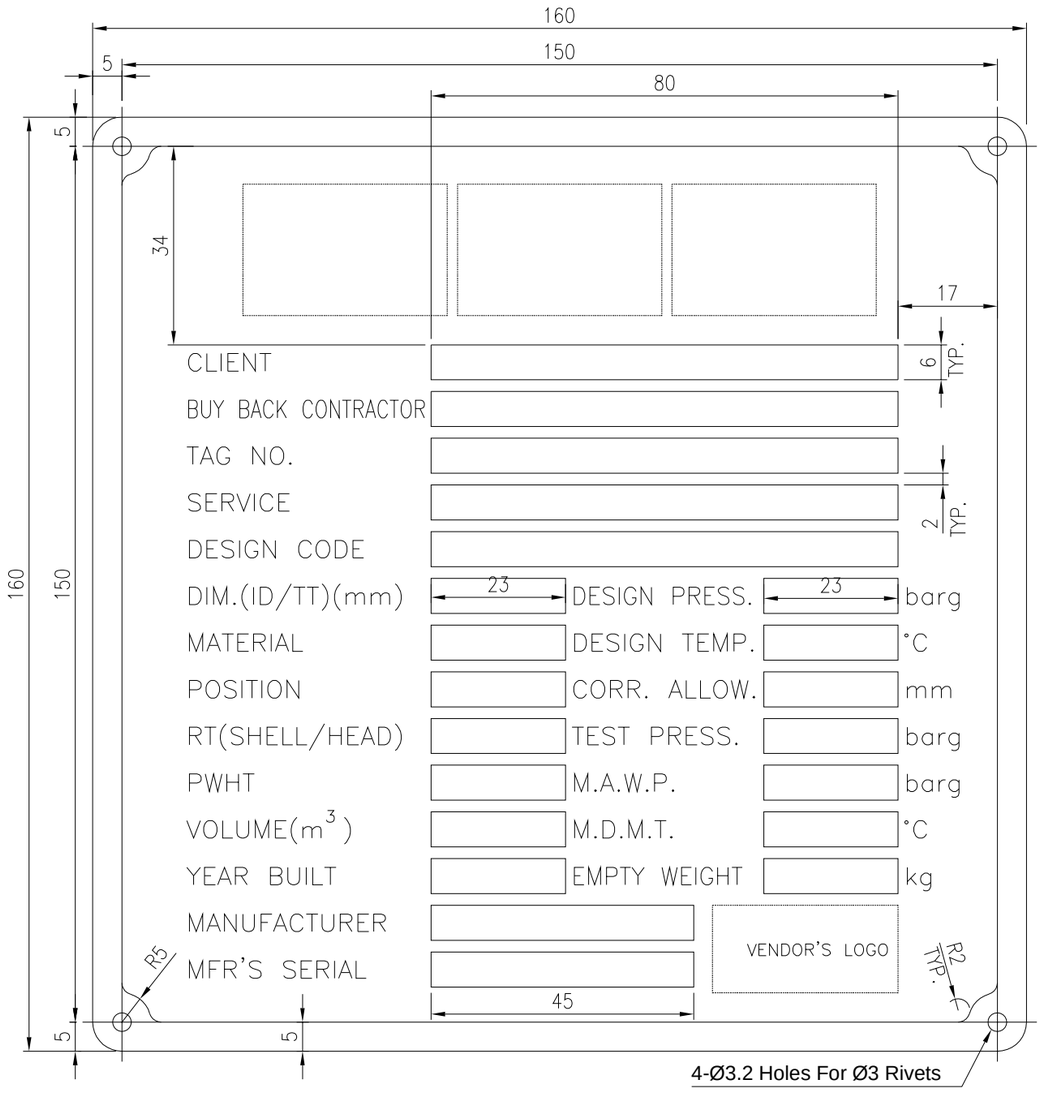

NOTES

1-MATERIAL OF NAMEPLATE SHALL BE STAINLESS STEEL.
2-MATERIAL OF RIVETS SHALL BE STAINLESS STEEL.

LEGEND

REFERENCE DRAWING	DRG. No.
**********	******

KEY PLAN

REV.	DATE	P.O.I.S	PREP.	CHK.	APP.	AUT.
D00	JUL.2021	IFI	M.Asgharvajed	M.Fakharian	Sh.Ghalikar	**.**

REV.	DESCRIPTION	BY	DATE	BY	DATE
***	**********	**.**	***.****	**.**	***.****
		CHECKED		REV. APPR.	

PROJECT NAME: BINAK OILFIELD DEVELOPMENT SURFACE WORK PACKAGES GENERAL

PROJECT NO.: 971020

EPC CONTRACTOR: HIRGAN ENERGY – DESIGN & INSPECTION COMPANIES

SERVERD CONTRACTOR: PETROIRAN DEVELOPMENT COMPANY (PEDCO)

BINAK OILFIELD DEVELOPMENT SURFACE WORK PACKAGES GENERAL

DATE	SCALE	DRAWING BY	CHECKED BY	PROJECT ENG.

(VENDOR TITLE BLOCK)**

DRAWING TITLE: STANDARD DETAIL DRAWING FOR PRESSURE VESSELS AND HEAT EXCHANGERS (NAMEPLATE FOR PRESSURE VESSELS & TOWERS)

NO CONSTRUCTION PERMITTED UNLESS DRAWING APPROVED

APPROVED FOR CONSTRUCTION | BY: | DATE:

SCALE	SIZE	DRAWING NO.	SHEET NO.	REV.
As Shown	A3	BK-GNRAL-PEDCO-000-ME-DW-0001	63 OF 65	D00

BUDGET REF.	LOCATION	SIZE	CLASS	SERIAL NO.	SHEET	REVISION

TITLE: NAMEPLATE FOR AIR COOLED HEAT EXCHANGERS

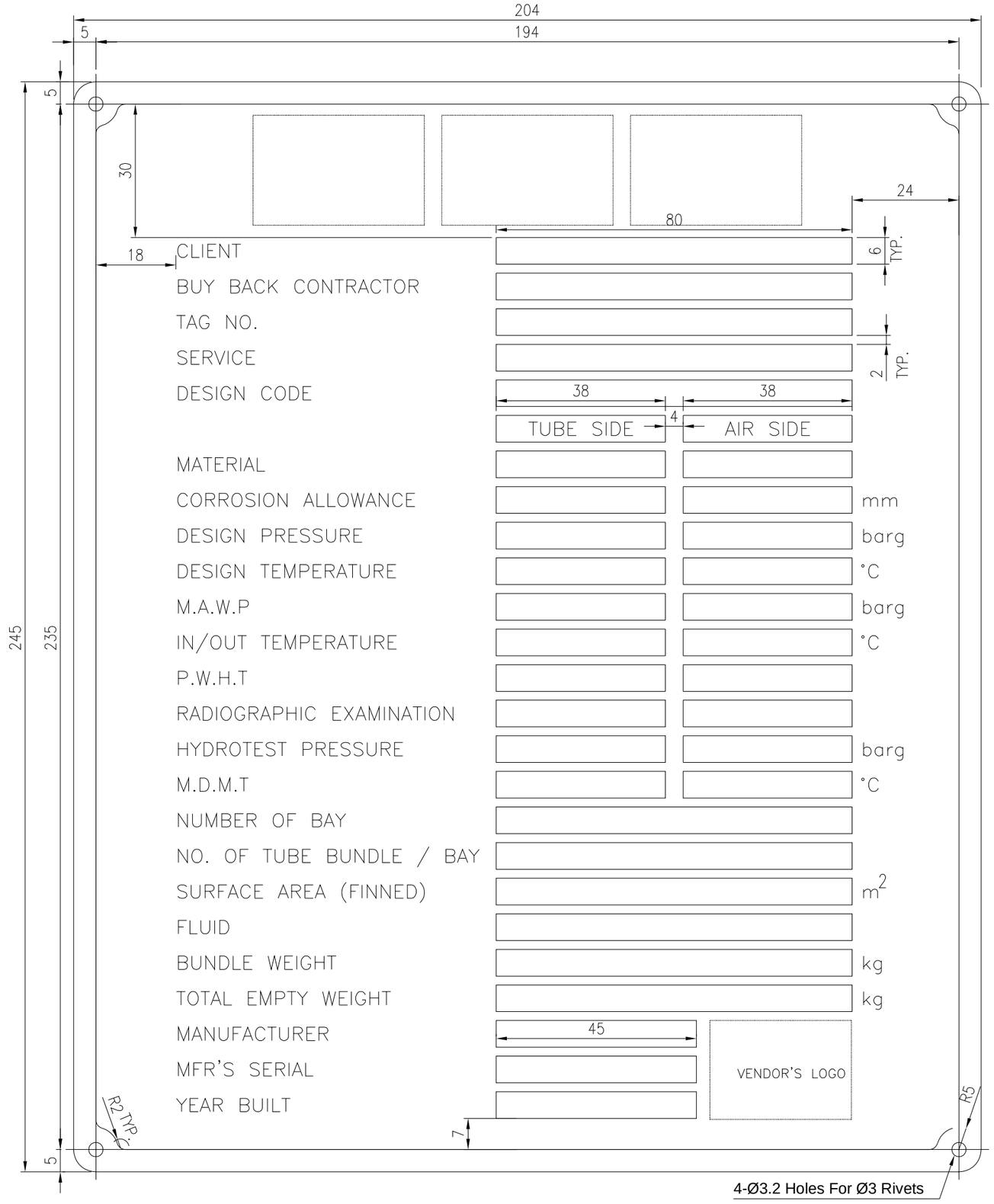

CLIENT			
BUY BACK CONTRACTOR			
TAG NO.			
SERVICE			
DESIGN CODE			
	TUBE SIDE	AIR SIDE	
MATERIAL			
CORROSION ALLOWANCE			mm
DESIGN PRESSURE			barg
DESIGN TEMPERATURE			°C
M.A.W.P			barg
IN/OUT TEMPERATURE			°C
P.W.H.T			
RADIOGRAPHIC EXAMINATION			
HYDROTEST PRESSURE			barg
M.D.M.T			°C
NUMBER OF BAY			
NO. OF TUBE BUNDLE / BAY			
SURFACE AREA (FINNED)			m^2
FLUID			
BUNDLE WEIGHT			kg
TOTAL EMPTY WEIGHT			kg
MANUFACTURER			
MFR'S SERIAL			
YEAR BUILT			

NOTES

1-MATERIAL OF NAMEPLATE SHALL BE STAINLESS STEEL.
2-MATERIAL OF RIVETS SHALL BE STAINLESS STEEL.

LEGEND

REFERENCE DRAWING	DRG. No.
**********	******

KEY PLAN

REV.	DATE	P.O.I.S	PREP.	CHK.	APP.	AUT.
D00	JUL.2021	IFI	M.Asgharnejad	M.Fakharian	Sh.Ghalikar	** **

REV.	DESCRIPTION	BY	DATE	BY	DATE
***	**********	** **	*** ****	** **	*** ****
		CHECKED		REV. APPR.	

PROJECT NAME: BINAK OILFIELD DEVELOPMENT SURFACE WORK PACKAGES GENERAL

PROJECT NO.: 971020

EPC CONTRACTOR: HIRGAN ENERGY – DESIGN & INSPECTION COMPANIES

SERVERD CONTRACTOR: PETROIRAN DEVELOPMENT COMPANY (PEDCO)

BINAK OILFIELD DEVELOPMENT SURFACE WORK PACKAGES GENERAL

DATE	SCALE	DRAWING BY	CHECKED BY	PROJECT ENG.

(VENDOR TITLE BLOCK)**

DRAWING TITLE: STANDARD DETAIL DRAWING FOR PRESSURE VESSELS AND HEAT EXCHANGERS (NAMEPLATE FOR AIR COOLED HEAT EXCHANGERS)

NO CONSTRUCTION PERMITTED UNLESS DRAWING APPROVED

APPROVED FOR CONSTRUCTION | BY: | DATE:

SCALE	SIZE	DRAWING NO.	SHEET NO.	REV.
As Shown	A3	BK-GNRAL-PEDCO-000-ME-DW-0001	54 OF 55	D00

BUDGET REF.	LOCATION	SIZE	CLASS	SERIAL NO.	SHEET	REVISION

TITLE: NAMEPLATE FOR SHELL & TUBE HEAT EXCHANGERS

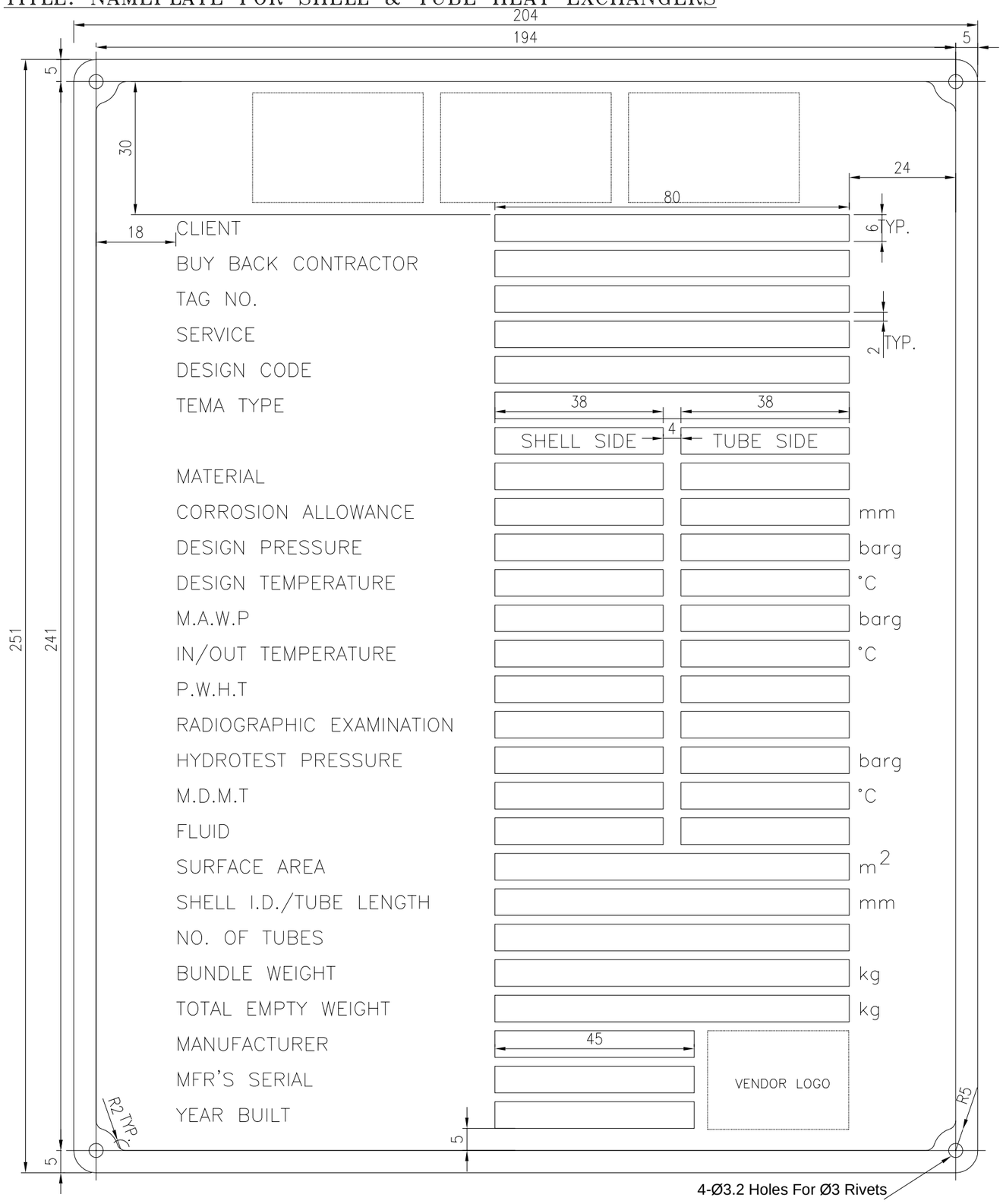

NOTES

1-MATERIAL OF NAMEPLATE SHALL BE STAINLESS STEEL.

2-MATERIAL OF RIVETS SHALL BE STAINLESS STEEL.

LEGEND

REFERENCE DRAWING	DRG. No.
**********	******

KEY PLAN

REV.	DATE	P.O.I.S	PREP.	CHK.	APP.	AUT.
D00	JUL.2021	IFI	M.Jaghargejad	M.Fakharian	Sh.Ghalikar	** **

REV.	DESCRIPTION	BY	DATE	BY	DATE
***	**********	** **	*** ****	** **	*** ****
		CHECKED		REV. APPR.	

PROJECT NAME: BINAK OILFIELD DEVELOPMENT SURFACE WORK PACKAGES GENERAL

PROJECT NO.: 971020

EPC CONTRACTOR: HIRGAN ENERGY – DESIGN & INSPECTION COMPANIES

~~SENIORD CONTRACTOR:~~ PEDCO — PETROIRAN DEVELOPMENT COMPANY

BINAK OILFIELD DEVELOPMENT
SURFACE WORK PACKAGES
GENERAL

DATE	SCALE	DRAWING BY	CHECKED BY	PROJECT ENG.

(VENDOR TITLE BLOCK)**

DRAWING TITLE:
STANDARD DETAIL DRAWING FOR PRESSURE VESSELS AND HEAT EXCHANGERS
(NAMEPLATE FOR SHELL & TUBE HEAT EXCHANGERS)

SCALE	SIZE	DRAWING NO.	SHEET NO.	REV.
As Shown	A3	BK-GNRAL-PEDCO-000-ME-DW-0001	55 OF 55	D00

NO CONSTRUCTION PERMITTED UNLESS DRAWING APPROVED

APPROVED FOR CONSTRUCTION | BY: | DATE:

BUDGET REF.	LOCATION	SIZE	CLASS	SERIAL NO.	SHEET	REVISION