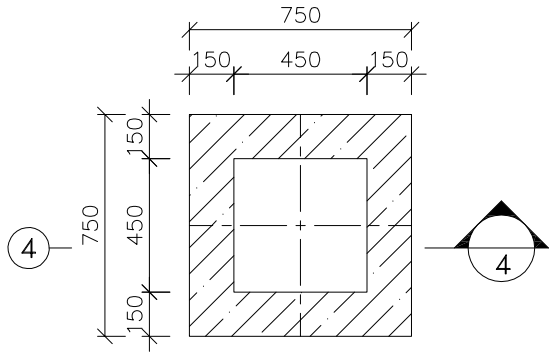

1:25 (1) EARTH PIT FORMWORK PLAN

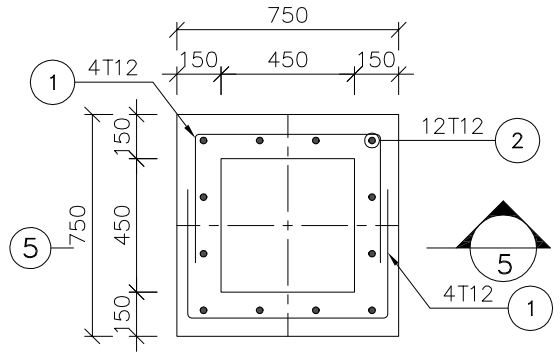

1:25 (2) EARTH PIT REINFORCEMENT PLAN

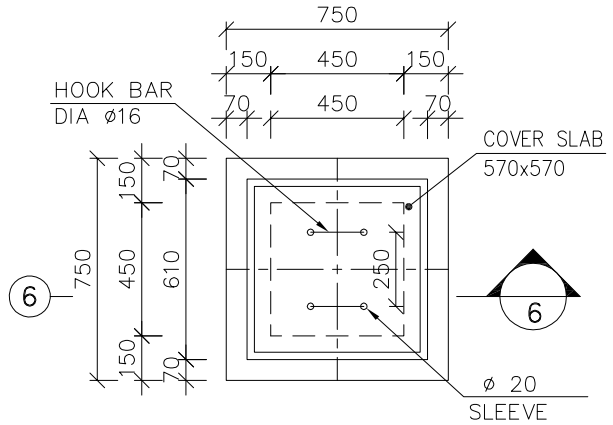

1:25 (3) COVER SLAB

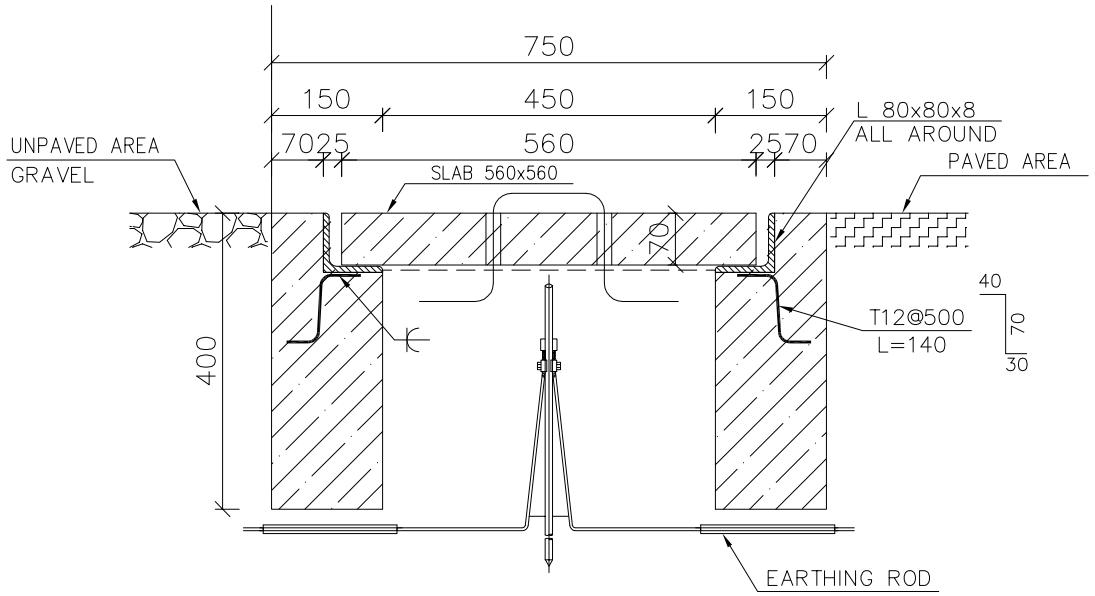

1:10 (4) FORMWORK

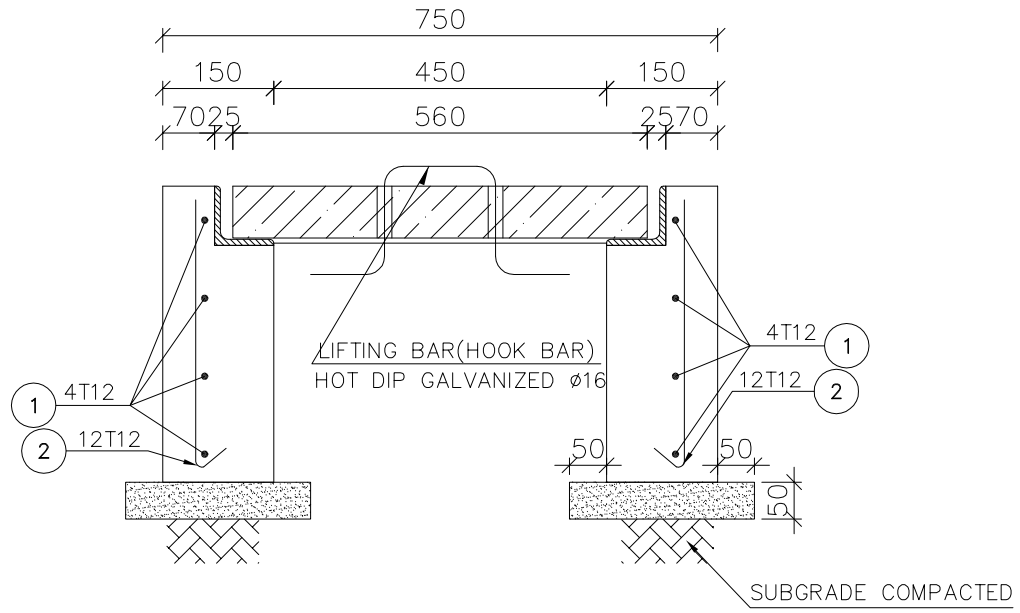

1:10 (5) REINFORCEMENT

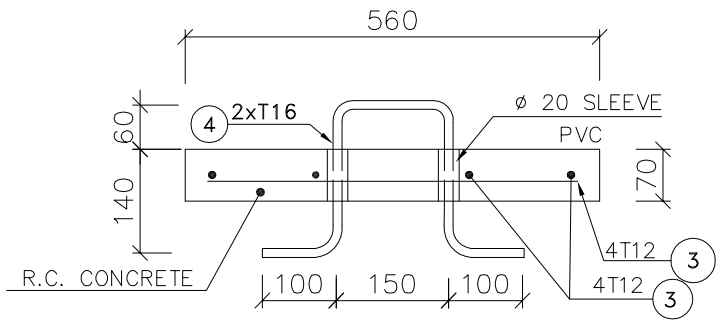

1:10 (6)

BAR BENDING SCHEDULE FOR WARNING SLAB						
Pos.	Dia.	LEN. (m)	NUM.	FIGURE (cm)	TOTAL LENGTH (m)	
					ϕ12	ϕ16
1	12	1.45	8	40 | 65 | 40	11.60	
2	12	0.50	12	10 / 30	6.00	
3	12	0.50	8	50	4.00	
4	16	0.75	2	10 20 | 15 | 10 20		1.50
TOTAL LENGHT OF DIAMETER					21.60	1.50
UNIT WEIGHT (kg/m)					0.888	1.580
TOTAL WEIGTH (Kg)					19.18	2.37
					21.55 Kg	

NOTE:
-ABOVE QUANTITIES ARE FOR ONE SLAB.

NOTES

1. ALL DIMENSIONS ARE IN MILLIMETERS UNLESS OTHERWISE STATED.
2- ACCORDING TO THE SPECIFICATION OF CONCRETE WORKS: "BK-GNRL-PEDCO-000-ST-SP-0001",28 DAYS CHARACTERISTIC COMPRESSIVE STRENGTH OF MAIN CONCRETE IS 30 MPa(ON CYLINDRICAL SPECIMEN)
3- REINFORCING BARS SHALL BE S400 ACCORDING TO: ISIRI3132 AND INBC9 WITH MINIMUM TENSILE YIELD STRENGTH 400 N/mm^2
4- PORTLAND CEMENT SHALL BE REFERED TO GEOTECHNICAL INVESTIGATION REPORT.
5-ALL EXCAVATION & BACK FILL FOR CONCRETE WORK SHALL COMPLY WITH SPECIFICATION FOR EARTH WORK.

LEGEND AND ABBRIVIATION

- REINFORCED CONCRETE
- GRAVEL
- CONCRETE PAVING
- COMPACTED SUBGRADE

REFERENCE DRAWING	DRG. No.
GENERAL NOTES - REINFORCED CONCRETE STRUCTURES	BK-GNRAL-PEDCO-000-ST-DW-0012
GROUNDING INSTALLATION DETAILS "CATEGORY 400" GROUNDING ROD	IPS-D-EL-401

KEY PLAN

REV.	DATE	P.O.I.S	PREP.	CHK.	APP.	AUT.
D02	AUG.2022	AFC	R.BERLOUIE	M.FAKHARIAN	M.MEHRSHAD	**.**
D01	JUN.2022	IFA	R.BERLOUIE	M.FAKHARIAN	M.MEHRSHAD	**.**
D00	FEB.2022	IFC	R.BERLOUIE	M.FAKHARIAN	M.MEHRSHAD	**.**

REV.	DESCRIPTION	CHECKED BY	CHECKED DATE	REV. APPR. BY	REV. APPR. DATE
***	**********	**.**	***.****	**.**	***.****

PROJECT NAME: BINAK OILFIELD DEVELOPMENT GENERAL

PROJECT NO.: 971020

اصل و کلیه نسخ این نقشه و حق اقتباس متعلق به شرکت ملی مناطق نفت خیز جنوب میباشد.
THE ORIGINAL AND ALL COPIES OF THIS DRAWING TOGETHER WITH THE COPYRIGHT THEREIN ARE THE SOLE PROPERTY OF N.I.S.O.C./ FIELDS

EPC CONTRACTOR: HIRGAN ENERGY - DESIGN & INSPECTION COMPANIES

EPD/EPC CONTRACTOR(GC): PETROIRAN DEVELOPMENT COMPANY (PEDCO)

BINAK OILFIELD DEVELOPMENT GENERAL

DATE	SCALE	DRAWING BY	CHECKED BY	PROJECT ENG.

DRAWING TITLE: STANDARD DRAWING FOR EARTH PIT

NO CONSTRUCTION PERMITTED UNLESS DRAWING APPROVED

APPROVED FOR CONSTRUCTION BY: DATE:

SCALE	SIZE	DRAWING NO.	SHEET NO.	REV.
AS SHOWN	A3	BK-GNRAL-PEDCO-000-CV-DW-0037	1 OF 1	D02

BUDGET REF.	LOCATION	SIZE	CLASS	SERIAL NO.	SHEET	REVISION
053-073-9184	F	4	2	707263	1	D02