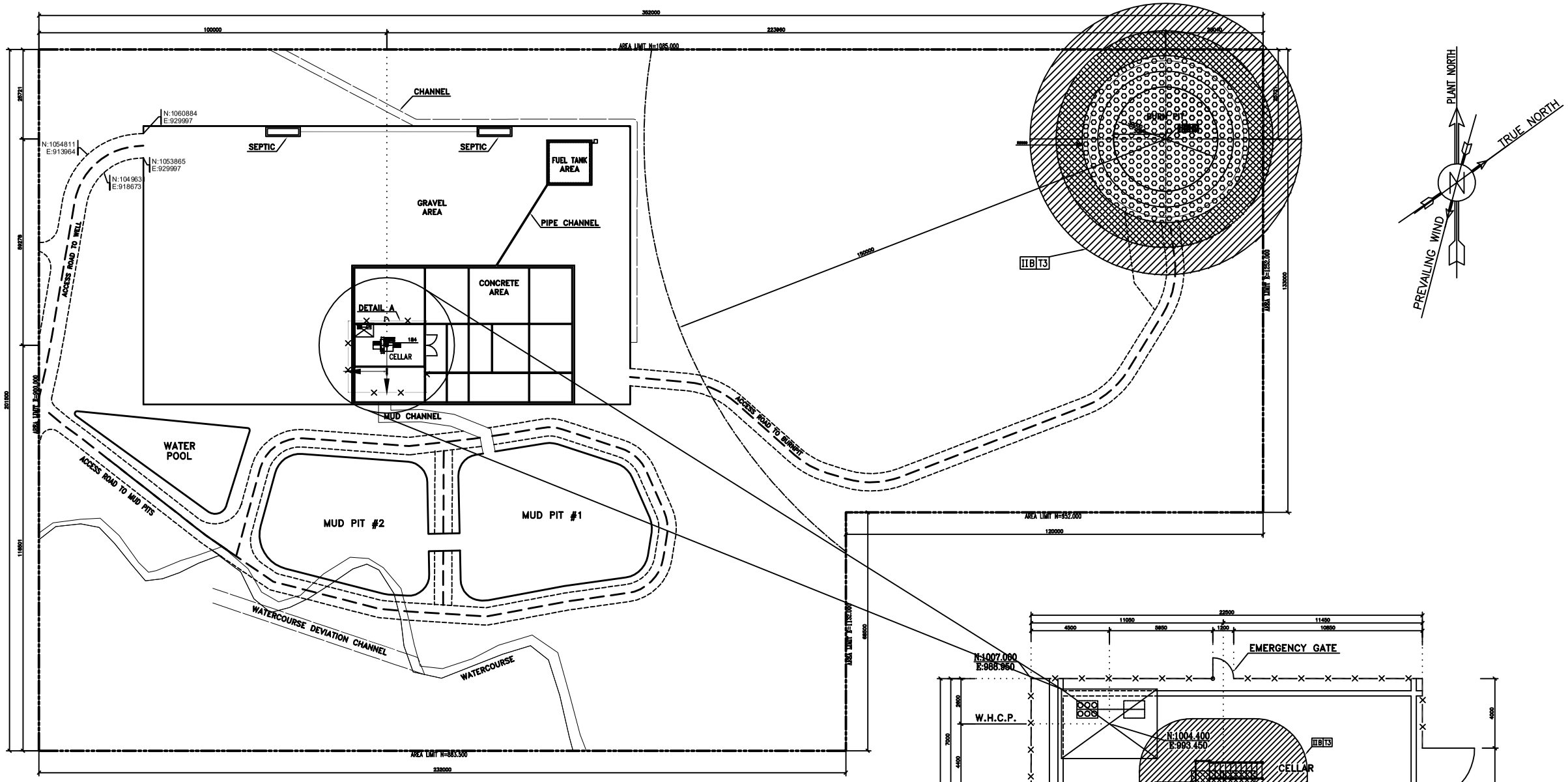

WELLHEAD PLOT PLAN

WELL NO.: W028 SC: 1/500

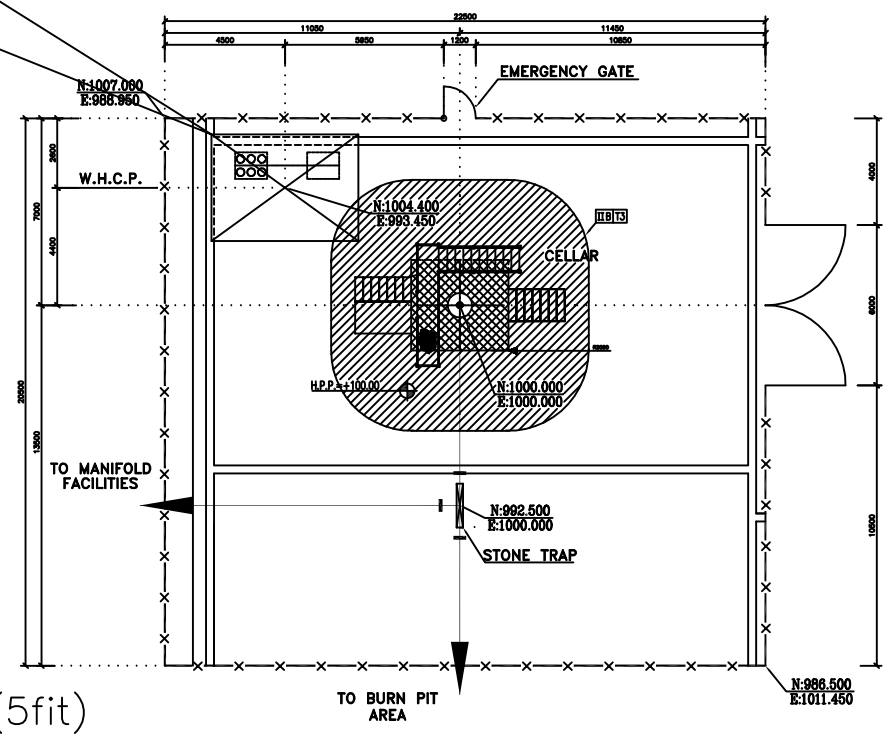

DETAIL A

SC: 1/100

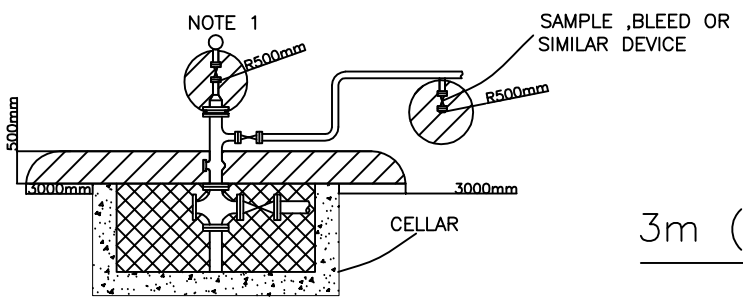

Figure 40-Flowing Well in a Non-enclosed, Adequately Ventilated Area with an Inadequately Ventilated Cellar or Below-grade Sump

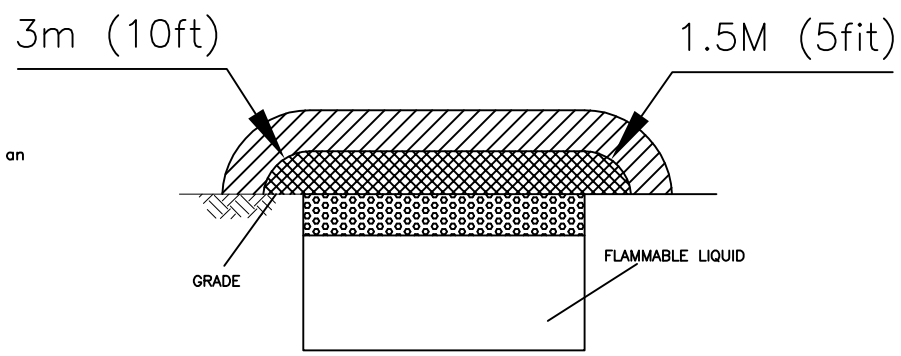

Figure 57. Open Sump in Nonenclosed Adequately Ventilated Area

NOTES

1- ALL DIMENSIONS ARE IN MILLIMETERS, EXCEPT OTHERWISE NOTED.
2- ALL COORDINATES AND ELEVATIONS ARE IN METERS.
3- ALL COORDINATES OF THIS PLAN ARE LOCAL.
4- THE AREA AROUND VALVE OPERATORS UTILIZING FLAMMABLE GAS OR FLUID AS THE POWER MEDIUM IN A NON-ENCLOSED ADEQUATELY VENTILATED AREA IS CLASSIFIED ZONE 2 WITHIN 0.5 METERS OF THE OPERATOR PROVIDED ALL VENTS ARE EXTENDED TO THE OUTSIDE OF THE AREA.

LEGEND & ABBREVIATIONS

SYMBOLS	DESCRIPTION
	ZONE 0
	ZONE 1
	ZONE 2
II.T.T.	GAS GROUP AND TEMPERATURE CLASS

REFERENCE DRAWING	DRG. No.
PLOT PLAN DRAWING - W028	BK-W028-PEDCO-110-PY-DW-0001
HAZARD SOURCE LIST - W028	BK-W028-PEDCO-110-SA-LI-0001

KEY PLAN

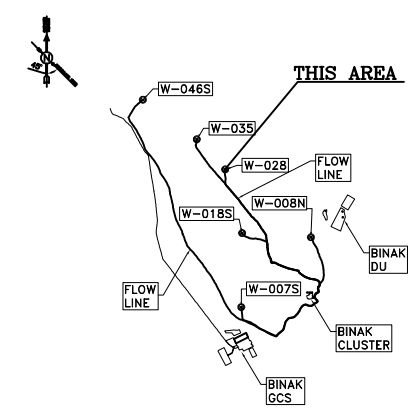

REV.	DATE	P.O.I.S	PREP.	CHK.	APP.	AUT.
D02	NOV.2022	AFC	A.H.SABER	M.FAKHARIAN	M.MEHRSHAD	••,••
D01	OCT.2022	IFA	A.H.SABER	M.FAKHARIAN	M.MEHRSHAD	••,••
D00	APR.2022	IFC	A.H.SABER	M.FAKHARIAN	M.MEHRSHAD	••,••

REV.	DESCRIPTION	BY	DATE	BY	DATE
•••	••••••••••••	••,••	•••,••••	••,••	•••,••••
		CHECKED		REV. APPR.	

PROJECT NAME: BINAK OILFIELD DEVELOPMENT/SUB-SURFACE WORK PACKAGES W028 WELLHEAD FACILITIES

PROJECT NO.: 971020

EPC CONTRACTOR: HIRGAN ENERGY – DESIGN & INSPECTION COMPANIES

GENERAL CONTRACTOR: PETROIRAN DEVELOPMENT COMPANY (PEDCO)

DRAWING TITLE: HAZARDOUS AREA CLASSIFICATION LAYOUT - W028

SCALE	SIZE	DRAWING NO.	SHEET NO.	REV.
AS SHOWN	A3	BK-W028-PEDCO-110-SA-PY-0001	1 OF 1	D02

اصل و کلیه نسخ این نقشه و حق اقتباس متعلق به شرکت ملی مناطق نفت خیز جنوب میباشد.

THE ORIGINAL AND ALL COPIES OF THIS DRAWING TOGETHER WITH THE COPYRIGHT THEREIN ARE THE SOLE PROPERTY OF N.I.S.O.C./ FIELDS

BINAK OILFIELD DEVELOPMENT SUB-SURFACE WORK — PACKAGES W028 WELLHEAD FACILITIES

DATE	SCALE	DRAWING BY	CHECKED BY	PROJECT ENG.

NO CONSTRUCTION PERMITTED UNLESS DRAWING APPROVED

APPROVED FOR CONSTRUCTION BY: DATE:

BUDGET REF.	LOCATION	SIZE	CLASS	SERIAL NO.	SHEET	REVISION
053-073-9184	F	2	L	707540	1 OF 1	D02