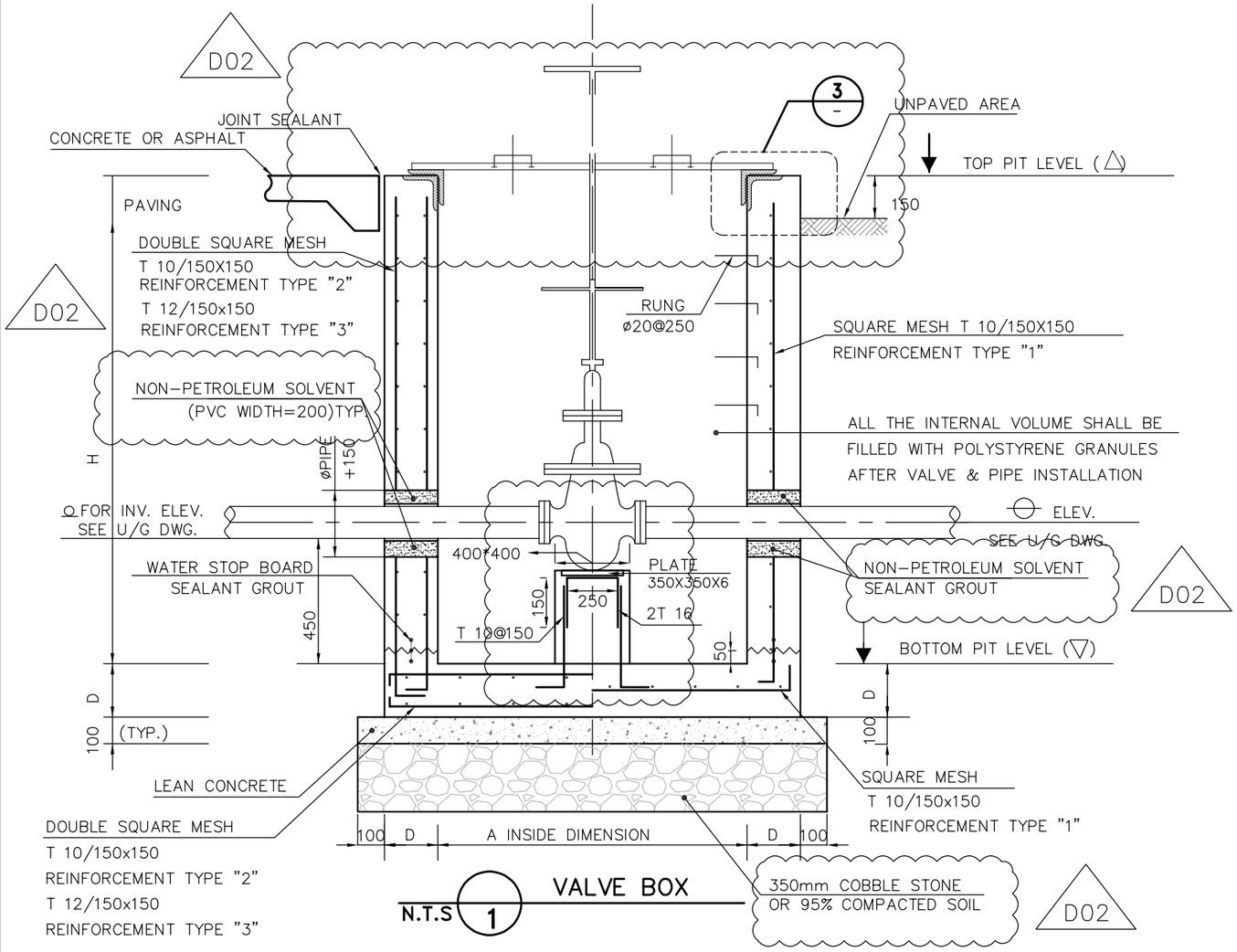

N.T.S 1 VALVE BOX

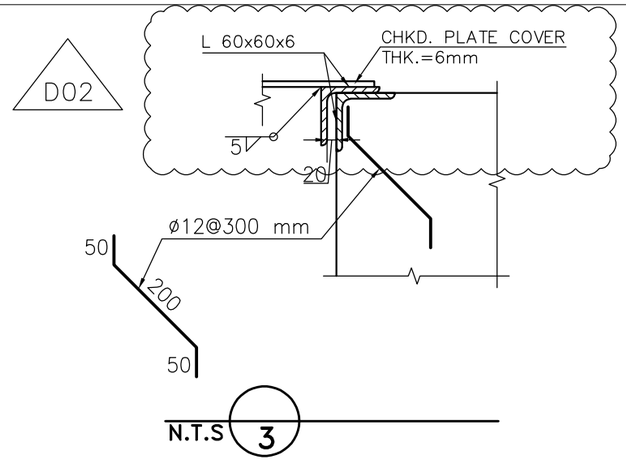

N.T.S 3

STANDARD INSIDE

A = 1300X1300 FOR PIPE DIAM. 1 1/2~4"
A = 1500X1500 FOR PIPE DIAM. 6"~10"
A = 1750X1750 FOR PIPE DIAM. 12"~16"
A = 1900X1900 FOR PIPE DIAM. 18"~20"

PIT DIMENSIONS

FOR H<2000 D=150	REINFORCEMENT TYPE "1"
FOR 2000<H<3000 D=250	REINFORCEMENT TYPE "2"
FOR H≥3000 D=300	REINFORCEMENT TYPE "3"

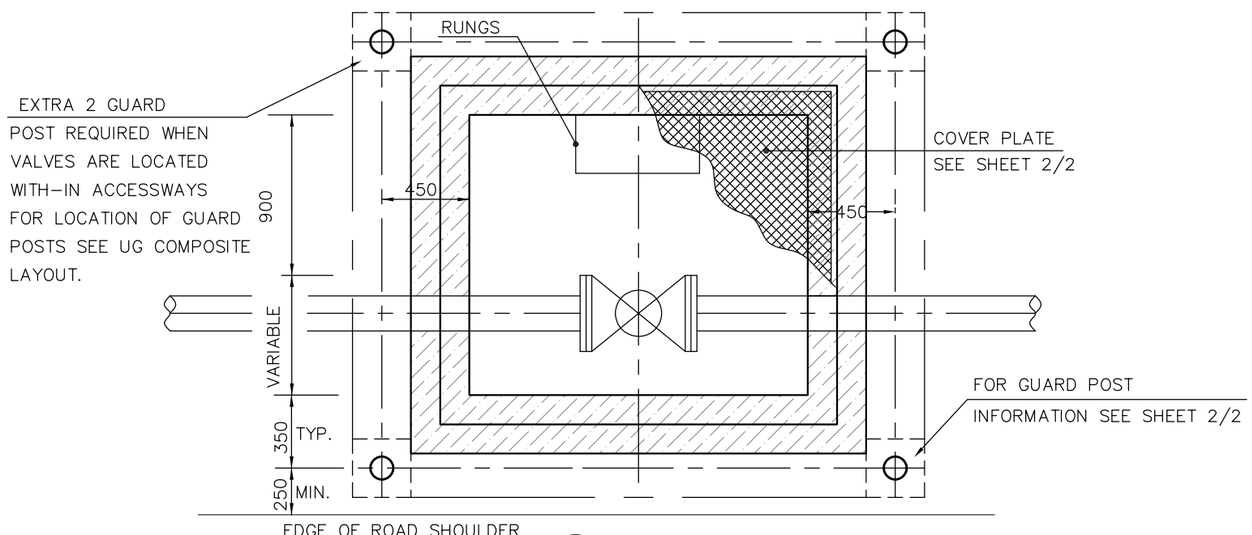

N.T.S 2 TYPICAL PLAN

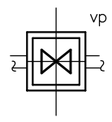

N.T.S 4 SYMBOL ON U/G DWG

NOTES

1- ALL DIMENSION ARE IN MILLIMETERS UNLESS OTHERWISE STATED.
2- 15mm OF BIUTMENOUS MATERIAL IS TO PROVIDED AS JOINTS BETWEEN PAVING AND VALVE BOX.
3- ACCORDING TO THE SPECIFICATION OF CONCRETE WORKS, 28 DAYS CHARACTERISTIC COMPRESSIVE STRENGTH OF CONCRETE IS 25MPa. (ON CYLINDRICAL SPECIMEN).
4- ACCORDING TO THE SPECIFICATION OF CONCRETE WORKS, 28 DAYS CHARACTERISTIC COMPRESSIVE STRENGTH OF LEAN CONCRETE IS 10MPa. (ON CYLINDRICAL SPECIMEN).
5-TYPE II CEMENT SHALL BE USED BASED ON GEOTECHNICAL SITE REPORT .
6- REINFORCING BARS SHALL BE S400 ACCORDING TO: ISIRI3132 AND INBC9 WITH MINIMUM TENSILE YIELD STRENGTH 400 N/mm^2
7- FOR LADDER RUNGS DETAIL SEE SHEET 2/2.
9- UNDERGROUND CONCRETE SHALL BE PROTECTED AND COATED ACCORDING TO RELEVANT SPECIFICATION.
10- AFTER THE APPROVAL OF THE GEOTECHNICAL REPORT, THE TYPE OF CEMENT WILL BE ANNOUNCED

LEGEND

- REINFORCED CONCRETE
- LEAN CONCRETE
- GRAVEL
- UNPAVED AREA
- SAND CEMENT GROUT

REFERENCE DRAWING	DRG. No.
Specification For Concrete Work	BK-GNRAL-PEDCO-000-ST-SP-0001
Underground System Single Valve Pits	NIOEC-SD-1006-5/10-A3
Valve Chambers & Trenches For Water Pipes	IPS-D-CE-190

KEY PLAN

REV.	DATE	P.O.I.S	PREP.	CHK.	APP.	AUT.
D02	DEC.2022	IFI	R.BERLOUIE	M.FAKHARIAN	M.Mehrshad	
D01	AUG.2022	IFI	R.BERLOUIE	M.FAKHARIAN	M.Mehrshad	
D00	JAN.2022	IFI	R.BERLOUIE	M.FAKHARIAN	M.Mehrshad	

REV.	DESCRIPTION	BY	DATE	BY	DATE
		CHECKED		REV. APPR.	
***	**********	**.**	***.****	**.**	***.****

PROJECT NAME: BINAK OILFIELD DEVELOPMENT GENERAL

PROJECT NO.: 971020

EPC CONTRACTOR: HIRGAN ENERGY – DESIGN & INSPECTION COMPANIES

EPD/EPC CONTRACTOR (GC): PEDCO — PETROIRAN DEVELOPMENT COMPANY

DRAWING TITLE: STANDARD DRAWING FOR VALVE BOX
VALVE BOX DETAIL

SCALE	SIZE	DRAWING NO.	SHEET NO.	REV.
N.T.S	A3	BK-GNRAL-PEDCO-000-CV-DW-0016	01 OF 02	D02

اصل و کلیه نسخ این نقشه و حق اقتباس متعلق به شرکت ملی مناطق نفت خیز جنوب میباشد.
THE ORIGINAL AND ALL COPIES OF THIS DRAWING TOGETHER WITH THE COPYRIGHT THEREIN ARE THE SOLE PROPERTY OF N.I.S.O.C./ FIELDS

BINAK OILFIELD DEVELOPMENT GENERAL

DATE	SCALE	DRAWING BY	CHECKED BY	PROJECT ENG.

NO CONSTRUCTION PERMITTED UNLESS DRAWING APPROVED

APPROVED FOR CONSTRUCTION BY: DATE:

BUDGET REF.	LOCATION	SIZE	CLASS	SERIAL NO.	SHEET	REVISION
053-073-9184	F	4	S	707258	1	D02

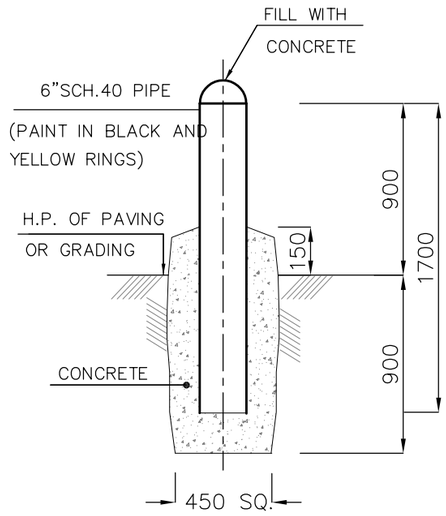

D02

N.T.S 1 GUARD POST

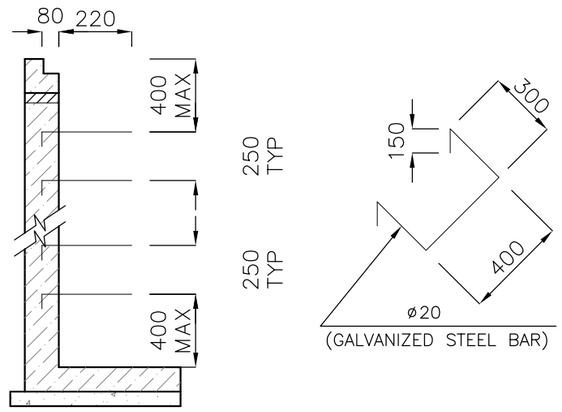

N.T.S 2 LADDER RUNGS DETAIL
(ONLY FOR H ≥ 1050)

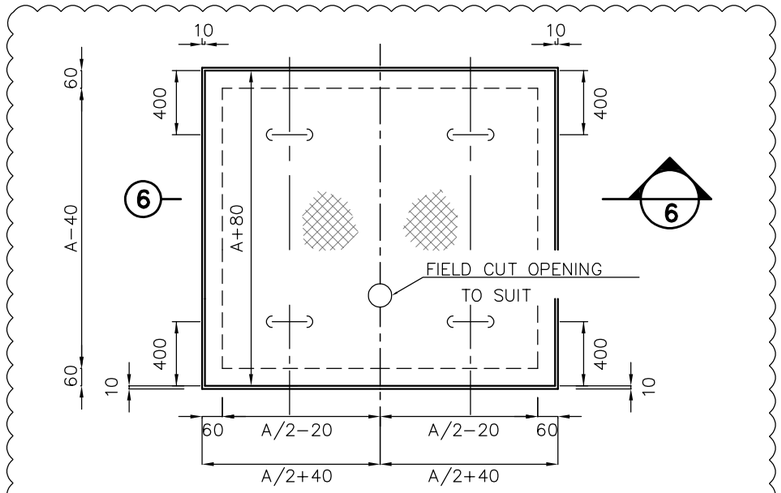

N.T.S 3 CHECKERED PLATE COVER (6 THK.)
(WELDED ON L 80X80X8 SEE DETAIL 6)

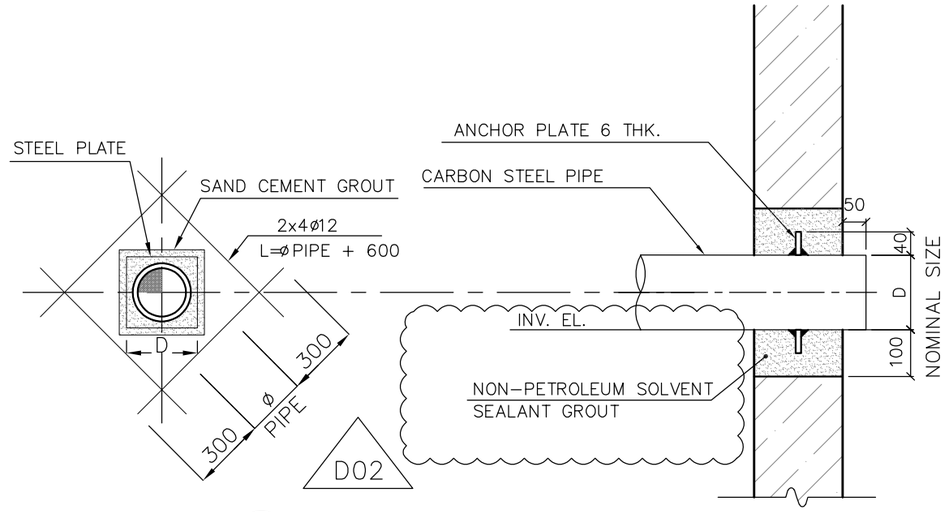

N.T.S 4 HOLES REINFORCEMENT
(TYPICAL FOR INLET/OUTLET CARBON STEEL PIPE)

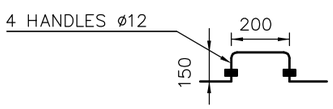

N.T.S 5

NOTES

1- ALL DIMENSION ARE IN MILLIMETERS UNLESS OTHERWISE STATED.

LEGEND

- REINFORCED CONCRETE
- LEAN CONCRETE
- BACKFILL
- GRAVEL
- UNPAVED AREA
- SAND CEMENT GROUT

REFERENCE DRAWING	DRG. No.
Specification For Concrete Work	BK-GNRAL-PEDCO-000-ST-SP-0001
Underground System Single Valve Pits	NIOEC-SD-1006-5/10-A3
Valve Chambers & Trenches For Water Pipes	IPS-D-CE-190

KEY PLAN

REV.	DATE	P.O.I.S	PREP.	CHK.	APP.	AUT.
D02	DEC.2022	IFI	R.BERLOUIE	M.FAKHARIAN	M.Mehrshad	
D01	AUG.2022	IFI	R.BERLOUIE	M.FAKHARIAN	M.Mehrshad	
D00	JAN.2022	IFI	R.BERLOUIE	M.FAKHARIAN	M.Mehrshad	

REV.	DESCRIPTION	BY	DATE	BY	DATE
		CHECKED		REV. APPR.	
***	**********	**.**	***.****	**.**	***.****

PROJECT NAME: BINAK OILFIELD DEVELOPMENT GENERAL

PROJECT NO.: 971020

EPC CONTRACTOR: HIRGAN ENERGY – DESIGN & INSPECTION COMPANIES

EPD/EPC CONTRACTOR (GC): PETROIRAN DEVELOPMENT COMPANY (PEDCO)

اصل و کلیه نسخ این نقشه و حق اقتباس متعلق به شرکت ملی مناطق نفت خیز جنوب میباشد.

THE ORIGINAL AND ALL COPIES OF THIS DRAWING TOGETHER WITH THE COPYRIGHT THEREIN ARE THE SOLE PROPERTY OF N.I.S.O.C./ FIELDS

BINAK OILFIELD DEVELOPMENT GENERAL

DATE	SCALE	DRAWING BY	CHECKED BY	PROJECT ENG.

DRAWING TITLE: STANDARD DRAWING FOR VALVE BOX GUARD POST, LADDER RUNGS & COVER DETAIL

NO CONSTRUCTION PERMITTED UNLESS DRAWING APPROVED

APPROVED FOR CONSTRUCTION BY: DATE:

SCALE	SIZE	DRAWING NO.	SHEET NO.	REV.	BUDGET REF.	LOCATION	SIZE	CLASS	SERIAL NO.	SHEET	REVISION
N.T.S	A3	BK-GNRAL-PEDCO-000-CV-DW-0016	02 OF 02	D02	053-073-9184	F	4	S	707258	2	D02