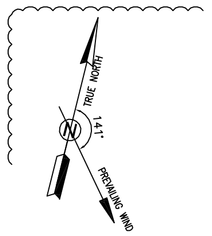

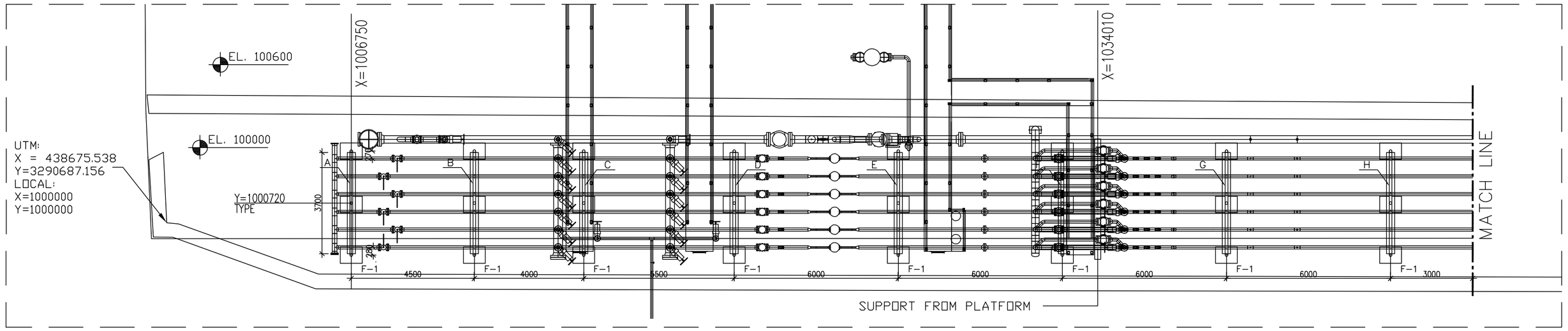

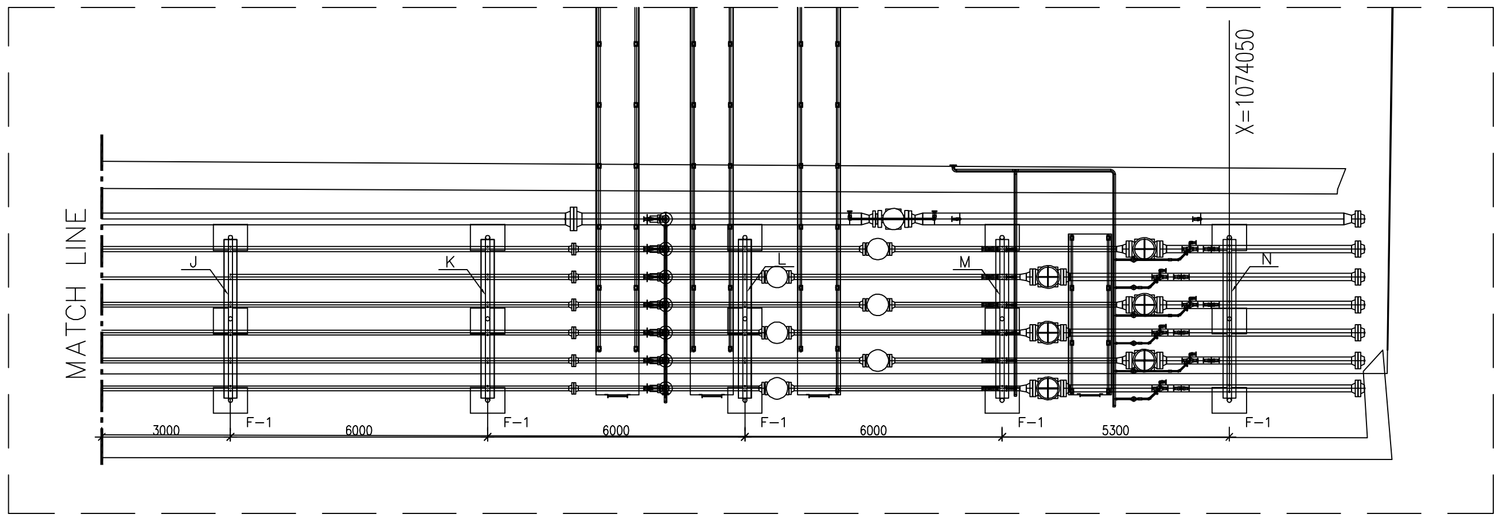

PIPE SUPPORT PLAN

SC:1/100

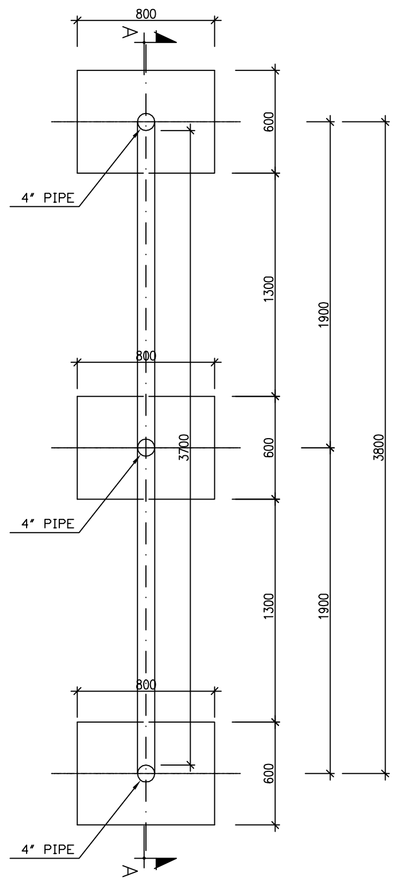

PIPE SUPPORT PLAN

F-1 SC:1/25

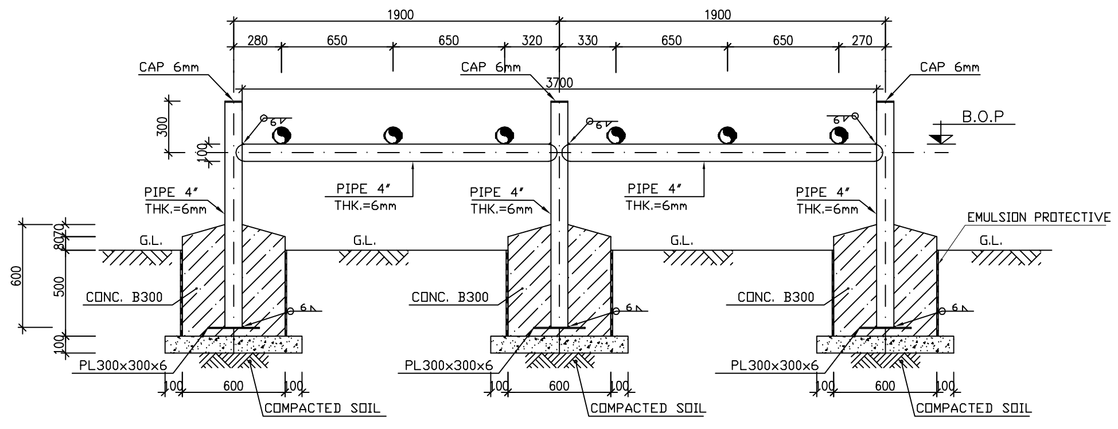

SECTION A-A

SC:1/25

	GROUND LEVEL	BOTTOM OF PIPE
A	54.40	55.60
B	54.45	55.60
C	54.50	55.60
D	54.70	55.60
E	54.85	55.60
F	54.90	55.60
G	55.00	55.60
H	55.10	55.60
J	55.20	55.60
K	55.30	55.60
L	55.30	55.60
M	55.40	55.60
N	55.30	55.60

NOTES

1) DIMENSIONS ARE IN "mm" AND ELEVATIONS IN "m" UNLESS SPECIFIED.
2) ALL DIMENSIONS AND ELEVATIONS SHALL BE CHECKED BY THE CONTRACTOR PRIOR TO CONSTRUCTION.
3) CONTRACTOR SHALL CHECK THE DRAWING WITH ALL ARCHITECTURAL, MECHANICAL, INSTRUMENT, PIPING & ELECTRICAL DRAWINGS BEFORE CONSTRUCTION AND ANY REQUIRED MODIFICATIONS SHALL BE CONSIDERED WITH PRIOR CLIENT APPROVAL.
4) ANCHOR BOLTS, NUTS, WASHERS, OTHER THREADED FASTENERS & ALL STEEL STAIR MEMBERS SHALL BE HOT DIP GALVANIZED ACCORDANCE WITH ISIRI 19289 & STEEL PLATES SHALL BE HOT DIP GALVANIZED WITH ISIRI 16353.
5) STEEL MATERIALS SHALL BE CONSIDERED FOR: PROFILES, PLATES AND GRATING AS ISIRI 14262-2.(S235JR) D01
6) STANDARD SPECIFICATION FOR PORTLAND CEMENT TYPE II (ASTM C150)
7) CONCRETE ACCORDING TO MINIMUM COMPRESSIVE STRENGTH AT 28 DAYS ON CYLINDER SPECIMEN 25MPa.

H.P.P. LEVEL : ±0.00 =+55.00

LEGEND

- REINFORCED CONCRETE
- LEAN CONCRETE
- COMPACTED SOIL

T.O.GR. TOP OF GRATING
G.L. GROUND LEVEL
C.S. CARBON STEEL

REFERENCE DRAWING	DRG. No.
GENERAL NOTES - STEEL STRUCTURES	BK-GNRAL-PEDCO-00-ST-DW-0012
SPECIFICATION FOR ERECTION OF STEEL STRUCTURES	BK-GNRAL-PEDCO-000-ST-SP-0005
SPECIFICATION FOR FABRICATION OF STEEL STRUCTURES	BK-GNRAL-PEDCO-000-ST-SP-0003
GENERAL NOTES - REINFORCEMENT CONCRETE STRUCTURES	BK-GNRAL-PEDCO-000-ST-DW-0012
SPECIFICATION FOR EARTH WORK	BK-GNRAL-PEDCO-000-CV-SP-0004
GENERAL CIVIL LAYOUT-EXTENSION OF BINAK B/C MANIFOLD	BK-W007S-PEDCO-110-CV-PY-0003
PLOT PLAN DRAWING-EXTENSION OF BINAK B/C MANIFOLD	BK-W007S-PEDCO-110-PI-PY-0001
PIPE SUPPORTS FOUNDATION DRAWING FOR EXTENSION OF BINAK B/C MANIFOLD	BK-W007S-PEDCO-110-ST-DW-0001

D01

KEY PLAN

REV.	DATE	P.O.I.S	PREP.	CHK.	APP.	AUT.
D01	JAN.2023	IFC	R.BERLOUIE	M.FAKHARIAN	M.Mehrabad	**.**
D00	SEP.2022	IFC	R.BERLOUIE	M.FAKHARIAN	M.Mehrabad	**.**

REV.	DESCRIPTION	BY	DATE	BY	DATE
***	**********	**.**	***.****	**.**	***.****
		CHECKED		REV. APPR.	

PROJECT NAME: BINAK OILFIELD DEVELOPMENT/SUB-SURFACE WORK PACKAGES W007S WHF & EXTENSION OF BINAK B/C

PROJECT NO.: 971020

EPC CONTRACTOR: HIRGAN ENERGY – DESIGN & INSPECTION COMPANIES

EPD/EPC CONTRACTOR (GC): PEDCO — PETROIRAN DEVELOPMENT COMPANY

DRAWING TITLE: PIPE SUPPORT STRUCTURE DRAWING FOR EXTENSION OF BINAK B/C MANIFOLD

اصل و کلیه نسخ این نقشه و حق اقتباس متعلق به شرکت ملی مناطق نفت خیز جنوب میباشد.

THE ORIGINAL AND ALL COPIES OF THIS DRAWING TOGETHER WITH THE COPYRIGHT THEREIN ARE THE SOLE PROPERTY OF N.I.S.O.C./ FIELDS

BINAK OILFIELD DEVELOPMENT
SUB-SURFACE WORK PACKAGES
W007S WHF & EXTENSION OF BINAK B/C

DATE	SCALE	DRAWING BY	CHECKED BY	PROJECT ENG.

NO CONSTRUCTION PERMITTED UNLESS DRAWING APPROVED

APPROVED FOR CONSTRUCTION | BY: | DATE:

SCALE	SIZE	DRAWING NO.	SHEET NO.	REV.	BUDGET REF.	LOCATION	SIZE	CLASS	SERIAL NO.	SHEET	REVISION
AS SHOWN	A1	BK-W007S-PEDCO-110-ST-DW-0002	1 OF 1	D01	053-073-9184	F	4	Q	708054	1 OF 1	D01