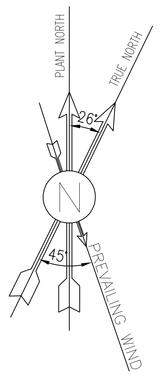

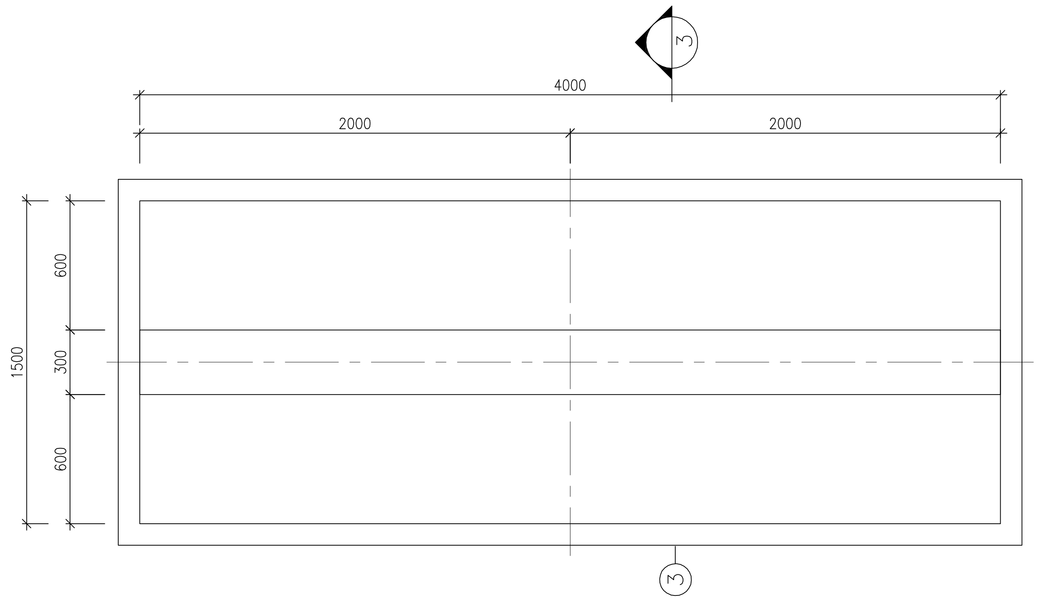

1:20 (1) FOUNDATION FORMWORK PLAN
PIPE SLEEPERS TYPE A (NO. : 11)

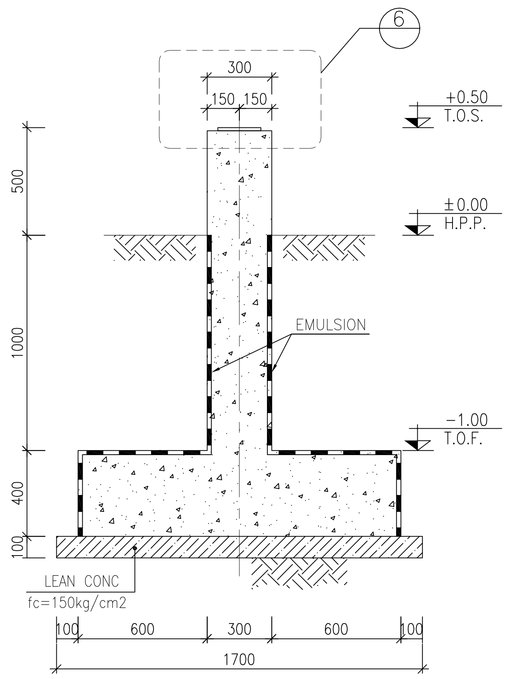

1:20 (3) FORMWORK

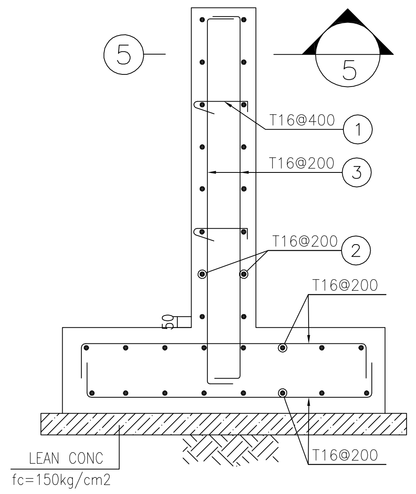

1:20 (4) REINFORCEMENT

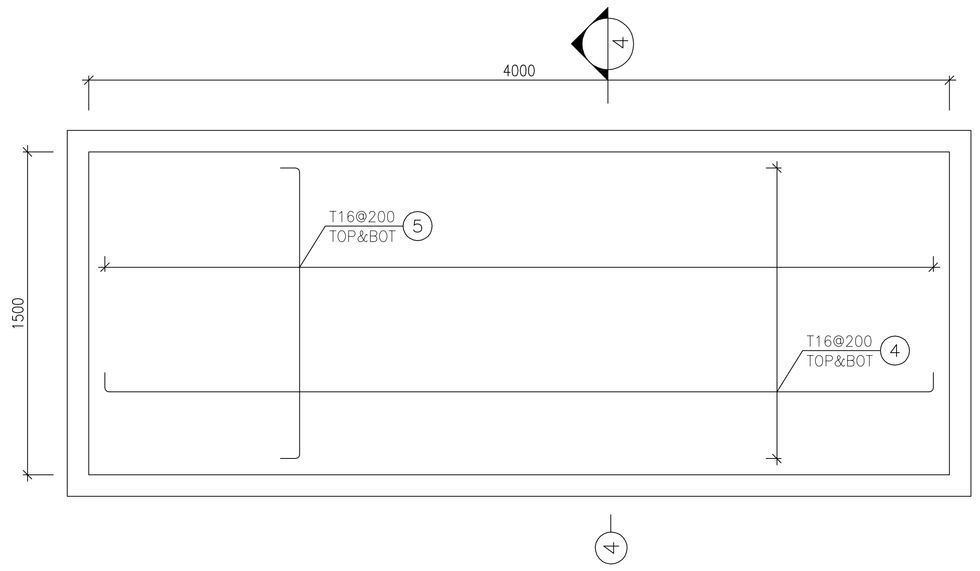

1:20 (2) FOUNDATION REINFORCEMENT PLAN
PIPE SLEEPERS TYPE A (NO. : 11)

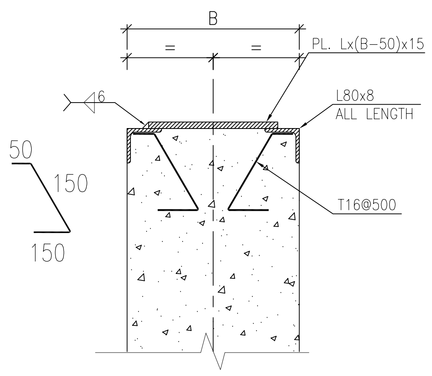

SIDE VIEW

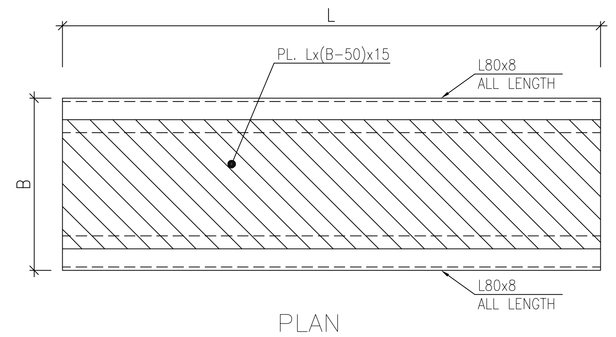

PLAN

N.T.S. (6) DETAIL

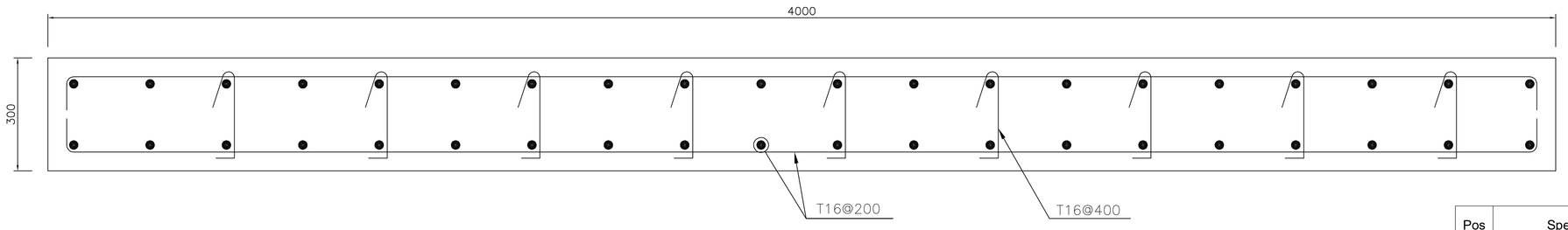

1:10 (5) REINFORCEMENT

Pos	Spec.	Shape	L/A	No.	T16
1	T16	100 200 100	0.400	198	79.200
2	T16	250 4900 250	5.400	198	1069.200
3	T16	250 1700 250	2.200	440	968.000
4	T16	250 4850 250	5.350	496	2653.600
5	T16	250 1350 250	1.850	1612	2982.200
TOTAL LENGTH OR AREA (m/m2)					7752.20
UNIT WEIGHT (Kg)					1.578
WEIGHT (Kg)					12232.97
GRAND TOTAL (Kg)					12233 Kg.

NOTES

1) ALL ELEVATIONS AND COORDINATES ARE IN "m" AND DIMENSIONS ARE IN "mm" UNLESS OTHERWISE NOTED.
2) ALL DIMENSIONS AND ELEVATIONS SHALL BE CHECKED BY THE CONTRACTOR PRIOR TO CONSTRUCTION.
3) 28 DAYS CHARACTERISTIC COMPRESSIVE STRENGTH OF CONCRETE IS 25MPa. (ON CYLINDRICAL SPECIMEN)
4) 28 DAYS CHARACTERISTIC COMPRESSIVE STRENGTH OF LEAN CONCRETE IS 15MPa. (ON CYLINDRICAL SPECIMEN)
5) CONCRETE COVER OVER BARS SHALL BE 75mm FOR FOUNDATION AND 40mm FOR CAST IN-SITU OTHER PARTS.
6) TENSION STRENGTH OF BARS SHALL BE OF MINIMUM Fy=4000 kg/cm^2.
7) UNDERGROUND CONCRETE SHALL BE PROTECTED AND COATED ACCORDING TO RELEVANT SPECIFICATION.
8) CEMENT TYPE II SHALL BE USED ACCORDING TO GEOTECHNICAL REPORT SUGGESTION.
9) FILL MATERIAL SHALL BE COMPACTED TO NOT LESS THAN 95% OF THE MAXIMUM DENSITY AS DETERMINED BY ASTM D-1557 (MODIFIED PROCTOR) METHOD.
10) REINFORCEMENT SHALL BE ADJUSTED LOCALLY TO SUIT THE RECESS OF ANCHOR BOLTS, HOLES AND OTHER EMBEDDED MATERIALS.

LEGEND

T.O.F. TOP OF FOUNDATION
B.O.F. BOTTOM OF FOUNDATION
T.O.G. TOP OF GROUT
H.P.P. HIGH POINT OF PAVING

REINFORCED CONCRETE
LEAN CONCRETE
GROUND

REFERENCE DRAWING	DRG. No.
**********	******

KEY PLAN

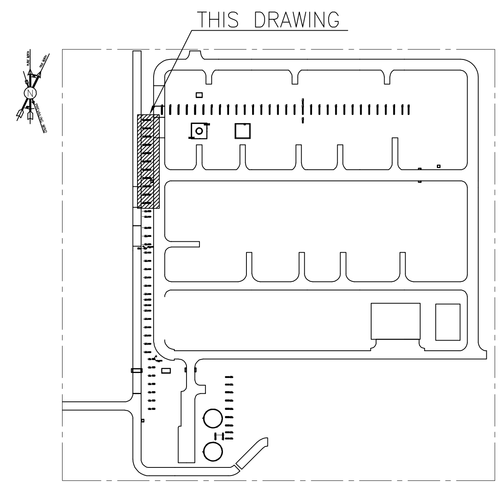

REV.	DESCRIPTION	BY	DATE	BY	DATE
***	**********	**.**	***.****	**.**	***.****
		CHECKED		REV. APPR.	

REV.	DATE	P.O.I.S	PREP.	CHK.	APP.	AUT.
D00	JAN.2023	IFC	R.BERLOUIE	M.FAKHARIAN	M.MEHRSHAD	**.**

PROJECT NAME: BINAK OILFIELD DEVELOPMENT/SURFACE FACILITIES GAS COMPRESSOR STATION

PROJECT NO.: 971020

EPC CONTRACTOR: HIRGAN ENERGY — HIRGAN ENERGY - DESIGN & INSPECTION COMPANIES

EPD/EPC CONTRACTOR (GC): PEDCO — PETROIRAN DEVELOPMENT COMPANY

DRAWING TITLE: FOUNDATION DRAWING FOR COMPRESS AREA SECONDARY SLEEPER

SCALE	SIZE	DRAWING NO.	SHEET NO.	REV.
1:20	A0	BK-GCS-PEPCO-120-ST-DWG-0045	02 OF 03	D00

اصل و کلیه نسخ این نقشه و حق اقتباس متعلق به شرکت ملي مناطق نفت خيز جنوب ميباشد.

THE ORIGINAL AND ALL COPIES OF THIS DRAWING TOGETHER WITH THE COPYRIGHT THEREIN ARE THE SOLE PROPERTY OF N.I.S.O.C./ FIELDS

BINAK OILFIELD DEVELOPMENT
SURFACE FACILITIES
GAS COMPRESSOR STATION

DATE	SCALE	DRAWING BY	CHECKED BY	PROJECT ENG.

NO CONSTRUCTION PERMITTED UNLESS DRAWING APPROVED

APPROVED FOR CONSTRUCTION BY: DATE:

BUDGET REF.	LOCATION	SIZE	CLASS	SERIAL NO.	SHEET	REVISION
053-073-9184	F	4	Q	709182	02	D00

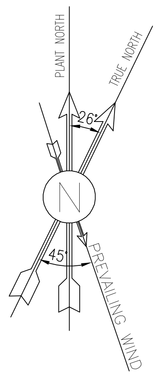

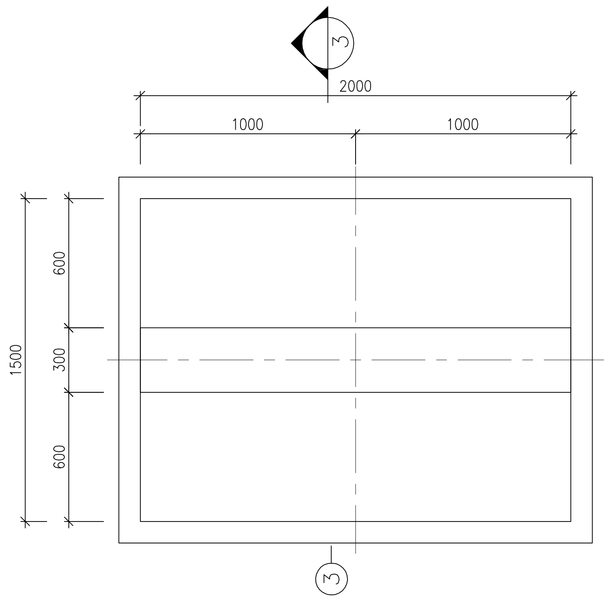

1:20 (1) FOUNDATION FORMWORK PLAN
PIPE SLEEPERS TYPE B (NO. : 27)

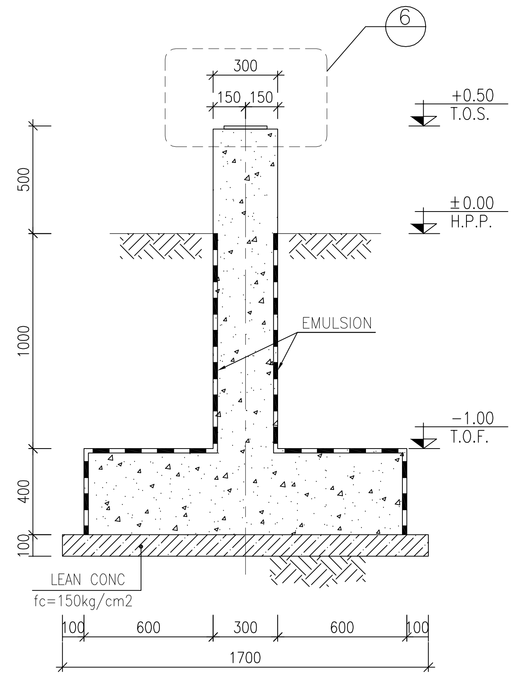

1:20 (3) FORMWORK

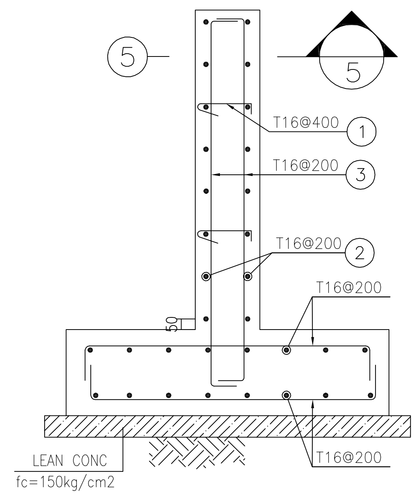

1:20 (4) REINFORCEMENT

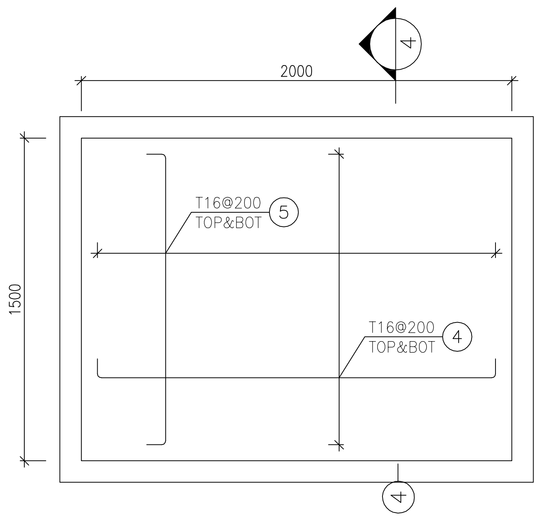

1:20 (3) FOUNDATION REINFORCEMENT PLAN
PIPE SLEEPERS TYPE B (NO. : 27)

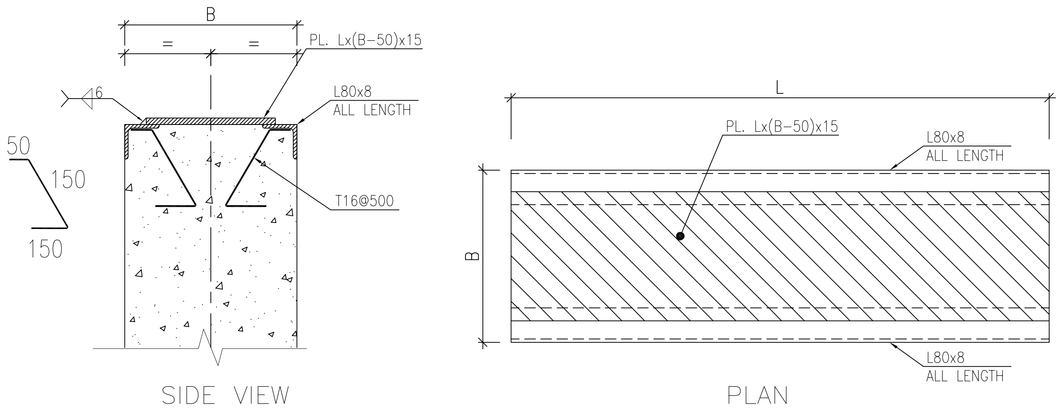

N.T.S. (6) DETAIL

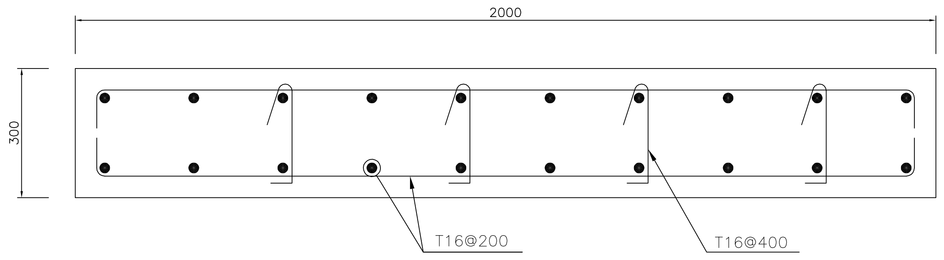

1:10 (5) REINFORCEMENT

Pos	Spec.	Shape	L/A	No.	T16
1	T16	100 200 100	0.400	216	86.400
2	T16	250 4900 250	5.400	486	2624.400
3	T16	250 1700 250	2.200	540	1188.000
4	T16	250 1850 250	2.350	432	1015.200
5	T16	250 1350 250	1.850	594	1098.900
TOTAL LENGTH OR AREA (m/m2)					6012.90
UNIT WEIGHT (Kg)					1.578
WEIGHT (Kg)					9488.36
GRAND TOTAL (Kg)					9488 Kg.

NOTES

1) ALL ELEVATIONS AND COORDINATES ARE IN "m" AND DIMENSIONS ARE IN "mm" UNLESS OTHERWISE NOTED.
2) ALL DIMENSIONS AND ELEVATIONS SHALL BE CHECKED BY THE CONTRACTOR PRIOR TO CONSTRUCTION.
3) 28 DAYS CHARACTERISTIC COMPRESSIVE STRENGTH OF CONCRETE IS 25MPa. (ON CYLINDRICAL SPECIMEN)
4) 28 DAYS CHARACTERISTIC COMPRESSIVE STRENGTH OF LEAN CONCRETE IS 15MPa. (ON CYLINDRICAL SPECIMEN)
5) CONCRETE COVER OVER BARS SHALL BE 75mm FOR FOUNDATION AND 40mm FOR CAST IN-SITU OTHER PARTS.
6) TENSION STRENGTH OF BARS SHALL BE OF MINIMUM Fy=4000 kg/cm^2.
7) UNDERGROUND CONCRETE SHALL BE PROTECTED AND COATED ACCORDING TO RELEVANT SPECIFICATION.
8) CEMENT TYPE II SHALL BE USED ACCORDING TO GEOTECHNICAL REPORT SUGGESTION.
9) FILL MATERIAL SHALL BE COMPACTED TO NOT LESS THAN 95% OF THE MAXIMUM DENSITY AS DETERMINED BY ASTM D-1557 (MODIFIED PROCTOR) METHOD.
10) REINFORCEMENT SHALL BE ADJUSTED LOCALLY TO SUIT THE RECESS OF ANCHOR BOLTS, HOLES AND OTHER EMBEDDED MATERIALS.

LEGEND

T.O.F. TOP OF FOUNDATION
B.O.F. BOTTOM OF FOUNDATION
T.O.G. TOP OF GROUT
H.P.P. HIGH POINT OF PAVING

REINFORCED CONCRETE
LEAN CONCRETE
GROUND

REFERENCE DRAWING	DRG. No.
**********	******

KEY PLAN

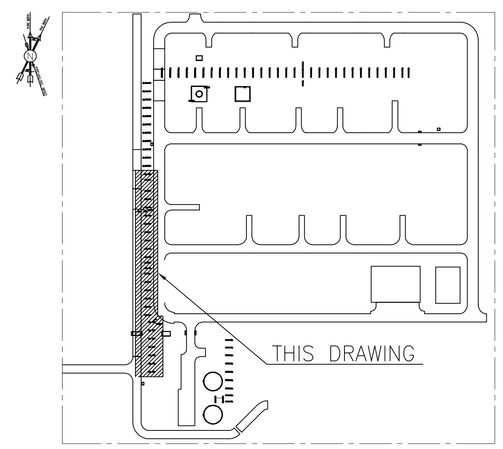

REV.	DATE	P.O.I.S	PREP.	CHK.	APP.	AUT.
D00	JAN.2023	IFC	R.BERLOUIE	M.FAKHARIAN	M.MEHRSHAD	**.**

REV.	DESCRIPTION	CHECKED BY	CHECKED DATE	REV. APPR. BY	REV. APPR. DATE
***	**********	**.**	***.****	**.**	***.****

PROJECT NAME: BINAK OILFIELD DEVELOPMENT/SURFACE FACILITIES GAS COMPRESSOR STATION

PROJECT NO.: 971020

EPC CONTRACTOR: HIRGAN ENERGY – DESIGN & INSPECTION COMPANIES

EPD/EPC CONTRACTOR (GC): PEDCO — PETROIRAN DEVELOPMENT COMPANY

DRAWING TITLE: FOUNDATION DRAWING FOR COMPRESS AREA SECONDARY SLEEPER
FOUNDATION DRAWING FOR COMPRESS AREA MAIN SLEEPER

SCALE	SIZE	DRAWING NO.	SHEET NO.	REV.
1:20	A0	BK-GCS-PEPCO-120-ST-DWG-0045	03 OF 03	D00

اصل و کلیه نسخ این نقشه و حق اقتباس متعلق به شرکت ملی مناطق نفت خیز جنوب میباشد.

THE ORIGINAL AND ALL COPIES OF THIS DRAWING TOGETHER WITH THE COPYRIGHT THEREIN ARE THE SOLE PROPERTY OF N.I.S.O.C./ FIELDS

BINAK OILFIELD DEVELOPMENT
SURFACE FACILITIES
GAS COMPRESSOR STATION

DATE	SCALE	DRAWING BY	CHECKED BY	PROJECT ENG.

NO CONSTRUCTION PERMITTED UNLESS DRAWING APPROVED

APPROVED FOR CONSTRUCTION BY: DATE:

BUDGET REF.	LOCATION	SIZE	CLASS	SERIAL NO.	SHEET	REVISION
053-073-9184	F	4	Q	709182	03	D00