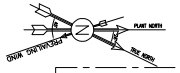

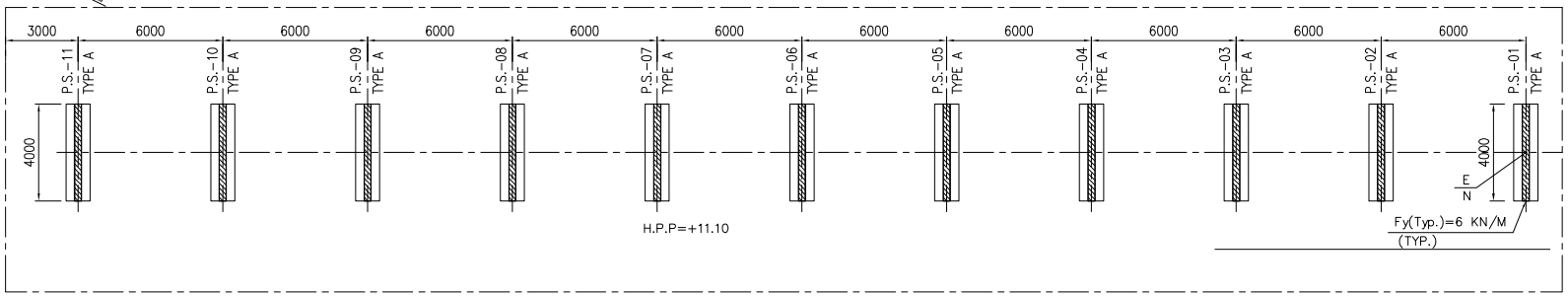

1:100 (1) LOCATION PLAN (PART A)
PIPE SLEEPERS TYPE A (NO. : 11)

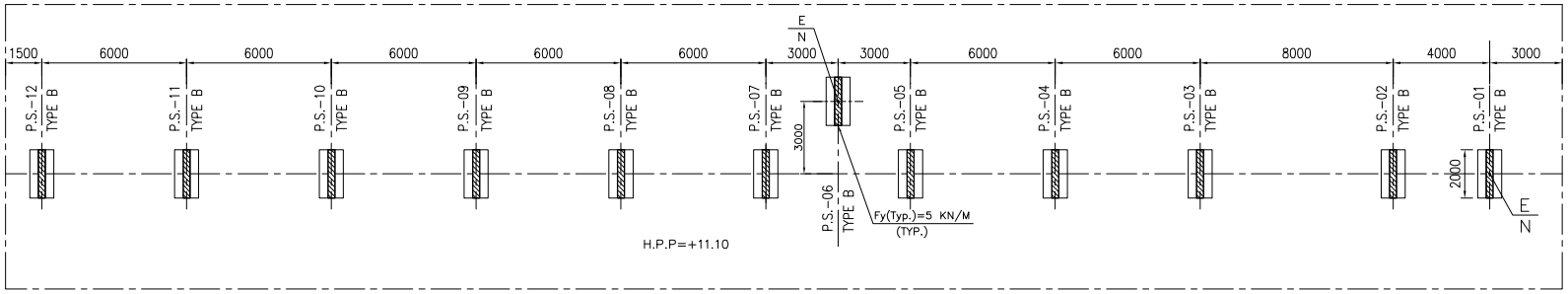

1:100 (2) LOCATION PLAN (PART B)
PIPE SLEEPERS TYPE A (NO. : 27)

D01

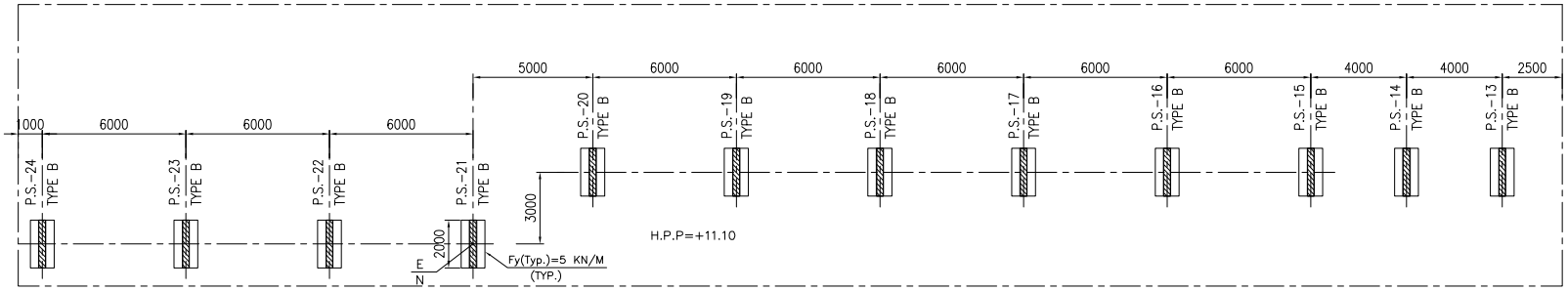

1:100 (2) LOCATION PLAN (PART B)
PIPE SLEEPERS TYPE B (NO. : 27)

D01

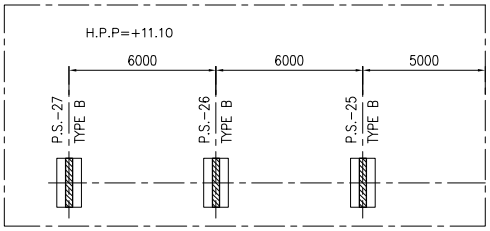

1:100 (2) LOCATION PLAN (PART B)
PIPE SLEEPERS TYPE B (NO. : 27)

D01

NOTES

1) ALL ELEVATIONS AND COORDINATES ARE IN "m" AND DIMENSIONS ARE IN "mm" UNLESS OTHERWISE NOTED.
2) ALL DIMENSIONS AND ELEVATIONS SHALL BE CHECKED BY THE CONTRACTOR PRIOR TO CONSTRUCTION.
3) 28 DAYS CHARACTERISTIC COMPRESSIVE STRENGTH OF CONCRETE IS 30MPa. (ON CYLINDRICAL SPECIMEN)
4) 28 DAYS CHARACTERISTIC COMPRESSIVE STRENGTH OF LEAN CONCRETE IS 15MPa. (ON CYLINDRICAL SPECIMEN)
5) CONCRETE COVER OVER BARS SHALL BE 75mm FOR FOUNDATION AND 40mm FOR CAST IN-SITU OTHER PARTS.
6) TENSION STRENGTH OF BARS SHALL BE OF MINIMUM Fy=4000 kg/cm^2.
7) UNDERGROUND CONCRETE SHALL BE PROTECTED AND COATED ACCORDING TO RELEVANT SPECIFICATION.
8) CEMENT TYPE II SHALL BE USED ACCORDING TO GEOTECHNICAL REPORT SUGGESTION.
9) FILL MATERIAL SHALL BE COMPACTED TO NOT LESS THAN 95% OF THE MAXIMUM DENSITY AS DETERMINED BY ASTM D-1557 (MODIFIED PROCTOR) METHOD.
10) REINFORCEMENT SHALL BE ADJUSTED LOCALLY TO SUIT THE RECESS OF ANCHOR BOLTS, HOLES AND OTHER EMBEDDED MATERIALS.
11) SHOULD BE USED THE EMULSION ON CONCRETE EXPOSED WITH SOIL. B-90-COAT.M.E IS A BITUMEN-BASED ONE-COMPONENT EMULSION PROTECTIVE COATING TO PREVENT THE PENETRATION OF DESTRUCTIVE SALTS & IONS. THIS MATERIAL IS CONTROLLED ACCORDING TO THE FOLLOWING STANDARDS: ASTM D1227, ASTM D2939, ASTM D1640

D01

LEGEND

G.L.	GROUND LEVEL
T.O.F.	TOP OF FOUNDATION
B.O.F.	BOTTOM OF FOUNDATION
T.O.G.	TOP OF GROUT
~~H.P.P.~~	~~HIGH POINT OF PAVING~~
T.O.S.	TOP OF STEEL
~~B.O.L.C.~~	~~BOTTOM OF LEAN CONCRETE~~

REINFORCED CONCRETE
LEAN CONCRETE
GROUND

D01

REFERENCE DRAWING	DRG. No.
STANDARD DRAWING FOR EMBED PLATES IN CONCRETE	BK-GENAL-PEDCO-000-ST-DW-0007
GENERAL NOTES - REINFORCED CONCRETE STRUCTURES	BK-GENAL-PEDCO-000-ST-DW-0012
STANDARD PIPE SUPPORT DRAWINGS	BK-GCS-PEDCO-120-PI-DW-0001
UNIT PLOT PLAN DRAWING	BK-GCS-PEDCO-120-PI-DW-0001

D01

KEY PLAN

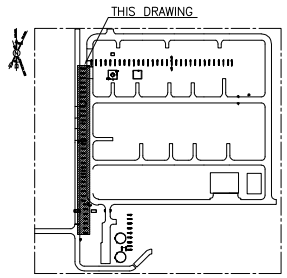

REV.	DATE	P.O.I.S	PREP.	CHK.	APP.	AUT.
D01	MAR.2023	IFA	R.BERLOUIE	M.FAKHARAN	M.MIRSHRIAD	**.**
D00	JAN.2023	IFC	R.BERLOUIE	M.FAKHARAN	M.MIRSHRIAD	**.**

REV.	DESCRIPTION	CHECKED BY	CHECKED DATE	REV. APPR. BY	REV. APPR. DATE
***	**********	**.**	***.****	**.**	***.****

PROJECT NAME: BINAK OILFIELD DEVELOPMENT/SURFACE FACILITIES GAS COMPRESSOR STATION

PROJECT NO.: 971020

EPC CONTRACTOR: HIRGAN ENERGY – DESIGN & INSPECTION COMPANIES

EPD/EPC CONTRACTOR (GC): PETROIRAN DEVELOPMENT COMPANY — PEDCO

اصل و کلیه نسخ این نقشه و حق اقتباس متعلق به شرکت ملی مناطق نفت خیز جنوب میباشد.

THE ORIGINAL AND ALL COPIES OF THIS DRAWING TOGETHER WITH THE COPYRIGHT THEREIN ARE THE SOLE PROPERTY OF N.I.S.O.C./ FIELDS

BINAK OILFIELD DEVELOPMENT
SURFACE FACILITIES
GAS COMPRESSOR STATION

DATE	SCALE	DRAWING BY	CHECKED BY	PROJECT ENG.

DRAWING TITLE: FOUNDATION DRAWING FOR COMPRESSOR AREA SECONDARY SLEEPERS

NO CONSTRUCTION PERMITTED UNLESS DRAWING APPROVED

APPROVED FOR CONSTRUCTION BY: DATE:

SCALE	SIZE	DRAWING NO.	SHEET NO.	REV.	BUDGET REF.	LOCATION	SIZE	CLASS	SERIAL NO.	SHEET	REVISION
1:20	A0	BK-GCS-PEPCO-120-ST-DW-0045	01 OF 05	D01	053-073-9184	F	4	Q	709182	01	D01

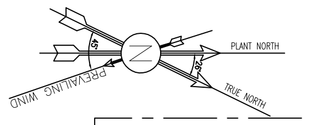

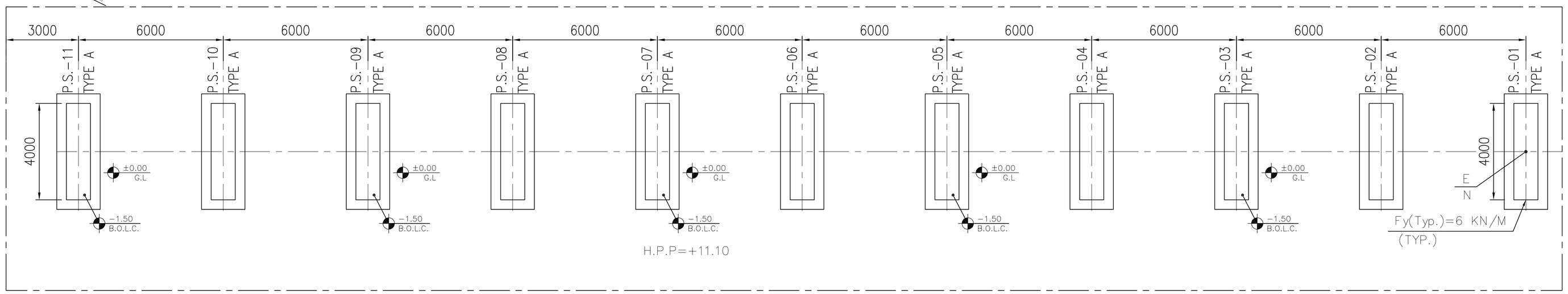

1:100 (1) EXCAVATION ELEVATION (PART A)
PIPE SLEEPERS TYPE A (NO. : 11)

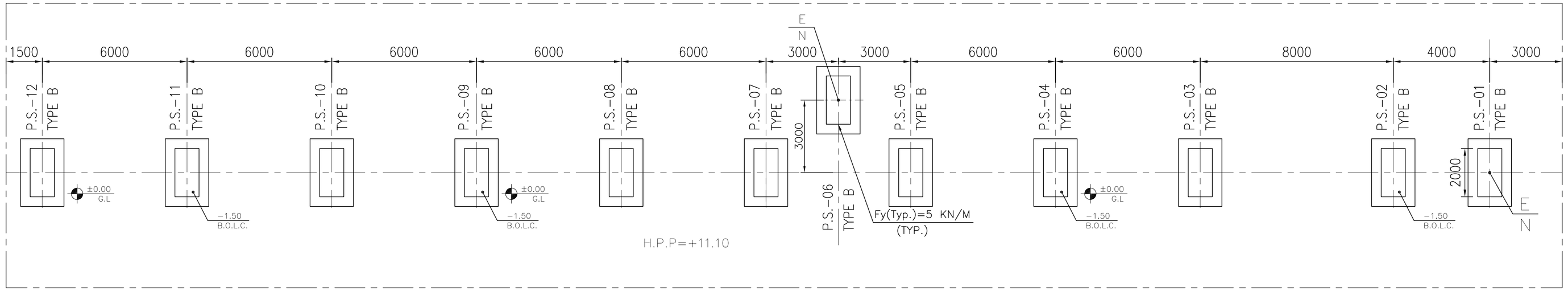

1:100 (2) EXCAVATION ELEVATION (PART B)
PIPE SLEEPERS TYPE A (NO. : 27)

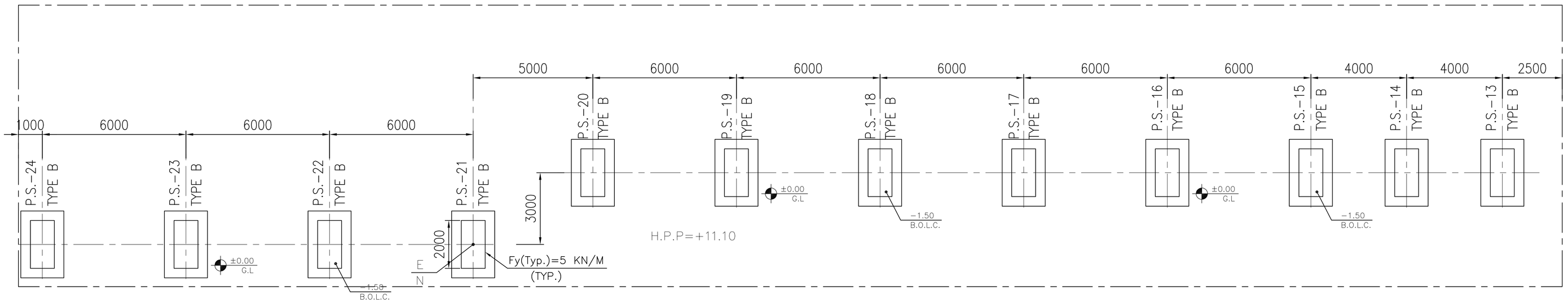

1:100 (2) EXCAVATION ELEVATION (PART B)
PIPE SLEEPERS TYPE B (NO. : 27)

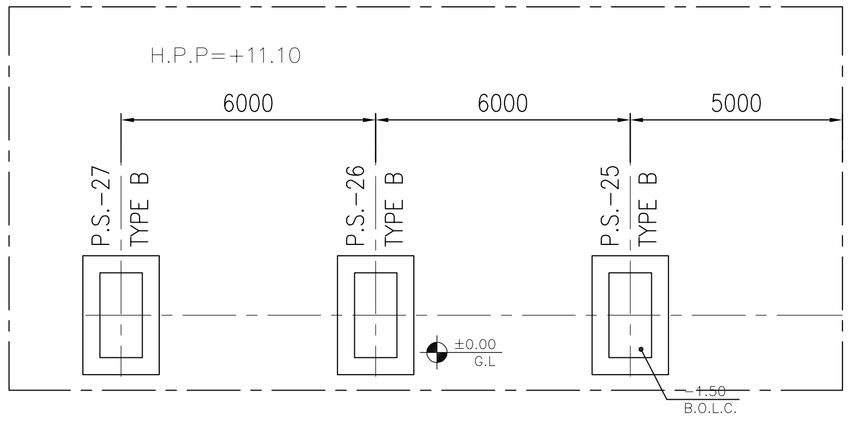

1:100 (2) EXCAVATION ELEVATION (PART B)
PIPE SLEEPERS TYPE B (NO. : 27)

NOTES

1) ALL ELEVATIONS AND COORDINATES ARE IN "m" AND DIMENSIONS ARE IN "mm" UNLESS OTHERWISE NOTED.
2) ALL DIMENSIONS AND ELEVATIONS SHALL BE CHECKED BY THE CONTRACTOR PRIOR TO CONSTRUCTION.
3) 28 DAYS CHARACTERISTIC COMPRESSIVE STRENGTH OF CONCRETE IS 30MPa. (ON CYLINDRICAL SPECIMEN)
4) 28 DAYS CHARACTERISTIC COMPRESSIVE STRENGTH OF LEAN CONCRETE IS 15MPa. (ON CYLINDRICAL SPECIMEN)
5) CONCRETE COVER OVER BARS SHALL BE 75mm FOR FOUNDATION AND 40mm FOR CAST IN-SITU OTHER PARTS.
6) TENSION STRENGTH OF BARS SHALL BE OF MINIMUM Fy=4000 kg/cm^2.
7) UNDERGROUND CONCRETE SHALL BE PROTECTED AND COATED ACCORDING TO RELEVANT SPECIFICATION.
8) CEMENT TYPE II SHALL BE USED ACCORDING TO GEOTECHNICAL REPORT SUGGESTION.
9) FILL MATERIAL SHALL BE COMPACTED TO NOT LESS THAN 95% OF THE MAXIMUM DENSITY AS DETERMINED BY ASTM D-1557 (MODIFIED PROCTOR) METHOD.
10) REINFORCEMENT SHALL BE ADJUSTED LOCALLY TO SUIT THE RECESS OF ANCHOR BOLTS, HOLES AND OTHER EMBEDDED MATERIALS.
11) SHOULD BE USED THE EMULSION ON CONCRETE EXPOSED WITH SOIL.
B-90-COAT.M.E IS A BITUMEN-BASED ONE-COMPONENT EMULSION PROTECTIVE
COATING TO PREVENT THE PENETRATION OF DESTRUCTIVE SALTS & IONS.
THIS MATERIAL IS CONTROLLED ACCORDING TO THE FOLLOWING STANDARDS: ASTM D1227, ASTM D2939, ASTM D1640

LEGEND

G.L.	GROUND LEVEL
T.O.F.	TOP OF FOUNDATION
B.O.F.	BOTTOM OF FOUNDATION
T.O.G.	TOP OF GROUT
H.P.P.	HIGH POINT OF PAVING
T.O.S.	TOP OF STEEL
B.O.L.C.	BOTTOM OF LEAN CONCRETE
	REINFORCED CONCRETE
	LEAN CONCRETE
	GROUND

REFERENCE DRAWING	DRG. No.
STANDARD DRAWING FOR INSERT PLATES IN CONCRETE	BK-GNRAL-PEDCO-000-ST-DW-0007
GENERAL NOTES - REINFORCED CONCRETE STRUCTURES	BK-GNRAL-PEDCO-000-ST-DW-0012
STANDARD PIPE SUPPORT DRAWINGS	BK-GCS-PEDCO-120-PI-DW-0001
UNIT PLOT PLAN DRAWING	BK-GCS-PEDCO-120-PI-PY-0001

KEY PLAN

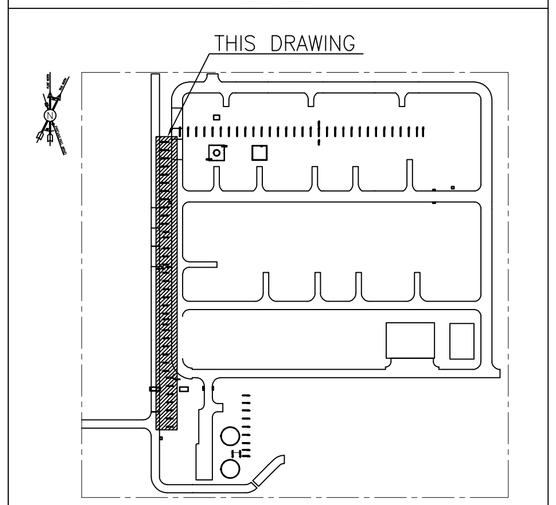

REV.	DESCRIPTION	BY	DATE	BY	DATE
***	**********	**.**	***.****	**.**	***.****
		CHECKED		REV. APPR.	

REV.	DATE	P.O.I.S	PREP.	CHK.	APP.	AUT.
D01	MAR.2023	IFA	R.BERLOUIE	M.FAKHARIAN	M.MEHRSHAD	**.**
D00	JAN.2023	IFC	R.BERLOUIE	M.FAKHARIAN	M.MEHRSHAD	**.**

PROJECT NAME: BINAK OILFIELD DEVELOPMENT/SURFACE FACILITIES GAS COMPRESSOR STATION

PROJECT NO.: 971020

EPC CONTRACTOR: HIRGAN ENERGY - DESIGN & INSPECTION COMPANIES

EPD/EPC CONTRACTOR (GC): PETROIRAN DEVELOPMENT COMPANY (PEDCO)

DRAWING TITLE: FOUNDATION DRAWING FOR COMPRESSOR AREA SECONDARY SLEEPERS

اصل و کلیه نسخ این نقشه و حق اقتباس متعلق به شرکت ملی مناطق نفت خیز جنوب میباشد.
THE ORIGINAL AND ALL COPIES OF THIS DRAWING TOGETHER WITH THE COPYRIGHT THEREIN ARE THE SOLE PROPERTY OF N.I.S.O.C./ FIELDS

BINAK OILFIELD DEVELOPMENT
SURFACE FACILITIES
GAS COMPRESSOR STATION

DATE	SCALE	DRAWING BY	CHECKED BY	PROJECT ENG.

NO CONSTRUCTION PERMITTED UNLESS DRAWING APPROVED

APPROVED FOR CONSTRUCTION | BY: | DATE:

SCALE	SIZE	DRAWING NO.	SHEET NO.	REV.	BUDGET REF.	LOCATION	SIZE	CLASS	SERIAL NO.	SHEET	REVISION
1:20	A0	BK-GCS-PEPCO-120-ST-DW-0045	02 OF 05	D01	053-073-9184	F	4	Q	709182	01	D01

PIPE SLEEPERS LOCATION TABLE

ITEM	TYPE	COORDINATES		T.O.PED
		E (m)	N (m)	
P.S.-01	A	505000	680000	+0.50
P.S.-02	A	505000	674000	+0.50
P.S.-03	A	505000	668000	+0.50
P.S.-04	A	505000	662000	+0.50
P.S.-05	A	505000	656000	+0.50
P.S.-06	A	505000	650000	+0.50
P.S.-07	A	505000	656000	+0.50
P.S.-08	A	505000	638000	+0.50
P.S.-09	A	505000	632000	+0.50
P.S.-10	A	505000	626000	+0.50
P.S.-11	A	505000	620000	+0.50
P.S.-01	B	506000	614000	+0.50
P.S.-02	B	506000	610000	+0.50
P.S.-03	B	506000	602000	+0.50
P.S.-04	B	506000	596000	+0.50
P.S.-05	B	506000	590000	+0.50
P.S.-06	B	503000	587000	+0.50
P.S.-07	B	506000	584000	+0.50
P.S.-08	B	506000	578000	+0.50
P.S.-09	B	506000	572000	+0.50
P.S.-10	B	506000	566000	+0.50

PIPE SLEEPERS LOCATION TABLE

ITEM	TYPE	COORDINATES		T.O.PED
		E (m)	N (m)	
P.S.-11	B	506000	560000	+0.50
P.S.-12	B	506000	554000	+0.50
P.S.-13	B	506000	550000	+0.50
P.S.-14	B	506000	546000	+0.50
P.S.-15	B	506000	542000	+0.50
P.S.-16	B	506000	536000	+0.50
P.S.-17	B	506000	530000	+0.50
P.S.-18	B	506000	524000	+0.50
P.S.-19	B	506000	518000	+0.50
P.S.-20	B	506000	512000	+0.50
P.S.-21	B	509000	507000	+0.50
P.S.-22	B	509000	501000	+0.50
P.S.-23	B	509000	495000	+0.50
P.S.-24	B	509000	489000	+0.50
P.S.-25	B	509000	483000	+0.50
P.S.-26	B	509000	477000	+0.50
P.S.-27	B	509000	471000	+0.50

NOTES

1) ALL ELEVATIONS AND COORDINATES ARE IN "m" AND DIMENSIONS ARE IN "mm" UNLESS OTHERWISE NOTED.
2) ALL DIMENSIONS AND ELEVATIONS SHALL BE CHECKED BY THE CONTRA PRIOR TO CONSTRUCTION.
3) 28 DAYS CHARACTERISTIC COMPRESSIVE STRENGTH OF CONCRETE IS 30M (ON CYLINDRICAL SPECIMEN)
4) 28 DAYS CHARACTERISTIC COMPRESSIVE STRENGTH OF LEAN CONCRETE IS 1 (ON CYLINDRICAL SPECIMEN)
5) CONCRETE COVER OVER BARS SHALL BE 75mm FOR FOUNDATION A 40mm FOR CAST IN-SITU OTHER PARTS.
6) TENSION STRENGTH OF BARS SHALL BE OF MINIMUM Fy=4000
7) UNDERGROUND CONCRETE SHALL BE PROTECTED AND COATED ACCORD TO RELEVANT SPECIFICATION.
8) CEMENT TYPE II SHALL BE USED ACCORDING TO GEOTECHNICAL REPORT SUGGESTION.
9) FILL MATERIAL SHALL BE COMPACTED TO NOT LESS THAN 95% THE MAXIMUM DENSITY AS DETERMINED BY ASTM D-1557 (MODIFIED PROCTOR) METHOD.
10) REINFORCEMENT SHALL BE ADJUSTED LOCALLY TO SUIT THE OF ANCHOR BOLTS, HOLES AND OTHER EMBEDDED MATERIALS
11) SHOULD BE USED THE EMULSION ON CONCRETE EXPOSED WI B-90-COAT.M.E IS A BITUMEN-BASED ONE-COMPONENT EMULSION PROTECTIVE COATING TO PREVENT THE PENETRATION OF DESTRUCTIVE SALTS & THIS MATERIAL IS CONTROLLED ACCORDING TO THE FOLLOWING STAN ASTM D1227, ASTM D2939, ASTM D1640

LEGEND

G.L.	GROUND LEVEL
T.O.F.	TOP OF FOUNDATION
B.O.F.	BOTTOM OF FOUNDATION
T.O.G.	TOP OF GROUT
H.P.P.	HIGH POINT OF PAVING
T.O.S.	TOP OF STEEL
B.O.L.C.	BOTTOM OF LEAN CONCRETE

REINFORCED CONCRETE

LEAN CONCRETE

GROUND

REFERENCE DRAWING	DRG. No.
STANDARD DRAWING FOR INSERT PLATES IN CONCRETE	BK-GNRAL-PEDCO-000-ST
GENERAL NOTES - REINFORCED CONCRETE STRUCTURES	BK-GNRAL-PEDCO-000-ST
STANDARD PIPE SUPPORT DRAWINGS	BK-GCS-PEDCO-120-PI-D
UNIT PLOT PLAN DRAWING	BK-GCS-PEDCO-120-PI-F

KEY PLAN

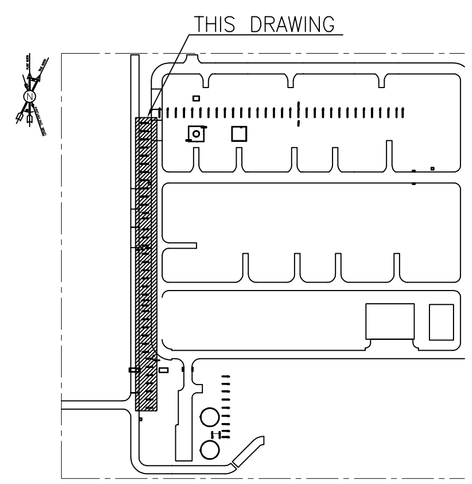

REV.	DATE	P.O.I.S	PREP.	CHK.	APP.	AUT.
D01	MAR.2023	IFA	R.BERLOUIE	M.FAKHARIAN	M.MEHRSHAD	**.**
D00	JAN.2023	IFC	R.BERLOUIE	M.FAKHARIAN	M.MEHRSHAD	**.**

REV.	DESCRIPTION	BY	DATE	BY
***	**********	**.**	***.****	**.**

CHECKED REV. AP

PROJECT NAME: BINAK OILFIELD DEVELOPMENT/SURFACE FACILITIES GAS COMPRESSOR STATION

PROJECT NO.: 971020

EPC CONTRACTOR: HIRGAN ENERGY - DESIGN & INSPECTION COMPANIES

EPD/EPC CONTRACTOR (GC): PEDCO — PETROIRAN DEVELOPMENT COMPANY

DRAWING TITLE: FOUNDATION DRAWING FOR COMPRESSOR AREA SECONDARY SLEEPERS

و کلیه نسخ این نقشه و حق اقتباس متعلق به شرکت ملی مناطق نفت خیز جنوب میباشد.

THE ORIGINAL AND ALL COPIES OF THIS DRAWING TOGETHER THE COPYRIGHT THEREIN ARE THE SOLE PROPERTY OF N.I.S.O.C./ FIELDS

BINAK OILFIELD DEVELOPMENT
SURFACE FACILITIES
GAS COMPRESSOR STATION

DATE	SCALE	DRAWING BY	CHECKED BY	PROJE

NO CONSTRUCTION PERMITTED UNLESS DRAWING APPROVE

APPROVED FOR CONSTRUCTION BY: DATE:

SCALE	SIZE	DRAWING NO.	SHEET NO.	REV.	BUDGET REF.	LOCATION	SIZE	CLASS	SERIAL NO.	SHEET
1:20	A0	BK-GCS-PEPCO-120-ST-DW-0045	03 OF 05	D01	053-073-9184	F	4	Q	709182	02

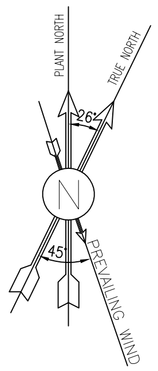

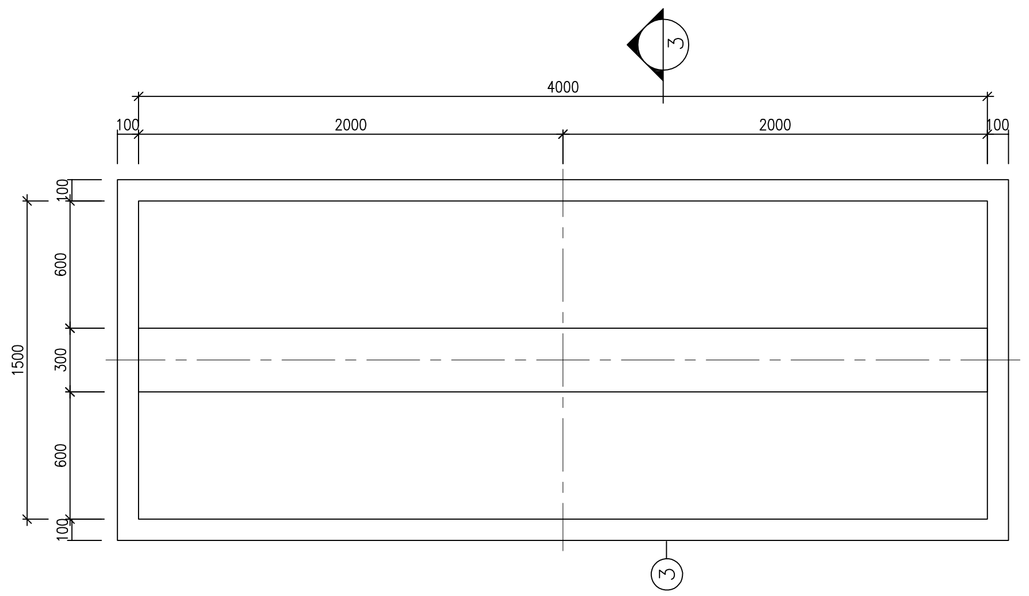

1:20 (1) FOUNDATION FORMWORK PLAN
PIPE SLEEPERS TYPE A (NO. : 11)

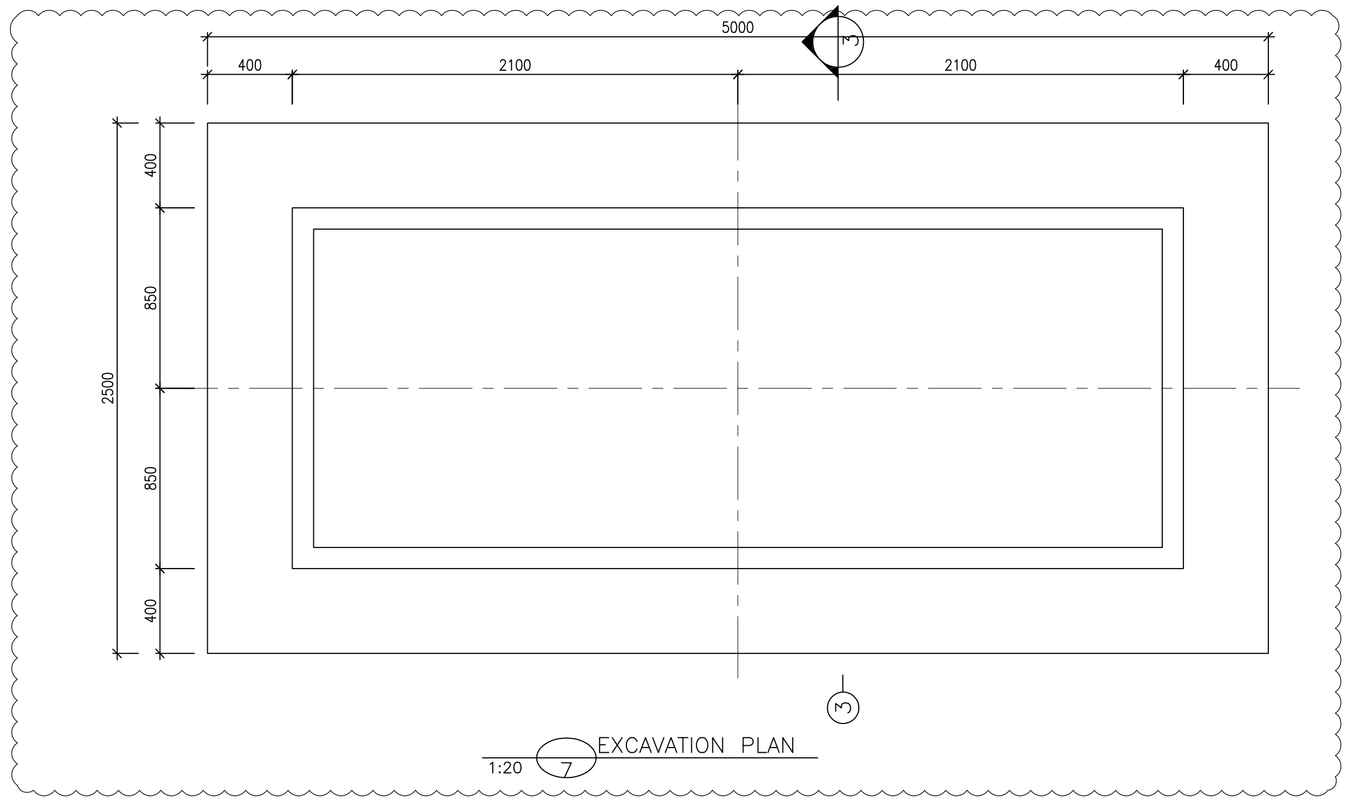

1:20 (7) EXCAVATION PLAN

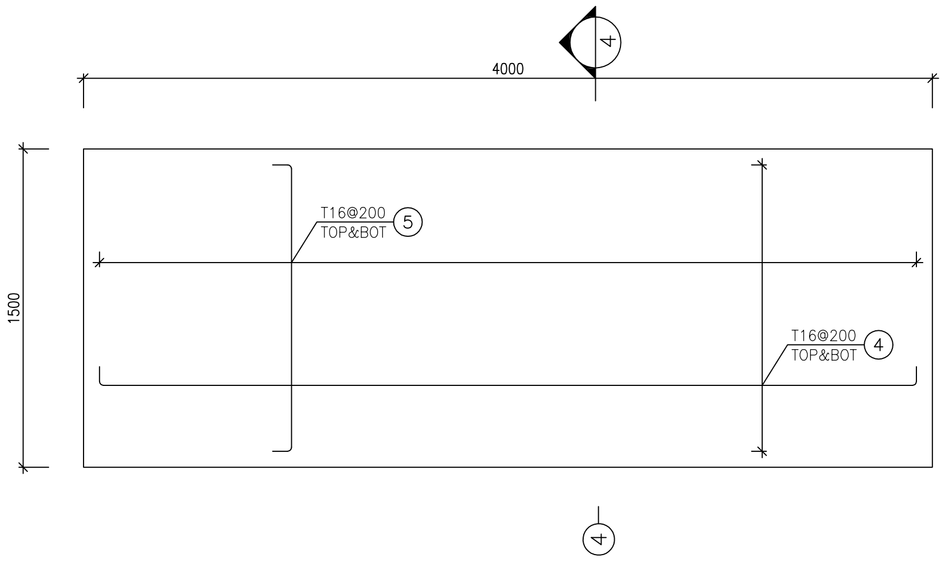

1:20 (2) FOUNDATION REINFORCEMENT PLAN
PIPE SLEEPERS TYPE A (NO. : 11)

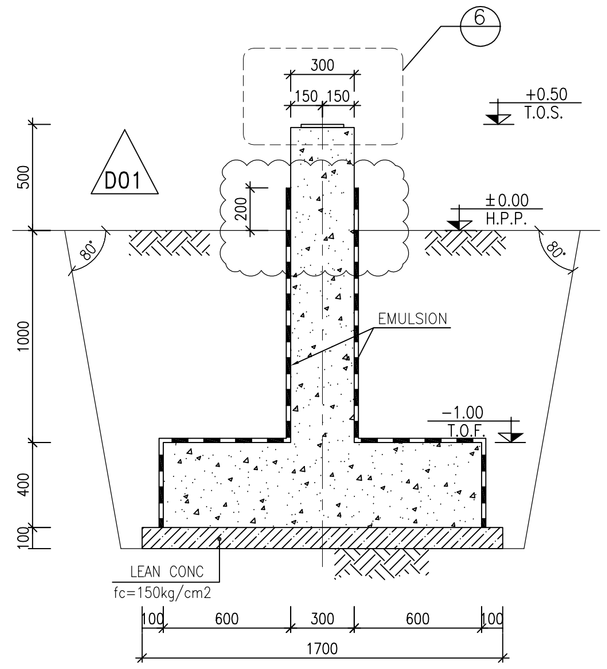

1:20 (3) FORMWORK

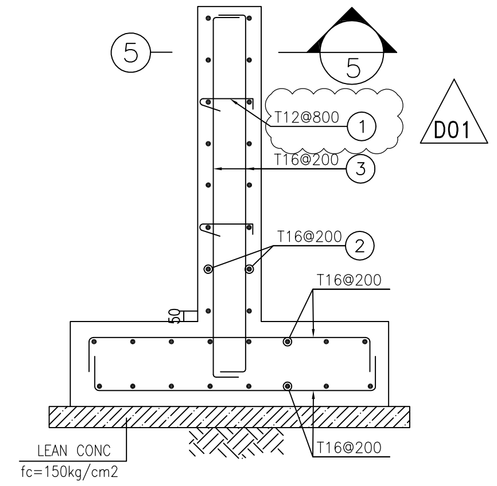

1:20 (4) REINFORCEMENT

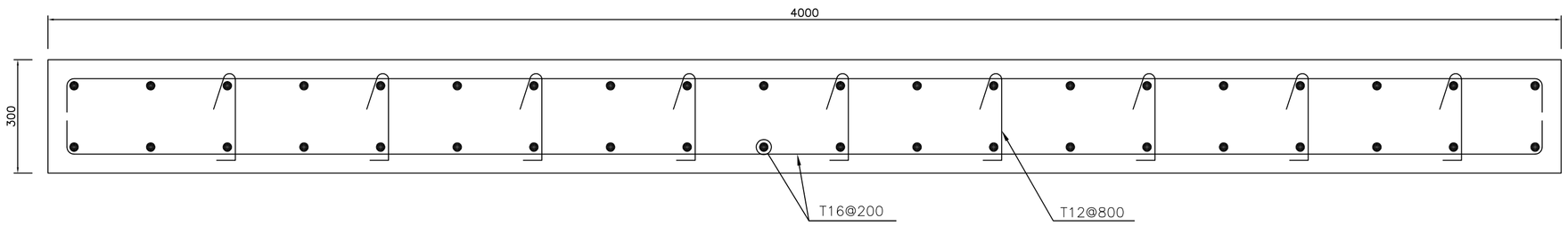

1:10 (5) REINFORCEMENT

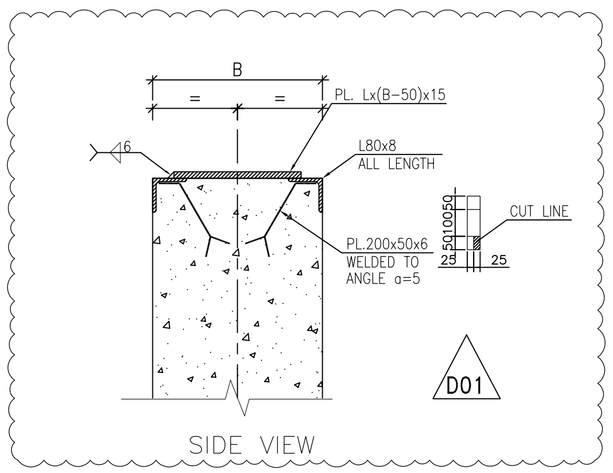

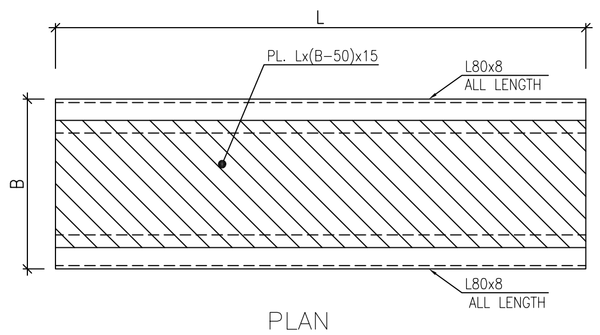

N.T.S. (6) DETAIL

Pos	Spec.	Shape	L/A	No.	T12	T16
1	T12	100 / 200 / 100	0.400	100	40.00	–
2	T16	250 / 4900 / 250	5.400	198	–	1069.200
3	T16	250 / 1700 / 250	2.200	440	–	968.000
4	T16	250 / 4850 / 250	5.350	496	–	2653.600
5	T16	250 / 1350 / 250	1.850	1612	–	2982.200
TOTAL LENGTH OR AREA (m/m2)					40.00	7673.00
UNIT WEIGHT (Kg)					0.888	1.578
WEIGHT (Kg)					35.52	12108.00
GRAND TOTAL (Kg)					~12150.00Kg.	

NOTES

1) ALL ELEVATIONS AND COORDINATES ARE IN "m" AND DIMENSIONS ARE IN "mm" UNLESS OTHERWISE NOTED.
2) ALL DIMENSIONS AND ELEVATIONS SHALL BE CHECKED BY THE CONTRA PRIOR TO CONSTRUCTION.
3) 28 DAYS CHARACTERISTIC COMPRESSIVE STRENGTH OF CONCRETE IS 30N (ON CYLINDRICAL SPECIMEN)
4) 28 DAYS CHARACTERISTIC COMPRESSIVE STRENGTH OF LEAN CONCRETE IS 1 (ON CYLINDRICAL SPECIMEN)
5) CONCRETE COVER OVER BARS SHALL BE 75mm FOR FOUNDATION A 40mm FOR CAST IN-SITU OTHER PARTS.
6) TENSION STRENGTH OF BARS SHALL BE OF MINIMUM Fy=4000
7) UNDERGROUND CONCRETE SHALL BE PROTECTED AND COATED ACCORD TO RELEVANT SPECIFICATION.
8) CEMENT TYPE II SHALL BE USED ACCORDING TO GEOTECHNICAL REPORT SUGGESTION.
9) FILL MATERIAL SHALL BE COMPACTED TO NOT LESS THAN 95% THE MAXIMUM DENSITY AS DETERMINED BY ASTM D-1557 (MODIFIED PROCTOR) METHOD.
10) REINFORCEMENT SHALL BE ADJUSTED LOCALLY TO SUIT THE I OF ANCHOR BOLTS, HOLES AND OTHER EMBEDDED MATERIALS
11) SHOULD BE USED THE EMULSION ON CONCRETE EXPOSED WI B-90-COAT.M.E IS A BITUMEN-BASED ONE-COMPONENT EMULSION PROTECTIVE COATING TO PREVENT THE PENETRATION OF DESTRUCTIVE SALTS & THIS MATERIAL IS CONTROLLED ACCORDING TO THE FOLLOWING STAN ASTM D1227, ASTM D2939, ASTM D1640

LEGEND

G.L.	GROUND LEVEL
T.O.F.	TOP OF FOUNDATION
B.O.F.	BOTTOM OF FOUNDATION
T.O.G.	TOP OF GROUT
H.P.P.	HIGH POINT OF PAVING
T.O.S.	TOP OF STEEL
B.O.L.C.	BOTTOM OF LEAN CONCRETE

REINFORCED CONCRETE
LEAN CONCRETE
GROUND

REFERENCE DRAWING	DRG. No.
STANDARD DRAWING FOR INSERT PLATES IN CONCRETE	BK-GNRAL-PEDCO-000-ST
GENERAL NOTES - REINFORCED CONCRETE STRUCTURES	BK-GNRAL-PEDCO-000-ST
STANDARD PIPE SUPPORT DRAWINGS	BK-GCS-PEDCO-120-PI-D
UNIT PLOT PLAN DRAWING	BK-GCS-PEDCO-120-PI-P

KEY PLAN

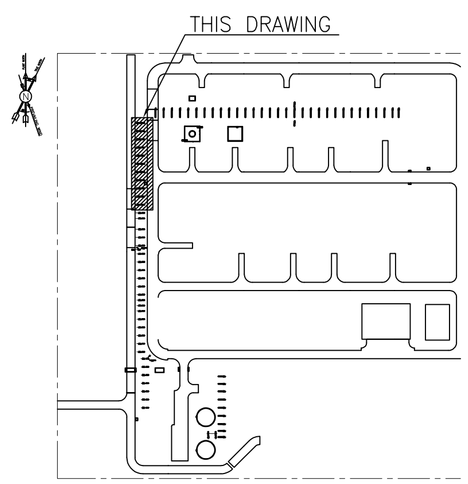

REV.	DATE	P.O.I.S	PREP.	CHK.	APP.	AUT.
D01	MAR.2023	IFA	R.BERLOUIE	M.FAKHARIAN	M.MEHRSHAD	**.**
D00	JAN.2023	IFC	R.BERLOUIE	M.FAKHARIAN	M.MEHRSHAD	**.**

REV.	DESCRIPTION	BY	DATE	BY	
		CHECKED		REV.	AP
***	**********	**.**	***.****	**.**	

PROJECT NAME: BINAK OILFIELD DEVELOPMENT/SURFACE FACILITIES GAS COMPRESSOR STATION

PROJECT NO.: 971020

EPC CONTRACTOR: HIRGAN ENERGY - DESIGN & INSPECTION COMPANIES

EPD/EPC CONTRACTOR (GC): PEDCO — PETROIRAN DEVELOPMENT COMPANY

DRAWING TITLE: FOUNDATION DRAWING FOR COMPRESSOR AREA SECONDARY SLEEPERS

SCALE	SIZE	DRAWING NO.	SHEET NO.	REV.
1:20	A0	BK-GCS-PEPCO-120-ST-DW-0045	04 OF 05	D01

و کلیه نسخ این نقشه و حق اقتباس متعلق به شرکت ملی مناطق نفت خیز جنوب میباشد.
THE ORIGINAL AND ALL COPIES OF THIS DRAWING TOGETHER THE COPYRIGHT THEREIN ARE THE SOLE PROPERTY OF N.I.S.O.C./ FIELDS

BINAK OILFIELD DEVELOPMENT
SURFACE FACILITIES
GAS COMPRESSOR STATION

DATE	SCALE	DRAWING BY	CHECKED BY	PROJE

NO CONSTRUCTION PERMITTED UNLESS DRAWING APPROVE

APPROVED FOR CONSTRUCTION | BY: | DATE:

BUDGET REF.	LOCATION	SIZE	CLASS	SERIAL NO.	SHEET	R
053-073-9184	F	4	Q	709182	03	

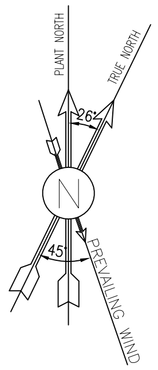

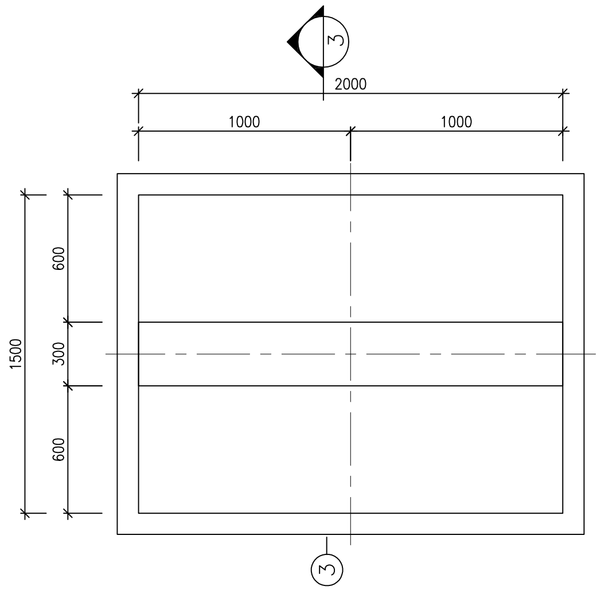

1:20 (1) FOUNDATION FORMWORK PLAN
PIPE SLEEPERS TYPE B (NO. : 27)

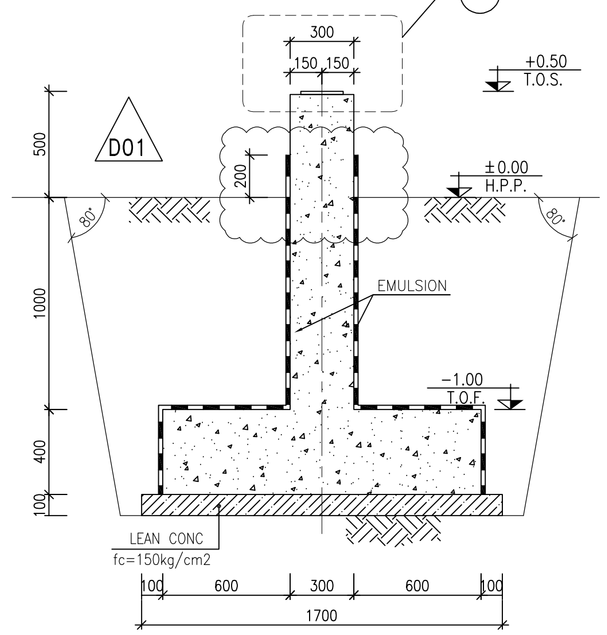

1:20 (3) FORMWORK

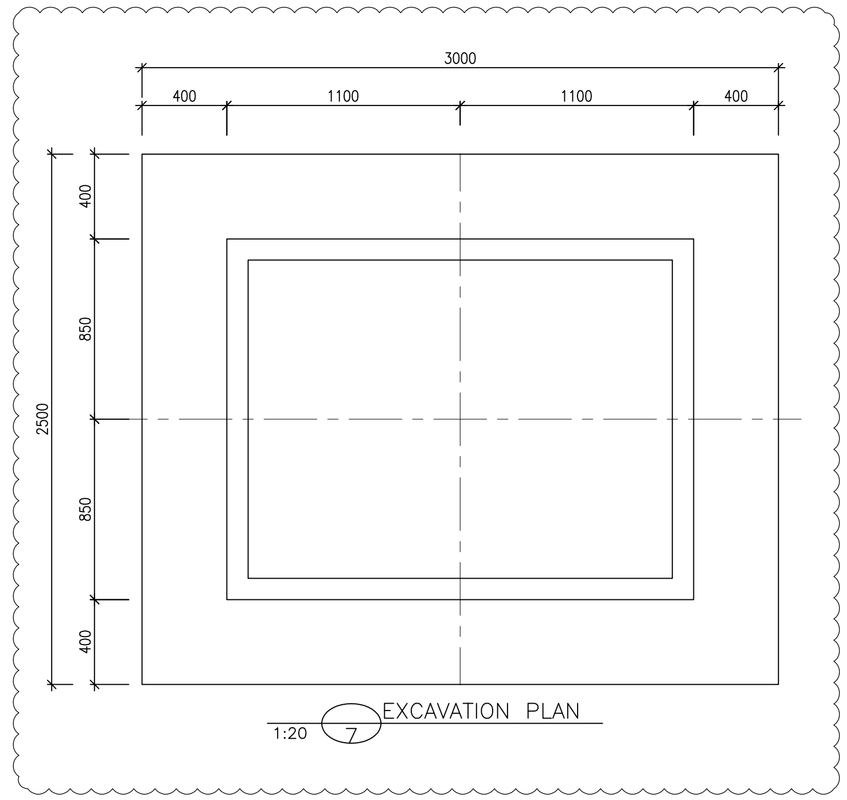

1:20 (7) EXCAVATION PLAN

D01

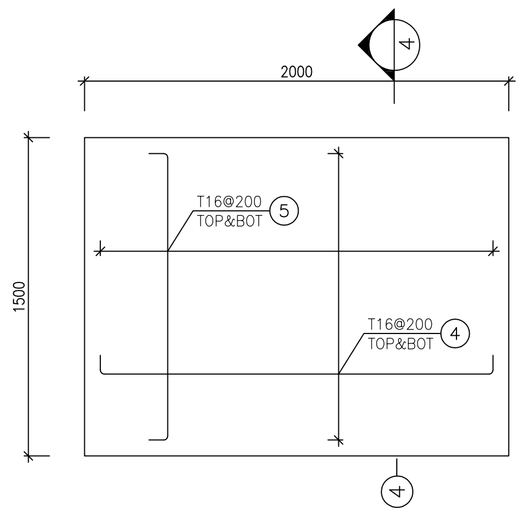

1:20 (3) FOUNDATION REINFORCEMENT PLAN
PIPE SLEEPERS TYPE B (NO. : 27)

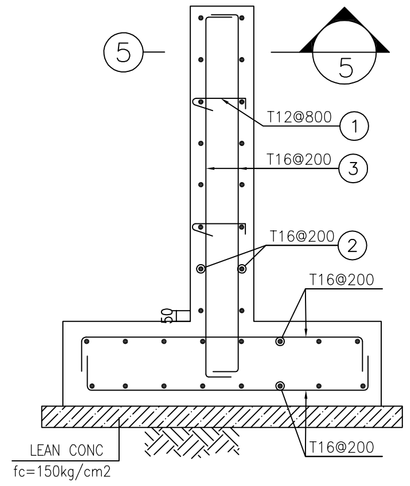

1:20 (4) REINFORCEMENT

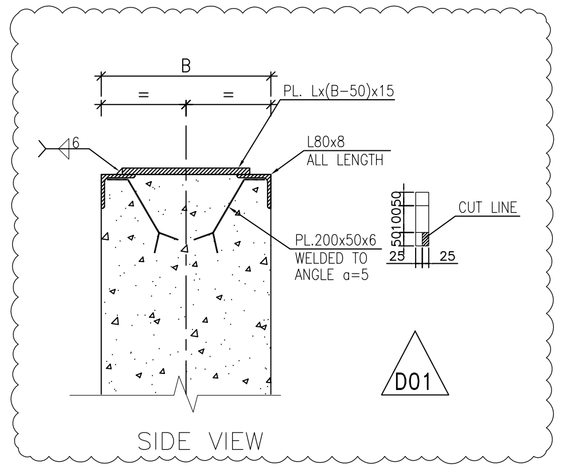

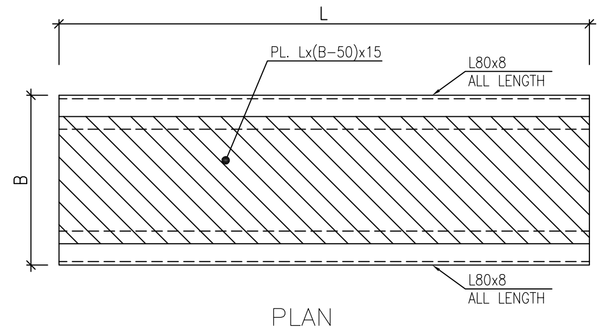

N.T.S. (6) DETAIL

D01

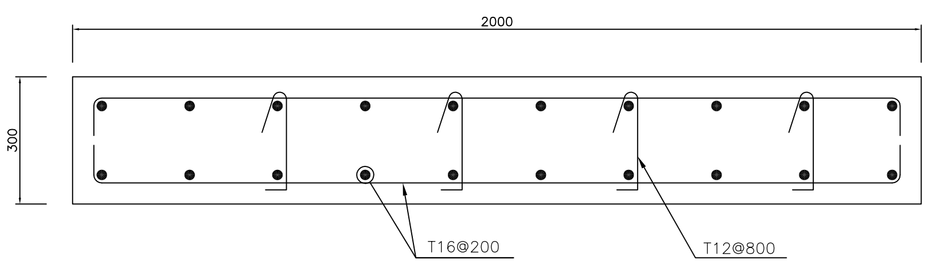

1:10 (5) REINFORCEMENT

Pos	Spec.	Shape	L/A	No.	T12	T16
1	T12	100 200 100	0.400	108	43.20	–
2	T16	250 4900 250	5.400	486	–	2624.400
3	T16	250 1700 250	2.200	540	–	1188.000
4	T16	250 1850 250	2.350	432	–	1015.200
5	T16	250 1350 250	1.850	594	–	1098.900
TOTAL LENGTH OR AREA (m/m2)					43.20	5926.50
UNIT WEIGHT (Kg)					0.888	1.578
WEIGHT (Kg)					38.36	9352.02
GRAND TOTAL (Kg)					~9400.00Kg.	

NOTES

1) ALL ELEVATIONS AND COORDINATES ARE IN "m" AND DIMENSIONS ARE IN "mm" UNLESS OTHERWISE NOTED.
2) ALL DIMENSIONS AND ELEVATIONS SHALL BE CHECKED BY THE CONTRA PRIOR TO CONSTRUCTION.
3) 28 DAYS CHARACTERISTIC COMPRESSIVE STRENGTH OF CONCRETE IS 30M (ON CYLINDRICAL SPECIMEN)
4) 28 DAYS CHARACTERISTIC COMPRESSIVE STRENGTH OF LEAN CONCRETE IS 1 (ON CYLINDRICAL SPECIMEN)
5) CONCRETE COVER OVER BARS SHALL BE 75mm FOR FOUNDATION A 40mm FOR CAST IN−SITU OTHER PARTS.
6) TENSION STRENGTH OF BARS SHALL BE OF MINIMUM Fy=4000
7) UNDERGROUND CONCRETE SHALL BE PROTECTED AND COATED ACCORD TO RELEVANT SPECIFICATION.
8) CEMENT TYPE II SHALL BE USED ACCORDING TO GEOTECHNICAL REPORT SUGGESTION.
9) FILL MATERIAL SHALL BE COMPACTED TO NOT LESS THAN 95% THE MAXIMUM DENSITY AS DETERMINED BY ASTM D−1557 (MODIFIED PROCTOR) METHOD.
10) REINFORCEMENT SHALL BE ADJUSTED LOCALLY TO SUIT THE I OF ANCHOR BOLTS, HOLES AND OTHER EMBEDDED MATERIALS
11) SHOULD BE USED THE EMULSION ON CONCRETE EXPOSED WI B−90−COAT.M.E IS A BITUMEN−BASED ONE−COMPONENT EMULSION PROTECTIVE COATING TO PREVENT THE PENETRATION OF DESTRUCTIVE SALTS & THIS MATERIAL IS CONTROLLED ACCORDING TO THE FOLLOWING STAN ASTM D1227, ASTM D2939, ASTM D1640

LEGEND

G.L.	GROUND LEVEL
T.O.F.	TOP OF FOUNDATION
B.O.F.	BOTTOM OF FOUNDATION
T.O.G.	TOP OF GROUT
H.P.P.	HIGH POINT OF PAVING
T.O.S.	TOP OF STEEL
B.O.L.C.	BOTTOM OF LEAN CONCRETE

REINFORCED CONCRETE
LEAN CONCRETE
GROUND

REFERENCE DRAWING	DRG. No.
STANDARD DRAWING FOR INSERT PLATES IN CONCRETE	BK−GNRAL−PEDCO−000−ST
GENERAL NOTES – REINFORCED CONCRETE STRUCTURES	BK−GNRAL−PEDCO−000−ST
STANDARD PIPE SUPPORT DRAWINGS	BK−GCS−PEDCO−120−PI−D
UNIT PLOT PLAN DRAWING	BK−GCS−PEDCO−120−PI−F

KEY PLAN

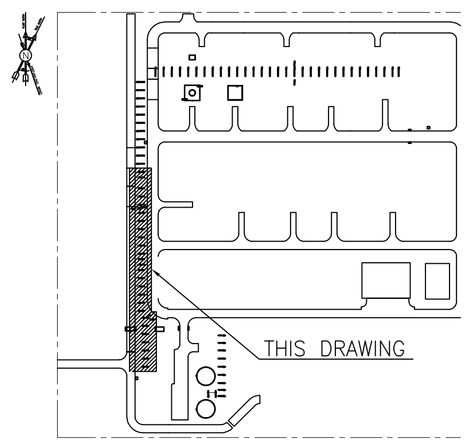

REV.	DATE	P.O.I.S	PREP.	CHK.	APP.	AUT.
D01	MAR.2023	IFA	R.BERLOUIE	M.FAKHARIAN	M.MEHRSHAD	**.**
D00	JAN.2023	IFC	R.BERLOUIE	M.FAKHARIAN	M.MEHRSHAD	**.**

REV.	DESCRIPTION	CHECKED BY	DATE BY	REV. AP
***	**********	**.**	***.****	**.**

و کلیه نسخ این نقشه و حق اقتباس متعلق به شرکت ملی مناطق نفت خیز جنوب میباشد.
THE ORIGINAL AND ALL COPIES OF THIS DRAWING TOGETHER THE COPYRIGHT THEREIN ARE THE SOLE PROPERTY OF N.I.S.O.C./ FIELDS

PROJECT NAME: BINAK OILFIELD DEVELOPMENT/SURFACE FACILITIES GAS COMPRESSOR STATION

PROJECT NO.: 971020

EPC CONTRACTOR: HIRGAN ENERGY - DESIGN & INSPECTION COMPANIES

EPD/EPC CONTRACTOR (GC): PEDCO — PETROIRAN DEVELOPMENT COMPANY

BINAK OILFIELD DEVELOPMENT
SURFACE FACILITIES
GAS COMPRESSOR STATION

DATE	SCALE	DRAWING BY	CHECKED BY	PROJE

DRAWING TITLE: FOUNDATION DRAWING FOR COMPRESSOR AREA SECONDARY SLEEPERS

NO CONSTRUCTION PERMITTED UNLESS DRAWING APPROVE

APPROVED FOR CONSTRUCTION | BY: | DATE:

SCALE	SIZE	DRAWING NO.	SHEET NO.	REV.	BUDGET REF.	LOCATION	SIZE	CLASS	SERIAL NO.	SHEET
1:20	A0	BK−GCS−PEPCO−120−ST−DW−0045	05 OF 05	D01	053−073−9184	F	4	Q	709182	04