DIESEL OIL DRUM

NOMINAL CAPACITY : 4.2 m^3
DIMENSION (ID X TL–TL) : 1250 X 3000 mm
DESIGN PRESS. : ATM + FULL OF WATER
DESIGN TEMP. : 85 °C

TRIM LINE: "G"

DIESEL GENERATOR PACKAGE

DESIGN DUTY : 250 KVA

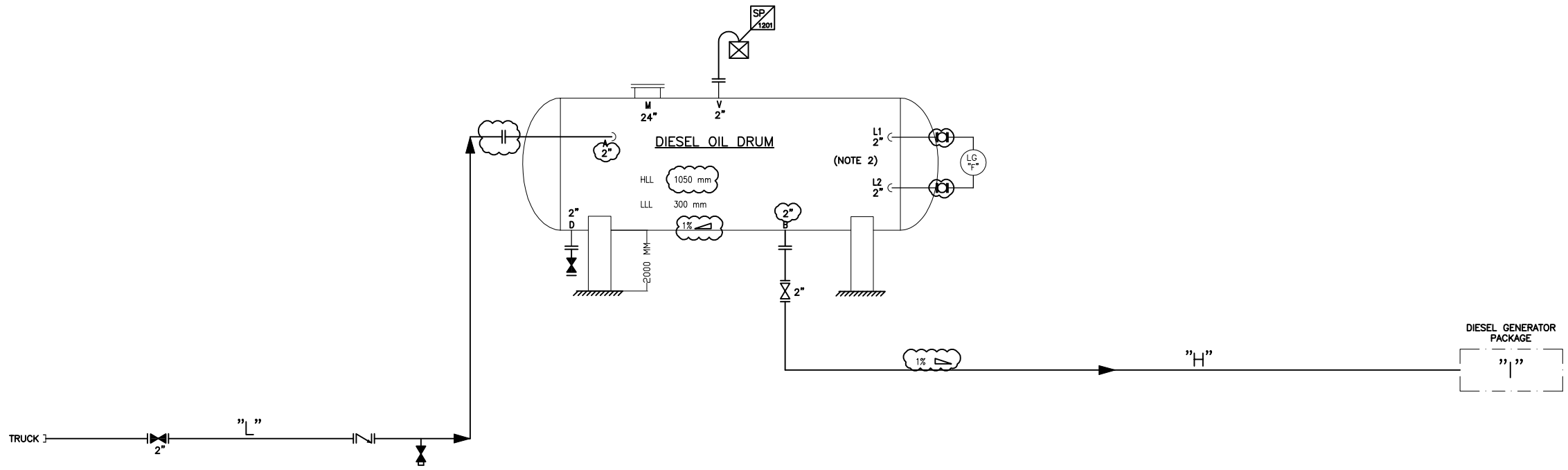

INSTRUMENT & LINE NUMBER FOR DIESEL OIL DRUM

DIESEL OIL DRUM NO.	DIESEL OIL DRUM NOMINAL CAPACITY M3	DIMENSION (ID X TL-TL) mm	DIESEL GENERATOR PACKAGE AREA "I"	TRIM LINE NO DIESEL OIL DRUM "G"	LINE NO TO DIESEL OIL DRUM "L"	LINE NO TO DIESEL GENERATOR PACKAGE "H"	INSTRUMENT NUMBER LG "F
V-1201	4.2	1250 X 3000	PK-1201	DO-110-1201-AN01-PT	DO-110-1201-AN01-2"-PT	DO-110-1202-AN01-2"-PT	1201
V-1301	4.2	1250 X 3000	PK-1301	DO-110-1301-AN01-PT	DO-110-1301-AN01-2"-PT	DO-110-1302-AN01-2"-PT	1301
V-1901	4.2	1250 X 3000	PK-1901	DO-110-1901-AN01-PT	DO-110-1901-AN01-2"-PT	DO-110-1902-AN01-2"-PT	1901
V-2001	4.2	1250 X 3000	PK-2001	DO-110-2001-AN01-PT	DO-110-2001-AN01-2"-PT	DO-110-2002-AN01-2"-PT	2001
V-2101	4.2	1250 X 3000	PK-2101	DO-110-2101-AN01-PT	DO-110-2101-AN01-2"-PT	DO-110-2102-AN01-2"-PT	2101
V-2201	4.2	1250 X 3000	PK-2201	DO-110-2201-AN01-PT	DO-110-2201-AN01-2"-PT	DO-110-2202-AN01-2"-PT	2201

NOTES

1– DELETED.
2–LEVEL GAUGE SHALL BE PROVIDED BY TANK VENDOR.

GENERAL NOTE

LEGEND

REFERENCE DRAWING	DRG. No.
Symbol & Legend For PFD and P&ID	BK-SSGRL-PEDCO-110-PR-PI-0001

KEY PLAN

REV.	DATE	P.O.I.S	PREP.	CHK.	APP.	AUT.
						.
						.
						.
D01	APR.2022	IFA	M.ARYAFAR	M.PAKBAANAN	A.M.MOHSENI	**.**
D00	DEC.2022	IFC	M.ARYAFAR	M.PAKBAANAN	M.MEHRSHAD	**.**

REV.	DESCRIPTION	CHECKED BY	CHECKED DATE	REV. APPR. BY	REV. APPR. DATE
***	**********	**.**	***.****	**.**	***.****

PROJECT NAME: BINAK OILFIELD DEVELOPMENT/SUB–SURFACE WORK PACKAGES W007S WHF & EXTENSION OF BINAK B/C

PROJECT NO.: 971020

EPC CONTRACTOR: HIRGAN ENERGY – DESIGN & INSPECTION COMPANIES

EPD/EPC CONTRACTOR (GC): PETROIRAN DEVELOPMENT COMPANY — PEDCO

اصل و کلیه نسخ این نقشه و حق اقتباس متعلق به شرکت ملی مناطق نفت خیز جنوب میباشد
THE ORIGINAL AND ALL COPIES OF THIS DRAWING TOGETHER WITH THE COPYRIGHT THEREIN ARE THE SOLE PROPERTY OF N.I.S.O.C./ FIELDS

BINAK OILFIELD DEVELOPMENT
SUB–SURFACE WORK PACKAGES
W007S WHF & EXTENSION OF BINAK B/C

DATE	SCALE	DRAWING BY	CHECKED BY	PROJECT ENG.

NO CONSTRUCTION PERMITTED UNLESS DRAWING APPROVED

APPROVED FOR CONSTRUCTION | BY: | DATE:

(VENDOR TITLE BLOCK)**

DRAWING TITLE: P&ID for Diesel Oil Drum

SCALE	SIZE	DRAWING NO.	SHEET NO.	REV.
NS	A3	BK-SSGRL-PEDCO-110-PR-PI-0002	1 OF 1	D01

BUDGET REF.	LOCATION	SIZE	CLASS	SERIAL NO.	SHEET	REVISION
053-073-9184	F	2	A	709507	1 OF 1	D01