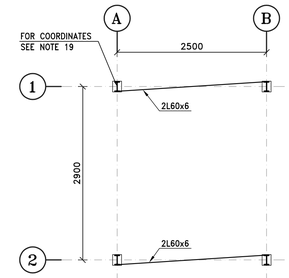

1:50 (1) COLUMN PLAN

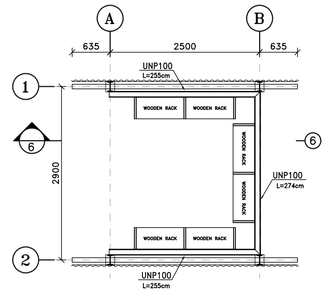

1:50 (2) EQUIPMENT ARRANGEMENT PLAN

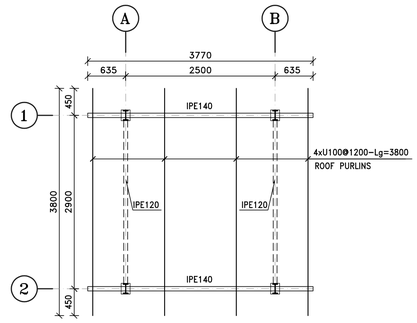

1:50 (3) ROOF PURLIN PLAN

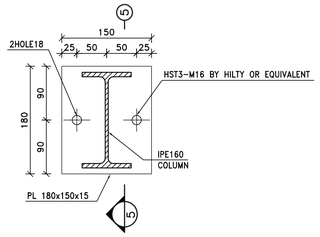

1:5 (4) TYPICAL BASE PLATE DETAIL

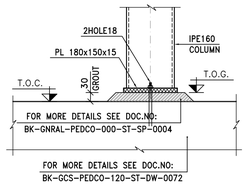

1:10 (5)

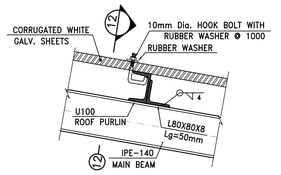

1:10 (11)

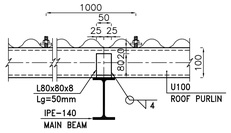

1:10 (12)

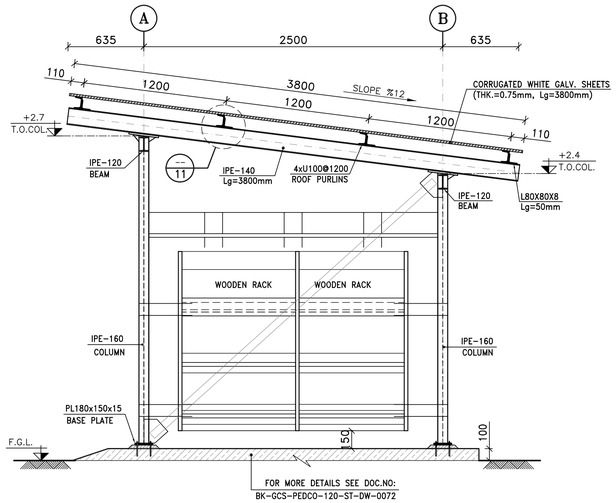

1:25 (6)

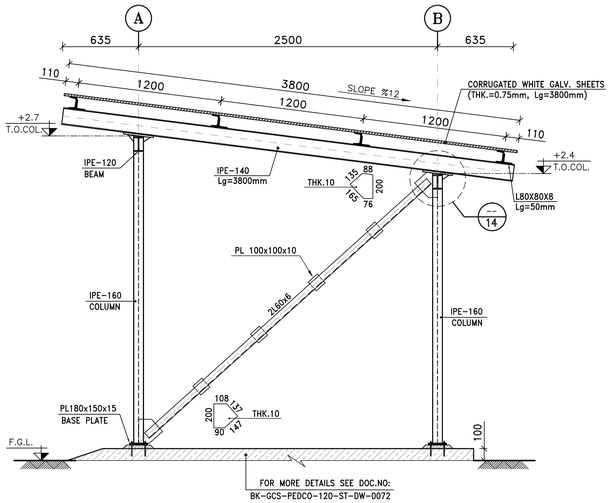

1:25 (7) SIDE ELEVATION AXIS 1&2

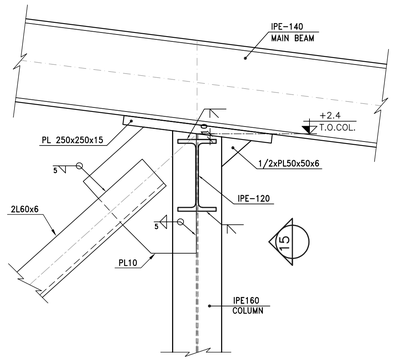

1:5 (14)

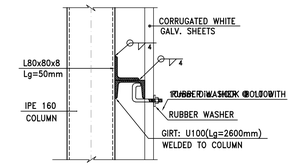

1:10 (13)

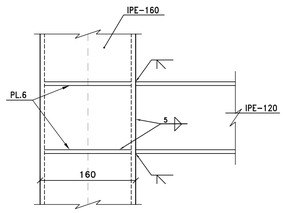

1:5 (15)

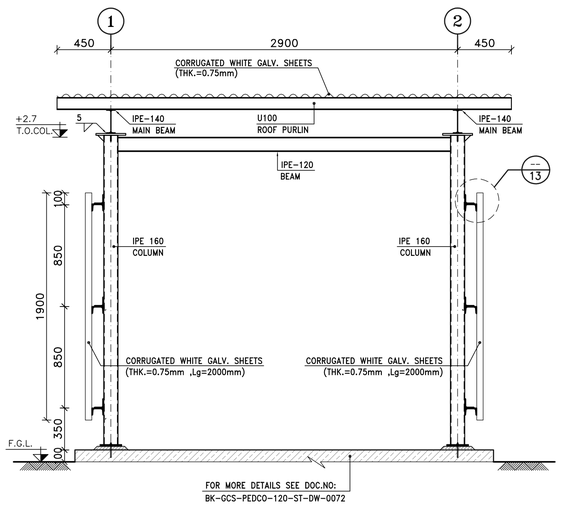

1:25 (8) SIDE ELEVATION AXES A

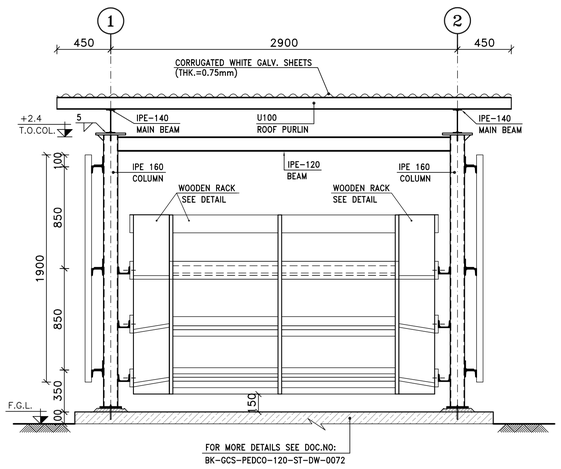

1:25 (9) SIDE ELEVATION AXES B

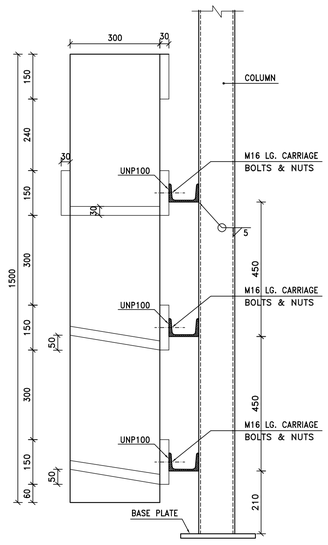

1:10 (10) WOODEN RACK DETAIL

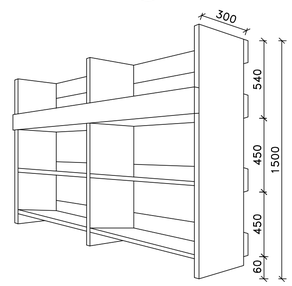

N.T.S. (16) PERSPECTIVE VIEW OF WOODEN RACK

NOTES

1) ALL DIMENSIONS ARE IN "mm" AND ELEVATIONS IN "m" UNLESS SPECIFIED .
2) ALL DIMENSIONS AND ELEVATIONS SHALL BE CHECKED BY THE CONTRACTOR PRIOR TO CONSTRUCTION.
3) CONTRACTOR SHALL CHECK THE FOUNDATION DRAWING WITH ALL ARCHITECTURAL, STRUCTURAL, MECHANICAL, INSTRUMENT, PIPING & ELECTRICAL DRAWINGS BEFORE CONSTRUCTION AND ANY REQUIRED MODIFICATIONS SHALL BE CONSIDERED WITH PRIOR CLIENT APPROVED BEFORE CONSTRUCTION.
4) 28 DAYS CHARACTERISTIC COMPRESSIVE STRENGTH OF LEAN CONCRETE IS 10 MPa. (ON CYLINDRICAL SPECIMEN)
5) AT ALL FIRE SHEDS ,TOP OF CONCRETE LEVEL SHOULD BE +0.10m ABOVE F.G.L .
6) THERE ARE SEVERAL FIRE SHEDS IN THE SITE. FOR NORTH DIRECTION AND COORDINATES, SEE RELATED PLOT PLAN DRAWING.
7) ALL STEEL WORK TO RECEIVE ONE COAT OF RED OXIDE PRIMER AND TWO COATS OF ENAMEL PAINT (SIGNAL RED B.S. COLOR NO.537)
8) DEDICATED LIGHTING SYSTEMS SHALL BE CONSIDERED BASED ON HAZARDOUS AREA CLASSIFICATION.
9) THE FIRE SHED SHALL BE EQUIPPED WITH THE FOLLOWING EQUIPMENT :
   a) PORTABLE DRY POWDER EXTINGUISHER 12 Kg (No.=6)
   b) NO WHEELED CO2 EXTINGUISHER 30 Kg (No.=3)
   c) FIRE FIGHTING HOSE COIL (No.=5)
   d) NO WHEELED DRY POWDER EXTINGUISHER 75 Kg (No.=2)
   e) NO WATER NOZZLE (No.=2)
   f) NO WRENCH (No.=2)
10) STEEL MATERIAL SHALL BE CONSIDERED FOR PROFILES, PLATES AZ ISIRI 14262-2
11) BOLTS ,NUTS AND WASHERS USED MUST BE HIGH STRENGTH 8.8 .
12) ALL ANCHOR BOLTS SHALL BE HOT DIP-GALVANIZED.
13) UNLESS OTHERWISE INDICATED, WELDING DIMENSION "a" SHALL BE 0.8xmin(t1,t2).
14) THERE ARE SEVERAL FIRE SHEDS IN THE SITE. FOR NORTH DIRECTION AND COORDINATES, SEE RELATED PLOT PLAN DRAWING.
15) ALL WELDING IS DONE ON SITE.

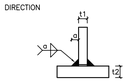

LEGEND

F.G.L. = FINISHED GRADING LEVEL
T.O.C. = TOP OF CONCRETE LEVEL
T.O.G. = TOP OF GROUT LEVEL
T.O.COL. = TOP OF COLUMN
GALV. = GALVANIZED
THK. = THICKNESS
Lg. = LENGTH
Dia. = DIAMETER
PL. = PLATE

REINFORCED CONCRETE
GROUT
GROUND

REFERENCE DRAWING	DRG. No.
SPECIFICATION FOR FABRICATION OF STEEL STRUCTURES	BK-GNRAL-PEDCO-000-ST-SP-0003
SPECIFICATION FOR ERECTION OF STEEL STRUCTURES	BK-GNRAL-PEDCO-000-ST-SP-0005
STANDARD DRAWING FOR ANCHOR BOLTS	BK-GNRAL-PEDCO-000-ST-DW-0002
GENERAL NOTES - STEEL STRUCTURES	BK-GNRAL-PEDCO-000-ST-DW-0011
GENERAL NOTES - REINFORCED CONCRETE STRUCTURES	BK-GNRAL-PEDCO-000-ST-DW-0012
ARCHITECTURAL DRAWING FOR FIRE SHED	BK-SSGRL-PEDCO-110-AR-DW-0001
FOUNDATION DRAWING FOR FIRE SHED	BK-SSGRL-PEDCO-110-ST-DW-0001
SPECIFICATION FOR GROUTING	BK-GNRAL-PEDCO-000-ST-SP-0004
FIRE FIGHTING FACILITIES EQUIPMENT STORAGE SHED	S4M08236_001B
FIRE FIGHTING FACILITIES EQUIPMENT STORAGE SHED	S8M08236_0010
FIRE FIGHTING FACILITIES EQUIPMENT STORAGE SHED	S8M08236_0020

KEY PLAN

REV.	DATE	P.O.I.S	PREP.	CHK.	APP.	AUT.
D00	MAY.2023	IFC	R.BERLOUIE	M.FAKHARIAN	A.M.MOHSENI	**.**

REV.	DESCRIPTION	BY	DATE	BY	DATE
***	**********	**.**	***.****	**.**	***.****
		CHECKED		REV. APPR.	

PROJECT NAME: BINAK OILFIELD DEVELOPMENT/SUB-SURFACE WORK PACKAGES GENERAL

PROJECT NO.: 971020

EPC CONTRACTOR: HIRGAN ENERGY - DESIGN & INSPECTION COMPANIES

EPD/EPC CONTRACTOR (GC): PETROIRAN DEVELOPMENT COMPANY (PEDCO)

DRAWING TITLE: STRUCTURAL DRAWING FOR FIRE SHED

SCALE	SIZE	DRAWING NO.	SHEET NO.	REV.
AS SHOWN	A1	BK-SSGRL-PEDCO-110-ST-DW-0002	01 OF 01	D00

اصل و کلیه نسخ این نقشه و حق اقتباس متعلق به شرکت ملی مناطق نفت خیز جنوب میباشد.

THE ORIGINAL AND ALL COPIES OF THIS DRAWING TOGETHER WITH THE COPYRIGHT THEREIN ARE THE SOLE PROPERTY OF N.I.S.O.C./ FIELDS

BINAK OILFIELD DEVELOPMENT
SUB-SURFACE WORK PACKAGES
GENERAL

DATE	SCALE	DRAWING BY	CHECKED BY	PROJECT ENG.

NO CONSTRUCTION PERMITTED UNLESS DRAWING APPROVED

APPROVED FOR CONSTRUCTION | BY: | DATE:

BUDGET REF.	LOCATION	SIZE	CLASS	SERIAL NO.	SHEET	REVISION
053-073-9184	F	4	A	709390	01 OF 01	D00