DISTRIBUTION AND LIGHTING PANELS
SINGLE LINE DIAGRAM

NOTES

LEGEND

REFERENCE DRAWING	DRC. No.
ELECTRICAL OVERALL SINGLE LINE DIAGRAM	BK-GCS-PEDCO-120-EL-SL-0001
LIGHTING & SMALL POWER LAYOUT FOR BUILDING & SHELTER	BK-GCS-PEDCO-120-EL-PY-0004
AREA LIGHTING & SMALL POWER LAYOUT	BK-GCS-PEDCO-120-EL-PY-0003
DATA SHEETS FOR DISTRIBUTION & LIGHTING PANELS	BK-GCS-PEDCO-120-EL-DT-0016

KEY PLAN

REV.	DATE	P.O.I.S	PREP.	CHK.	APP.	AUT.
D00	JUN.2023	IFC	H.JUNAKIDA	M.FARHANIAN	A.M.MOHSENI	**.**

REV.	DESCRIPTION	BY	DATE	BY	DATE
		CHECKED		REV. APPR.	
***	**********	**.**	***.****	**.**	***.****

PROJECT NAME: BINAK OILFIELD DEVELOPMENT/SURFACE FACILITIES GAS COMPRESSOR STATION

PROJECT NO.: 971020

EPC CONTRACTOR: HIRGAN ENERGY – DESIGN & INSPECTION COMPANIES

EPD/EPC CONTRACTOR (GC): PEDCO — PETROIRAN DEVELOPMENT COMPANY

اصل و کلیه حق این نقشه و حق اقتباس متعلق به شرکت ملی مناطق نفت خیز جنوب میباشد.

THE ORIGINAL AND ALL COPIES OF THIS DRAWING TOGETHER WITH THE COPYRIGHT THEREIN ARE THE SOLE PROPERTY OF N.I.S.O.C./ FIELDS

BINAK OILFIELD DEVELOPMENT
SURFACE FACILITIES
GAS COMPRESSOR STATION

DATE	SCALE	DRAWING BY	CHECKED BY	PROJECT ENG.

(VENDOR TITLE BLOCK)**

DRAWING TITLE: DISTRIBUTION AND LIGHTING PANELS SINGLE LINE DIAGRAM

NO CONSTRUCTION PERMITTED UNLESS DRAWING APPROVED

APPROVED FOR CONSTRUCTION | BY: | DATE:

SCALE	SIZE	DRAWING NO.	SHEET NO.	REV.	BUDGET REF.	LOCATION	SIZE	CLASS	SERIAL NO.	SHEET	REVISION
NTS	A3	BK-GCS-PEDCO-120-EL-SL-0004	01 OF 08	D00	063-073-9184	P	2	P	709037	01 OF 08	D00

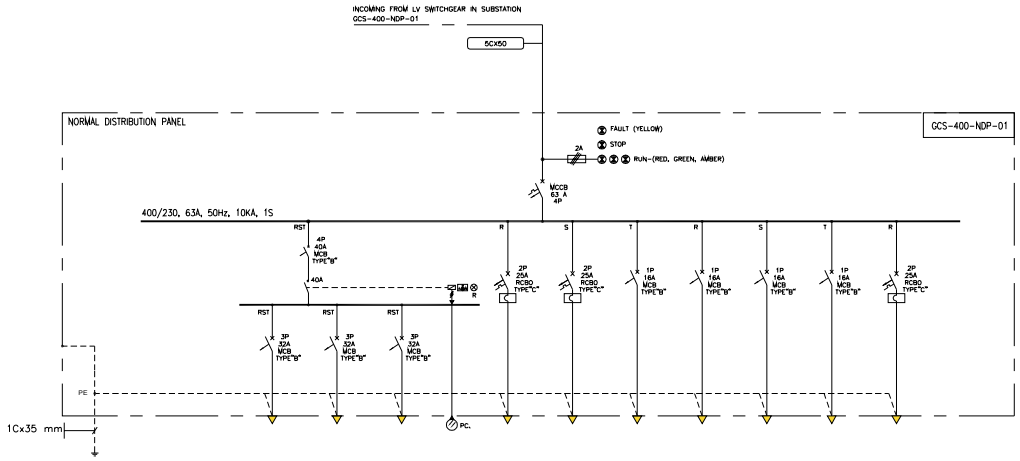

FEEDER ID	INCOMING	F01	F02	F (Spare)	F03	F04	F05	F06	F07	F08	F09
LINE	L1, L2, L3	L1,L2,L3	L1,L2,L3	L1,L2,L3	L1	L2	L3	L1	L2	L3	L1
DEMAND LOAD	13.6 KW	4800 W	2800 W	-	3000 W	-	1000 W	1000 W	1000 W	-	-
CONSUMER LOAD (W)	-	12NO. MT	7NO. MT	SPARE	3NO. SC	SPARE	4NO. HB	4NO. HB	4NO. HB	SPARE	SPARE
CABLE/ SIZE-TYPE	CU/XLPE/SWA/PVC 5CX50	CU/XLPE/SWA/PVC 5X6	CU/XLPE/SWA/PVC 5X6	-	CU/XLPE/SWA/PVC 3X6	-	CU/XLPE/SWA/PVC 3X4	CU/XLPE/SWA/PVC 3X4	CU/XLPE/SWA/PVC 3X4	-	-

NOTES

1- INCOMING CABLE SIZE SHALL BE SELECTED ACC. TO THE LATEST REVISION OF CALCULATION NOTE FOR CABLE SIZING (BK-GCS-PEDCO-120-EL-CN-0003).

2- INCOMING FEEDER SHALL BE PROVIDED WITH CURRENT LIMITING SYSTEM.

LEGEND

- AUTOMATIC CIRCUIT BREAKER MCCB WITH THERMAL MAGNET 4 POLE
- MINIATURE CIRCUIT BREAKER
- RCBO, RESIDUAL CIRCUIT BREAKER WITH OVER CURRENT PROTECTION
- PHOTO CELL
- FUSE
- SIGNAL LAMP

REFERENCE DRAWING	DRC. No.
ELECTRICAL OVERALL SINGLE LINE DIAGRAM	BK-GCS-PEDCO-120-EL-SL-0001
LIGHTING & SMALL POWER LAYOUT FOR BUILDING & SHELTER	BK-GCS-PEDCO-120-EL-PY-0004
AREA LIGHTING & SMALL POWER LAYOUT	BK-GCS-PEDCO-120-EL-PY-0003
DATA SHEETS FOR DISTRIBUTION & LIGHTING PANELS	BK-GCS-PEDCO-120-EL-DT-0016

KEY PLAN

X- X- X

- SEQUENCE NUMBER
- FLC: FLUORESCENT LIGHTING LAMP
  FLF: FLUORESCENT LIGHTING LAMP
  LED: LIGHT EMITTED DIODE
  XF: EXPLOSION PROOF FLUORESCENT FIXTURE
  IL: INCANDESCENT LAMP
  CM: CEILING MOUNTED
  EX: EXIT LIGHT
  FAN: EXHAUST FAN
  HB: HIGH BAY
  MT: METAL HALID
  SC: SOCKET
  SP-SC: SPLIT SOCKET
- N: NORMAL
  E: EMERGENCY

LIGHTING FIXTURE NUMBERING PROCEDURE

INSTALLATION	OUTDOOR
SHEET THICKNESS	2 mm
COLOR	RAL 7032
ACCESSIBILITY	FRONT
INC CONNECTION	BOTTOM
OUT CONNECTIONS	BOTTOM
INSTALLATION TYPE	SURFACE MOUNTED
IP CODE	IP 55
CANOPY	YES

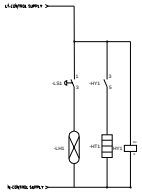

CONTROL DIAGRAM

REV.	DESCRIPTION	BY	DATE	BY	DATE
		CHECKED		REV. APPR.	
D00	JUN.2023	IFC	H.NAKAIMA	M.FARHANIAN	A.MOHSENI
REV.	DATE	P.O.I.S	PREP.	CHK.	APP.

PROJECT NAME: BINAK OILFIELD DEVELOPMENT/SURFACE FACILITIES GAS COMPRESSOR STATION

PROJECT NO.: 971020

EPC CONTRACTOR: HIRGAN ENERGY – DESIGN & INSPECTION COMPANIES

EPD/EPC CONTRACTOR (CC): PEDCO — PETROIRAN DEVELOPMENT COMPANY

اصل و کلیه حق این نقشه و حق افتباس متعلق به شرکت ملی مناطق نفت خیز جنوب میباشد.

THE ORIGINAL AND ALL COPIES OF THIS DRAWING TOGETHER WITH THE COPYRIGHT THEREIN ARE THE SOLE PROPERTY OF N.I.S.O.C./ FIELDS

BINAK OILFIELD DEVELOPMENT
SURFACE FACILITIES
GAS COMPRESSOR STATION

DATE	SCALE	DRAWING BY	CHECKED BY	PROJECT ENG.

(VENDOR TITLE BLOCK)**

DRAWING TITLE: DISTRIBUTION AND LIGHTING PANELS SINGLE LINE DIAGRAM

NO CONSTRUCTION PERMITTED UNLESS DRAWING APPROVED

APPROVED FOR CONSTRUCTION | BY: | DATE:

SCALE	SIZE	DRAWING NO.	SHEET NO.	REV.	BUDGET REF.	LOCATION	SIZE	CLASS	SERIAL NO.	SHEET	REVISION
NTS	A3	BK-GCS-PEDCO-120-EL-SL-0004	02 OF 06	D00	063-073-9184	P	2	P	709037	02 OF 06	D00

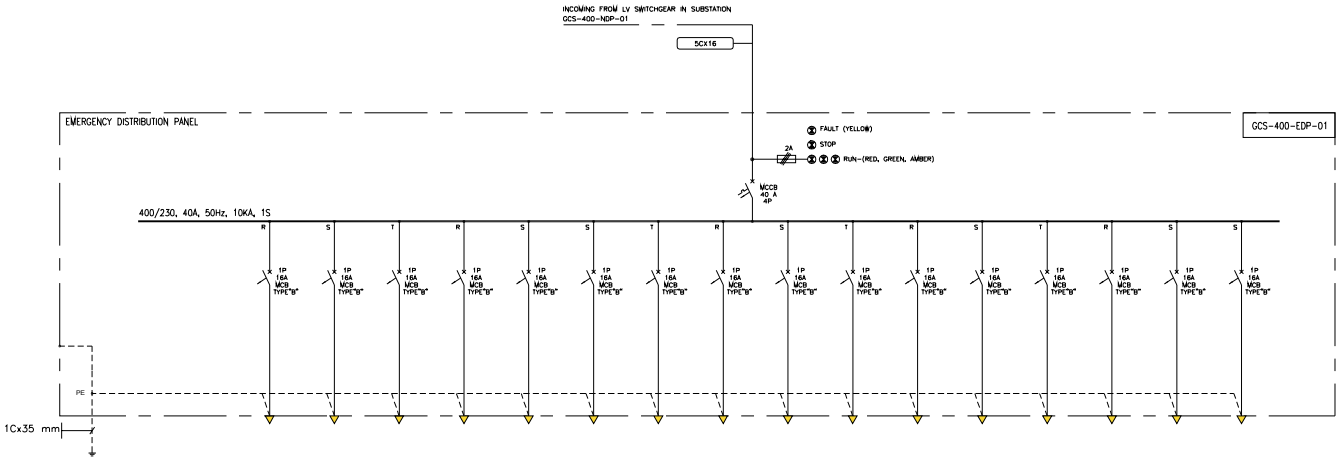

FEEDER ID	INCOMING	F1	F2	F3	F4	F5	F6	F7	F8	F9	F10	F11	F12	F13	F14	F15	F16
LINE	L1, L2, L3	L1	L2	L3	L1	L2	L3	L1	L2	L3	L1	L2	L3	L1	L2	L3	L1
DEMAND LOAD	4,736 KW	288 W	288 W	288 W	288 W	432 W	432 W	576 W	144 W	-	-	500 W	500 W	500 W	500 W	-	-
CONSUMER LOAD (W)	-	4NO. FLF	4NO. FLF	4NO. FLF	4NO. FLF	6NO. FLF	6NO. FLF	8NO. FLF	2NO. FLF	SPARE	SPARE	2NO. HB	2NO. HB	2NO. HB	2NO. HB	SPARE	SPARE
CABLE/ SIZE-TYPE	CU/XLPE/SWA/PVC 4CX16	CU/XLPE/SWA/PVC 3X4	CU/XLPE/SWA/PVC 3X4	CU/XLPE/SWA/PVC 3X4	CU/XLPE/SWA/PVC 3X4	CU/XLPE/SWA/PVC 3X4	CU/XLPE/SWA/PVC 3X4	CU/XLPE/SWA/PVC 3X4	CU/XLPE/SWA/PVC 3X4	-	-	CU/XLPE/SWA/PVC 3X4	CU/XLPE/SWA/PVC 3X4	CU/XLPE/SWA/PVC 3X4	CU/XLPE/SWA/PVC 3X4	-	-

X- X- X

- SEQUENCE NUMBER
- FLC: FLUORESCENT LIGHTING LAMP
  FLF: FLUORESCENT LIGHTING LAMP
  LED: LIGHT EMITTED DIODE
  XF: EXPLOSION PROOF FLUORESCENT FIXTURE
  IL: INCANDESCENT LAMP
  CM: CEILING MOUNTED
  EX: EXIT LIGHT
  FAN: EXHAUST FAN
  HB: HIGH BAY
  MT: METAL HALID
  SC: SOCKET
  SP-SC: SPLIT SOCKET
- N: NORMAL
  E: EMERGENCY

LIGHTING FIXTURE NUMBERING PROCEDURE

INSTALLATION	OUTDOOR
SHEET THICKNESS	2 mm
COLOR	RAL 7032
ACCESSIBILITY	FRONT
INC CONNECTION	BOTTOM
OUT CONNECTIONS	BOTTOM
INSTALLATION TYPE	SURFACE MOUNTED
IP CODE	IP 55
CANOPY	YES

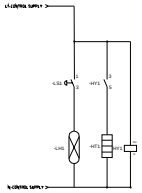

CONTROL DIAGRAM

NOTES

1- INCOMING CABLE SIZE SHALL BE SELECTED ACC. TO THE LATEST REVISION OF CALCULATION NOTE FOR CABLE SIZING (BK-GCS-PEDCO-120-EL-CN-0003).

2- INCOMING FEEDER SHALL BE PROVIDED WITH CURRENT LIMITING SYSTEM.

LEGEND

- AUTOMATIC CIRCUIT BREAKER MCCB WITH THERMAL MAGNET 4 POLE
- MINIATURE CIRCUIT BREAKER
- RCBO, RESIDUAL CIRCUIT BREAKER WITH OVER CURRENT PROTECTION
- PHOTO CELL
- FUSE
- SIGNAL LAMP

REFERENCE DRAWING	DRC. No.
ELECTRICAL OVERALL SINGLE LINE DIAGRAM	BK-GCS-PEDCO-120-EL-SL-0001
LIGHTING & SMALL POWER LAYOUT FOR BUILDING & SHELTER	BK-GCS-PEDCO-120-EL-PY-0004
AREA LIGHTING & SMALL POWER LAYOUT	BK-GCS-PEDCO-120-EL-PY-0003
DATA SHEETS FOR DISTRIBUTION & LIGHTING PANELS	BK-GCS-PEDCO-120-EL-DT-0016

KEY PLAN

REV.	DESCRIPTION	BY	DATE	BY	DATE
		CHECKED		REV. APPR.	
D00	JUN.2023 IFC	H.NAKADA	M.FARHADIAN	A.MORSEN	** **
REV.	DATE P.O.I.S	PREP.	CHK.	APP.	AUT.

PROJECT NAME: BINAK OILFIELD DEVELOPMENT/SURFACE FACILITIES GAS COMPRESSOR STATION

PROJECT NO.: 971020

EPC CONTRACTOR: HIRGAN ENERGY – DESIGN & INSPECTION COMPANIES

EPD/EPC CONTRACTOR (CC): PETROIRAN DEVELOPMENT COMPANY (PEDCO)

اصل و کلیه حق این نقشه و حق افتباس متعلق به شرکت ملی مناطق نفت خیز جنوب میباشد.

THE ORIGINAL AND ALL COPIES OF THIS DRAWING TOGETHER WITH THE COPYRIGHT THEREIN ARE THE SOLE PROPERTY OF N.I.S.O.C./ FIELDS

BINAK OILFIELD DEVELOPMENT
SURFACE FACILITIES
GAS COMPRESSOR STATION

DATE	SCALE	DRAWING BY	CHECKED BY	PROJECT ENG.

(VENDOR TITLE BLOCK)**

DRAWING TITLE: DISTRIBUTION AND LIGHTING PANELS SINGLE LINE DIAGRAM

NO CONSTRUCTION PERMITTED UNLESS DRAWING APPROVED

APPROVED FOR CONSTRUCTION | BY: | DATE:

SCALE	SIZE	DRAWING NO.	SHEET NO.	REV.	BUDGET REF.	LOCATION	SIZE	CLASS	SERIAL NO.	SHEET	REVISION
NTS	A3	BK-GCS-PEDCO-120-EL-SL-0004	03 OF 06	D00	063-073-9184	P	2	P	709037	03 OF 06	D00

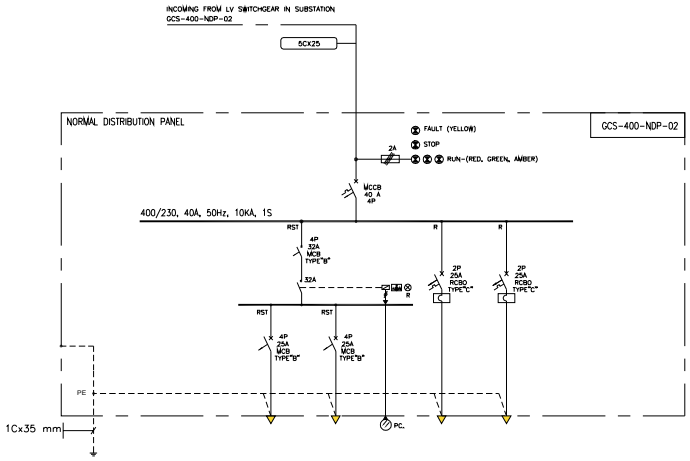

FEEDER ID	INCOMING	F1	F(Spare)	F2	F3
LINE	L1, L2, L3	L1,L2,L3	L1,L2,L3	L1	L2
DEMAND LOAD	6.6 KW	3600 W	-	3000 W	-
CONSUMER LOAD (W)	-	9NO. MT	SPARE	2NO. SC	SPARE
CABLE/ SIZE-TYPE	CU/XLPE/SWA/PVC 4CX25	CU/XLPE/SWA/PVC 5X6	-	CU/XLPE/SWA/PVC 3X6	-

NOTES

1- INCOMING CABLE SIZE SHALL BE SELECTED ACC. TO THE LATEST REVISION OF CALCULATION NOTE FOR CABLE SIZING (BK-GCS-PEDCO-120-EL-CN-0003).

2- INCOMING FEEDER SHALL BE PROVIDED WITH CURRENT LIMITING SYSTEM.

LEGEND

- AUTOMATIC CIRCUIT BREAKER MCCB WITH THERMAL MAGNET 4 POLE
- MINIATURE CIRCUIT BREAKER
- RCBO, RESIDUAL CIRCUIT BREAKER WITH OVER CURRENT PROTECTION
- PHOTO CELL
- FUSE
- SIGNAL LAMP

REFERENCE DRAWING	DRC. No.
ELECTRICAL OVERALL SINGLE LINE DIAGRAM	BK-GCS-PEDCO-120-EL-SL-0001
LIGHTING & SMALL POWER LAYOUT FOR BUILDING & SHELTER	BK-GCS-PEDCO-120-EL-PY-0004
AREA LIGHTING & SMALL POWER LAYOUT	BK-GCS-PEDCO-120-EL-PY-0003
DATA SHEETS FOR DISTRIBUTION & LIGHTING PANELS	BK-GCS-PEDCO-120-EL-DT-0016

KEY PLAN

X- X- X

- SEQUENCE NUMBER
- FLC: FLUORESCENT LIGHTING LAMP
  FLF: FLUORESCENT LIGHTING LAMP
  LED: LIGHT EMITTED DIODE
  XF: EXPLOSION PROOF FLUORESCENT FIXTURE
  IL: INCANDESCENT LAMP
  CM: CEILING MOUNTED
  EX: EXIT LIGHT
  FAN: EXHAUST FAN
  HB: HIGH BAY
  MT: METAL HALID
  SC: SOCKET
  SP-SC: SPLIT SOCKET
- N: NORMAL
  E: EMERGENCY

LIGHTING FIXTURE NUMBERING PROCEDURE

INSTALLATION	OUTDOOR
SHEET THICKNESS	2 mm
COLOR	RAL 7032
ACCESSIBILITY	FRONT
INC CONNECTION	BOTTOM
OUT CONNECTIONS	BOTTOM
INSTALLATION TYPE	SURFACE MOUNTED
IP CODE	IP 55
CANOPY	YES

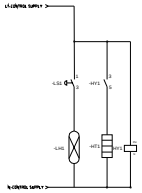

CONTROL DIAGRAM

REV.	DATE	P.O.I.S	PREP.	CHK.	APP.	AUT.
D00	JUN.2023	IFC	H.NAKAIMA	M.FARHANIAN	A.MOHSENI	**.**

REV.	DESCRIPTION	CHECKED BY	CHECKED DATE	REV. APPR. BY	REV. APPR. DATE
***	**********	**.**	***.****	**.**	***.****

PROJECT NAME: BINAK OILFIELD DEVELOPMENT/SURFACE FACILITIES GAS COMPRESSOR STATION

PROJECT NO.: 971020

EPC CONTRACTOR: HIRGAN ENERGY – DESIGN & INSPECTION COMPANIES

EPD/EPC CONTRACTOR (GC): PEDCO — PETROIRAN DEVELOPMENT COMPANY

اصل و کلیه نسخ این نقشه و حق افتباس متعلق به شرکت ملی مناطق نفت خیز جنوب میباشد.

THE ORIGINAL AND ALL COPIES OF THIS DRAWING TOGETHER WITH THE COPYRIGHT THEREIN ARE THE SOLE PROPERTY OF N.I.S.O.C./ FIELDS

BINAK OILFIELD DEVELOPMENT
SURFACE FACILITIES
GAS COMPRESSOR STATION

DATE	SCALE	DRAWING BY	CHECKED BY	PROJECT ENG.

(VENDOR TITLE BLOCK)**

DRAWING TITLE: DISTRIBUTION AND LIGHTING PANELS SINGLE LINE DIAGRAM

NO CONSTRUCTION PERMITTED UNLESS DRAWING APPROVED

APPROVED FOR CONSTRUCTION | BY: | DATE:

SCALE	SIZE	DRAWING NO.	SHEET NO.	REV.	BUDGET REF.	LOCATION	SIZE	CLASS	SERIAL NO.	SHEET	REVISION
NTS	A3	BK-GCS-PEDCO-120-EL-SL-0004	04 OF 06	D00	063-073-9184	P	2	P	709037	04 OF 06	D00

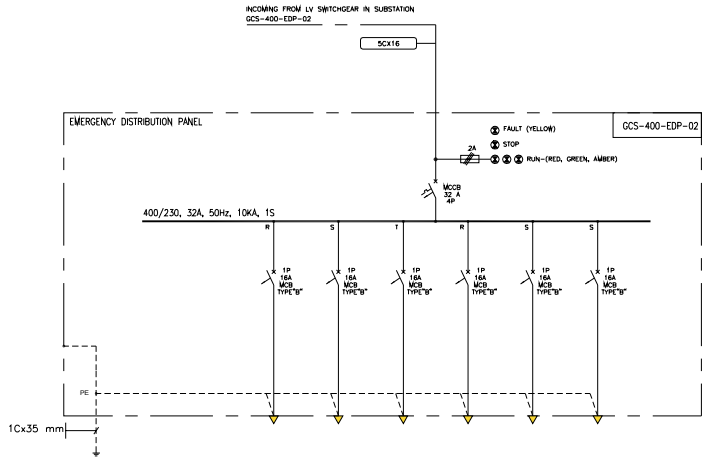

FEEDER ID	INCOMING	F1	F2	F3	F4	F5	F6
LINE	L1, L2, L3	L1	L2	L3	L1	L2	L3
DEMAND LOAD	3.144KW	144 W	-	2000 W	1000 W	-	-
CONSUMER LOAD (W)	-	2NO. FLF	SPARE	8NO. HB	4NO. HB	SPARE	SPARE
CABLE/ SIZE-TYPE	CU/XLPE/SWA/PVC 4CX16	CU/XLPE/SWA/PVC 3X4		CU/XLPE/SWA/PVC 3X4	CU/XLPE/SWA/PVC 3X4	-	-

NOTES

1- INCOMING CABLE SIZE SHALL BE SELECTED ACC. TO THE LATEST REVISION OF CALCULATION NOTE FOR CABLE SIZING (BK-GCS-PEDCO-120-EL-CN-0003).

2- INCOMING FEEDER SHALL BE PROVIDED WITH CURRENT LIMITING SYSTEM.

LEGEND

- AUTOMATIC CIRCUIT BREAKER MCCB WITH THERMAL MAGNET 4 POLE
- MINIATURE CIRCUIT BREAKER
- RCBO, RESIDUAL CIRCUIT BREAKER WITH OVER CURRENT PROTECTION
- PHOTO CELL
- FUSE
- SIGNAL LAMP

REFERENCE DRAWING	DRC. No.
ELECTRICAL OVERALL SINGLE LINE DIAGRAM	BK-GCS-PEDCO-120-EL-SL-0001
LIGHTING & SMALL POWER LAYOUT FOR BUILDING & SHELTER	BK-GCS-PEDCO-120-EL-PY-0004
AREA LIGHTING & SMALL POWER LAYOUT	BK-GCS-PEDCO-120-EL-PY-0003
DATA SHEETS FOR DISTRIBUTION & LIGHTING PANELS	BK-GCS-PEDCO-120-EL-DT-0016

KEY PLAN

X- X- X

- SEQUENCE NUMBER
- FLC: FLUORESCENT LIGHTING LAMP
  FLF: FLUORESCENT LIGHTING LAMP
  LED: LIGHT EMITTED DIODE
  XF: EXPLOSION PROOF FLUORESCENT FIXTURE
  IL: INCANDESCENT LAMP
  CM: CEILING MOUNTED
  EX: EXIT LIGHT
  FAN: EXHAUST FAN
  HB: HIGH BAY
  MT: METAL HALID
  SC: SOCKET
  SP-SC: SPLIT SOCKET
- N: NORMAL
  E: EMERGENCY

LIGHTING FIXTURE NUMBERING PROCEDURE

INSTALLATION	OUTDOOR
SHEET THICKNESS	2 mm
COLOR	RAL 7032
ACCESSIBILITY	FRONT
INC CONNECTION	BOTTOM
OUT CONNECTIONS	BOTTOM
INSTALLATION TYPE	SURFACE MOUNTED
IP CODE	IP 55
CANOPY	YES

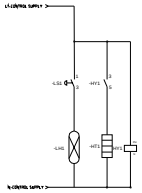

CONTROL DIAGRAM

REV.	DATE	P.O.I.S	PREP.	CHK.	APP.	AUT.
D00	JUN.2023	IFC	M.NAKAIMA	M.PARHAMIAN	A.M.MOHSENI	**.**

REV.	DESCRIPTION	BY	DATE	BY	DATE
		CHECKED		REV. APPR.	
***	**********	**.**	***.****	**.**	***.****

PROJECT NAME: BINAK OILFIELD DEVELOPMENT/SURFACE FACILITIES GAS COMPRESSOR STATION

PROJECT NO.: 971020

EPC CONTRACTOR: HIRGAN ENERGY – DESIGN & INSPECTION COMPANIES

EPD/EPC CONTRACTOR (CC): PETROIRAN DEVELOPMENT COMPANY (PEDCO)

اصل و کلیه نسخ این نقشه و حق افتباس متعلق به شرکت ملی مناطق نفت خیز جنوب میباشد.

THE ORIGINAL AND ALL COPIES OF THIS DRAWING TOGETHER WITH THE COPYRIGHT THEREIN ARE THE SOLE PROPERTY OF N.I.S.O.C./ FIELDS

BINAK OILFIELD DEVELOPMENT
SURFACE FACILITIES
GAS COMPRESSOR STATION

DATE	SCALE	DRAWING BY	CHECKED BY	PROJECT ENG.

(VENDOR TITLE BLOCK)**

DRAWING TITLE: DISTRIBUTION AND LIGHTING PANELS SINGLE LINE DIAGRAM

NO CONSTRUCTION PERMITTED UNLESS DRAWING APPROVED

APPROVED FOR CONSTRUCTION | BY: | DATE:

SCALE	SIZE	DRAWING NO.	SHEET NO.	REV.	BUDGET REF.	LOCATION	SIZE	CLASS	SERIAL NO.	SHEET	REVISION
NTS	A3	BK-GCS-PEDCO-120-EL-SL-0004	05 OF 06	D00	063-073-9184	P	2	P	709037	05 OF 06	D00

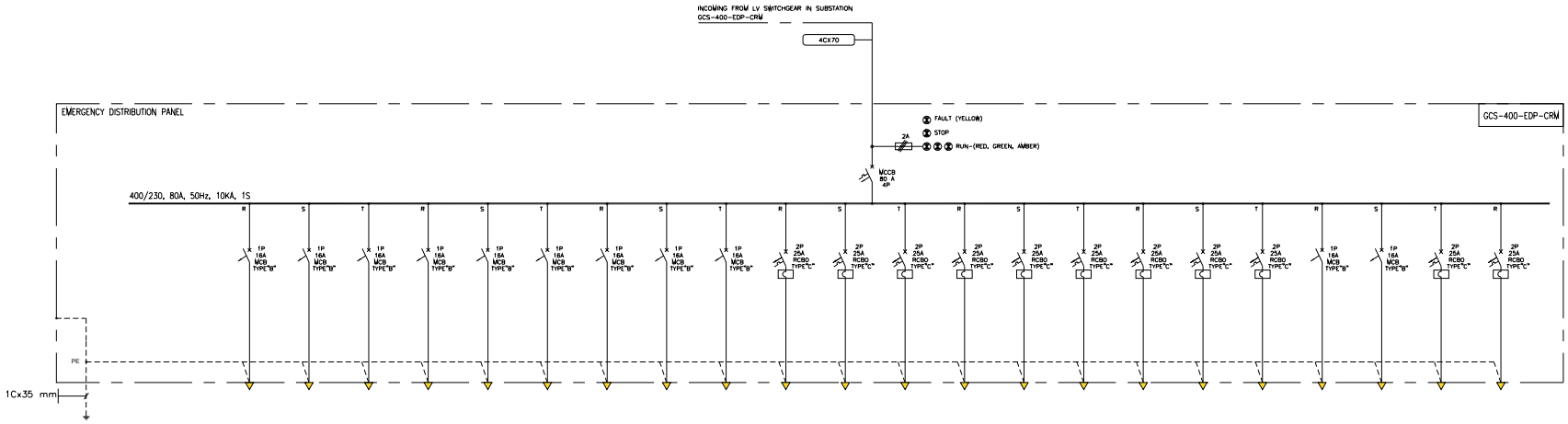

FEEDER ID	INCOMING	F1	F2	F3	F4	F5	F6	F7	F8	F9	F10	F11	F12	F13	F14	F15	F16	F17	F18	F19	F20	F21	F22
LINE	L1, L2, L3	L1	L2	L3	L1	L2	L3	L1	L2	L3	L1	L2	L3	L1	L2	L3	L1	L2	L3	L1	L2	L3	L1
DEMAND LOAD	30,274 KW	358 W	350 W	471 W	358 W	210 W	210 W	285 W	280 W	252 W	3500 W	3000 W	4000 W	2500 W	4000 W	3000 W	2000 W	2500 W	3000 W	-	-	-	-
CONSUMER LOAD (W)	-	1NO. EXIT 10NO. LED	10NO. LED	1NO. EXIT 4NO. XF 5NO. LED	1NO. EXIT 10NO. LED	6NO. LED	6NO. LED	2NO. CM 2NO. FAN 5NO. LED	6NO. CM 3NO. FAN 2NO. LED	14NO. IL	7NO. SC	6NO. SC	8NO. SC	5NO. SC	8NO. SC	6NO. SC	4NO. SC	5NO. SC	6NO. SC	SPARE	SPARE	SPARE	SPARE
CABLE/ SIZE-TYPE	CU/XLPE/SWA/PVC 4CX70	CU/PVC/PVC 3X2.5	CU/PVC/PVC 3X2.5	CU/PVC/PVC 3X2.5	CU/PVC/PVC 3X2.5	CU/PVC/PVC 3X2.5	CU/PVC/PVC 3X2.5	CU/PVC/PVC 3X2.5	CU/PVC/PVC 3X2.5	CU/PVC/PVC 3X2.5	CU/PVC/PVC 3X4	CU/PVC/PVC 3X4	CU/PVC/PVC 3X4	CU/PVC/PVC 3X4	CU/PVC/PVC 3X4	CU/PVC/PVC 3X4	CU/PVC/PVC 3X4	CU/PVC/PVC 3X4	CU/PVC/PVC 3X4	-	-	-	-

X- X- X

- SEQUENCE NUMBER
- FLC: FLUORESCENT LIGHTING LAMP
  FLF: FLUORESCENT LIGHTING LAMP
  LED: LIGHT EMITTED DIODE
  XF: EXPLOSION PROOF FLUORESCENT FIXTURE
  IL: INCANDESCENT LAMP
  CM: CEILING MOUNTED
  EX: EXIT LIGHT
  FAN: EXHAUST FAN
  HB: HIGH BAY
  MT: METAL HALID
  SC: SOCKET
  SP-SC: SPLIT SOCKET
- N: NORMAL
  E: EMERGENCY

LIGHTING FIXTURE NUMBERING PROCEDURE

SHEET THICKNESS	2 mm
COLOR	RAL 7032
ACCESSIBILITY	FRONT
INC CONNECTION	BOTTOM
OUT CONNECTIONS	BOTTOM
INSTALLATION TYPE	FLUSH MOUNTED
IP CODE	IP 42

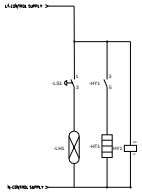

CONTROL DIAGRAM

NOTES

1- INCOMING CABLE SIZE SHALL BE SELECTED ACC. TO THE LATEST REVISION OF CALCULATION NOTE FOR CABLE SIZING (BK-GCS-PEDCO-120-EL-CN-0003).

2- INCOMING FEEDER SHALL BE PROVIDED WITH CURRENT LIMITING SYSTEM.

LEGEND

- AUTOMATIC CIRCUIT BREAKER MCCB WITH THERMAL MAGNET 4 POLE
- MINIATURE CIRCUIT BREAKER
- RCBO, RESIDUAL CIRCUIT BREAKER WITH OVER CURRENT PROTECTION
- PHOTO CELL
- FUSE
- SIGNAL LAMP

REFERENCE DRAWING	DRG. No.
ELECTRICAL OVERALL SINGLE LINE DIAGRAM	BK-GCS-PEDCO-120-EL-SL-0001
LIGHTING & SMALL POWER LAYOUT FOR BUILDING & SHELTER	BK-GCS-PEDCO-120-EL-PY-0004
AREA LIGHTING & SMALL POWER LAYOUT	BK-GCS-PEDCO-120-EL-PY-0003
DATA SHEETS FOR DISTRIBUTION & LIGHTING PANELS	BK-GCS-PEDCO-120-EL-DT-0016

KEY PLAN

REV.	DESCRIPTION	BY	DATE	BY	DATE
		CHECKED		REV. APPR.	
***	**********	**.**	***.****	**.**	***.****
D00	JUN.2023	IFC	H.NAKADA	M.FARHADIAN	A.MOHSENI
REV.	DATE	P.O.I.S	PREP.	CHK.	APP.

PROJECT NAME: BINAK OILFIELD DEVELOPMENT/SURFACE FACILITIES GAS COMPRESSOR STATION

PROJECT NO.: 971020

EPC CONTRACTOR: HIRGAN ENERGY – DESIGN & INSPECTION COMPANIES

EPD/EPC CONTRACTOR (CC): PETROIRAN DEVELOPMENT COMPANY (PEDCO)

اصل و کلیه حق این نقشه و حق افتباس متعلق به شرکت ملی مناطق نفت خیز جنوب میباشد.

THE ORIGINAL AND ALL COPIES OF THIS DRAWING TOGETHER WITH THE COPYRIGHT THEREIN ARE THE SOLE PROPERTY OF N.I.S.O.C./ FIELDS

BINAK OILFIELD DEVELOPMENT
SURFACE FACILITIES
GAS COMPRESSOR STATION

DATE	SCALE	DRAWING BY	CHECKED BY	PROJECT ENG.

(VENDOR TITLE BLOCK)**

DRAWING TITLE: DISTRIBUTION AND LIGHTING PANELS SINGLE LINE DIAGRAM

NO CONSTRUCTION PERMITTED UNLESS DRAWING APPROVED

APPROVED FOR CONSTRUCTION | BY: | DATE:

SCALE	SIZE	DRAWING NO.	SHEET NO.	REV.	BUDGET REF.	LOCATION	SIZE	CLASS	SERIAL NO.	SHEET	REVISION
NTS	A3	BK-GCS-PEDCO-120-EL-SL-0004	06 OF 06	D00	063-073-9184	P	2	P	709037	06 OF 06	D00

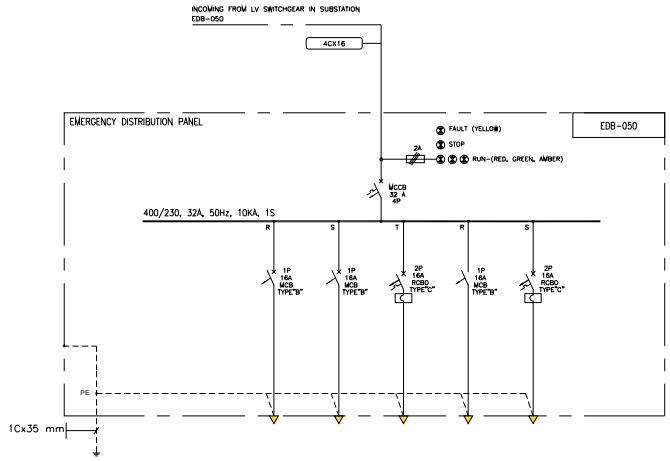

FEEDER ID	INCOMING	F1	F2	F3	F4	F5
LINE	L1, L2, L3	L1	L2	L3	L1	L2
DEMAND LOAD	2.936KW	720 W	216 W	2000 W	-	-
CONSUMER LOAD (W)	-	4NO. FLC	12NO. IL	4NO. SC	SPARE	SPARE
CABLE/ SIZE-TYPE	CU/XLPE/SWA/PVC 4CX16	CU/PVC/PVC 3X2.5	CU/PVC/PVC 3X2.5	CU/PVC/PVC 3X4	-	-

NOTES

1- INCOMING CABLE SIZE SHALL BE SELECTED ACC. TO THE LATEST REVISION OF CALCULATION NOTE FOR CABLE SIZING (BK-GCS-PEDCO-120-EL-CN-0003).

2- INCOMING FEEDER SHALL BE PROVIDED WITH CURRENT LIMITTING SYSTEM.

LEGEND

- AUTOMATIC CIRCUIT BREAKER MCCB WITH THERMAL MAGNET 4 POLE
- MINIATURE CIRCUIT BREAKER
- RCBO, RESIDUAL CIRCUIT BREAKER WITH OVER CURRENT PROTECTION
- PHOTO CELL
- FUSE
- SIGNAL LAMP

REFERENCE DRAWING	DRC. No.
ELECTRICAL OVERALL SINGLE LINE DIAGRAM	BK-GCS-PEDCO-120-EL-SL-0001
LIGHTING & SMALL POWER LAYOUT FOR BUILDING & SHELTER	BK-GCS-PEDCO-120-EL-PY-0004
AREA LIGHTING & SMALL POWER LAYOUT	BK-GCS-PEDCO-120-EL-PY-0003
DATA SHEETS FOR DISTRIBUTION & LIGHTING PANELS	BK-GCS-PEDCO-120-EL-DT-0016

KEY PLAN

X- X- X

- SEQUENCE NUMBER
- FLC: FLUORESCENT LIGHTING LAMP
  FLF: FLUORESCENT LIGHTING LAMP
  LED: LIGHT EMITTED DIODE
  XF: EXPLOSION PROOF FLUORESCENT FIXTURE
  IL: INCANDESCENT LAMP
  CM: CEILING MOUNTED
  EX: EXIT LIGHT
  FAN: EXHAUST FAN
  HB: HIGH BAY
  MT: METAL HALID
  SC: SOCKET
  SP-SC: SPLIT SOCKET
- N: NORMAL
  E: EMERGENCY

LIGHTING FIXTURE NUMBERING PROCEDURE

SHEET THICKNESS	2 mm
COLOR	RAL 7032
ACCESSIBILITY	FRONT
INC CONNECTION	BOTTOM
OUT CONNECTIONS	BOTTOM
INSTALLATION TYPE	SURFACE MOUNTED
IP CODE	IP 42

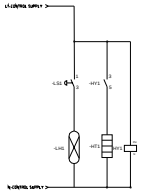

CONTROL DIAGRAM

REV.	DESCRIPTION	BY	DATE	BY	DATE
***	**********	**.**	***.****	**.**	***.****
		CHECKED		REV. APPR.	

REV.	DATE	P.O.I.S	PREP.	CHK.	APP.	AUT.
D00	JUN.2023	IFC	H.NAKAIMA	M.FARHANIAN	A.M.MOHSENI	**.**

PROJECT NAME: BINAK OILFIELD DEVELOPMENT/SURFACE FACILITIES GAS COMPRESSOR STATION

PROJECT NO.: 971020

EPC CONTRACTOR: HIRGAN ENERGY – DESIGN & INSPECTION COMPANIES

EPD/EPC CONTRACTOR (CC): PEDCO — PETROIRAN DEVELOPMENT COMPANY

اصل و کلیه نسخ این نقشه و حق افتباس متعلق به شرکت ملی مناطق نفت خیز جنوب میباشد.

THE ORIGINAL AND ALL COPIES OF THIS DRAWING TOGETHER WITH THE COPYRIGHT THEREIN ARE THE SOLE PROPERTY OF N.I.S.O.C./ FIELDS

BINAK OILFIELD DEVELOPMENT
SURFACE FACILITIES
GAS COMPRESSOR STATION

DATE	SCALE	DRAWING BY	CHECKED BY	PROJECT ENG.

(VENDOR TITLE BLOCK)**

DRAWING TITLE: DISTRIBUTION AND LIGHTING PANELS SINGLE LINE DIAGRAM

NO CONSTRUCTION PERMITTED UNLESS DRAWING APPROVED

APPROVED FOR CONSTRUCTION | BY: | DATE:

SCALE	SIZE	DRAWING NO.	SHEET NO.	REV.	BUDGET REF.	LOCATION	SIZE	CLASS	SERIAL NO.	SHEET	REVISION
NTS	A3	BK-GCS-PEDCO-120-EL-SL-0004	07 OF 08	D00	063-073-9184	P	2	P	709037	07 OF 08	D00

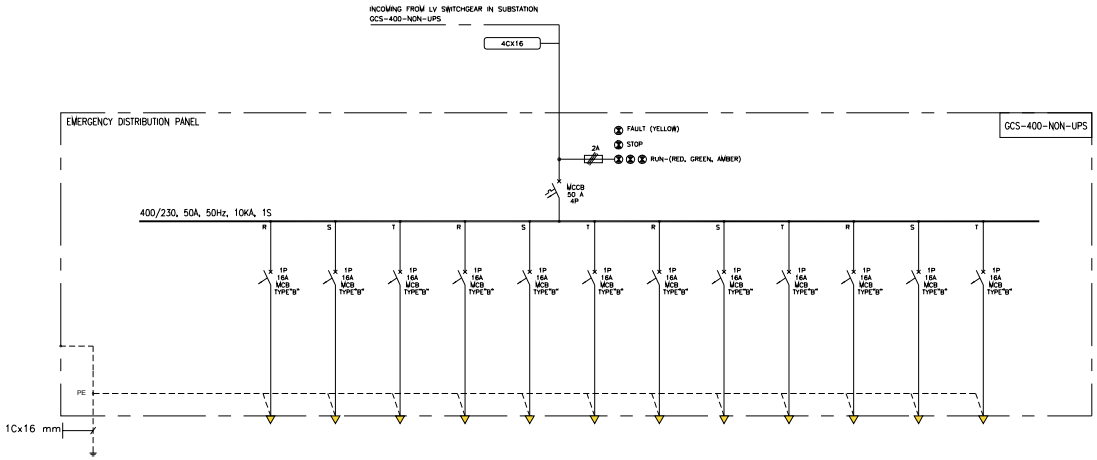

FEEDER ID	INCOMING	F1	F2	F3	F4	F5	F6	F7	F8	F9	F10	F11	F12
LINE	L1, L2, L3	L1	L2	L3	L1	L2	L3	L1	L2	L3	L1	L2	L3
DEMAND LOAD	7.18 KW	640 W	480 W	480 W	960 W	160 W	160 W	160 W	320 W	320 W	3500 W	-	-
CONSUMER LOAD (W)	-	CABINET UTILITIES FOR PCS (HEATER, SOCKET/ANLIGHT)	CABINET UTILITIES FOR ESD (HEATER, SOCKET/ANLIGHT)	CABINET UTILITIES FOR F&G (HEATER, SOCKET/ANLIGHT)	CABINET UTILITIES FOR GAS COMPRESSOR UCP (HEATER,SOCKET ,FAN,LIGHT)	CABINET UTILITIES FOR DEHYDRATION UNIT (IF ANY)(HEATER,SOCKET ,FAN,LIGHT)	CABINET UTILITIES FOR TOTAL FLOODING UCP (HEATER,SOCKET ,FAN,LIGHT)	CABINET UTILITIES FOR PACKING CABINET (HEATER,SOCKET ,FAN,LIGHT)	CABINET UTILITIES FOR AIR COMPRESSOR UCP (HEATER,SOCKET ,FAN,LIGHT)	CABINET UTILITIES FOR NITROGEN PACKAGE UCP (HEATER,SOCKET ,FAN,LIGHT)	CONTROL DESK SOCKETS	SPARE	SPARE
CABLE/ SIZE-TYPE	CU/XLPE/SWA/PVC 4CX16	CU/PVC/PVC 3X2.5	CU/PVC/PVC 3X2.5	CU/PVC/PVC 3X2.5	CU/PVC/PVC 3X2.5	CU/PVC/PVC 3X2.5	CU/PVC/PVC 3X2.5	CU/PVC/PVC 3X2.5	CU/PVC/PVC 3X2.5	CU/PVC/PVC 3X2.5	CU/PVC/PVC 3X4	-	-

SHEET THICKNESS	2 mm
COLOR	RAL 7032
ACCESSIBILITY	FRONT
INC CONNECTION	BOTTOM
OUT CONNECTIONS	BOTTOM
INSTALLATION TYPE	FLUSH MOUNTED
IP CODE	IP 42

NOTES

1- INCOMING CABLE SIZE SHALL BE SELECTED ACC. TO THE LATEST REVISION OF CALCULATION NOTE FOR CABLE SIZING (BK-GCS-PEDCO-120-EL-CN-0003).

2- INCOMING FEEDER SHALL BE PROVIDED WITH CURRENT LIMITING SYSTEM.

LEGEND

- AUTOMATIC CIRCUIT BREAKER MCCB WITH THERMAL MAGNET 4 POLE
- MINIATURE CIRCUIT BREAKER
- RCBO, RESIDUAL CIRCUIT BREAKER WITH OVER CURRENT PROTECTION
- PHOTO CELL
- FUSE
- SIGNAL LAMP

REFERENCE DRAWING	DRC. No.
ELECTRICAL OVERALL SINGLE LINE DIAGRAM	BK-GCS-PEDCO-120-EL-SL-0001
LIGHTING & SMALL POWER LAYOUT FOR BUILDING & SHELTER	BK-GCS-PEDCO-120-EL-PY-0004
AREA LIGHTING & SMALL POWER LAYOUT	BK-GCS-PEDCO-120-EL-PY-0003
DATA SHEETS FOR DISTRIBUTION & LIGHTING PANELS	BK-GCS-PEDCO-120-EL-DT-0016

KEY PLAN

REV.	DATE	P.O.I.S	PREP.	CHK.	APP.	AUT.
D00	JUN.2023	IFC	H.NAKAIRA	M.FARHANIAN	A.M.MOHSENI	**.**

REV.	DESCRIPTION	BY	DATE	BY	DATE
		CHECKED		REV. APPR.	
***	**********	**.**	***.****	**.**	***.****

PROJECT NAME: BINAK OILFIELD DEVELOPMENT/SURFACE FACILITIES GAS COMPRESSOR STATION

PROJECT NO.: 971020

EPC CONTRACTOR: HIRGAN ENERGY – DESIGN & INSPECTION COMPANIES

EPD/EPC CONTRACTOR (CC): PEDCO — PETROIRAN DEVELOPMENT COMPANY

اصل و کلیه نسخ این نقشه و حق افتباس متعلق به شرکت ملی مناطق نفت خیز جنوب میباشد.

THE ORIGINAL AND ALL COPIES OF THIS DRAWING TOGETHER WITH THE COPYRIGHT THEREIN ARE THE SOLE PROPERTY OF N.I.S.O.C./ FIELDS

BINAK OILFIELD DEVELOPMENT
SURFACE FACILITIES
GAS COMPRESSOR STATION

DATE	SCALE	DRAWING BY	CHECKED BY	PROJECT ENG.

(VENDOR TITLE BLOCK)**

DRAWING TITLE: DISTRIBUTION AND LIGHTING PANELS SINGLE LINE DIAGRAM

NO CONSTRUCTION PERMITTED UNLESS DRAWING APPROVED

APPROVED FOR CONSTRUCTION | BY: | DATE:

SCALE	SIZE	DRAWING NO.	SHEET NO.	REV.	BUDGET REF.	LOCATION	SIZE	CLASS	SERIAL NO.	SHEET	REVISION
NTS	A3	BK-GCS-PEDCO-120-EL-SL-0004	08 OF 08	D00	063-073-9184	P	2	P	709037	08 OF 08	D00