INSTRUMENT LOCATION LAYOUT

NOTES

LEGEND

REFERENCE DRAWING	DRG. No.

KEY PLAN

REV.	DATE	P.O.I.S	PREP.	CHK.	APP.	AUT.
D01	JUL.2023	IFA	P.Hajizadeghi	M.FAKHARIAN	A.M.MOHSENI	**.**
D00	AGU.2022	IFC	P.Hajizadeghi	M.FAKHARIAN	M.MEHRSHAD	**.**

REV.	DESCRIPTION	BY	DATE	BY	DATE
***	**********	**.**	***.****	**.**	***.****
		CHECKED		REV. APPR.	

اصل و کلیه نسخ این نقشه و حق اقتباس متعلق به شرکت ملی مناطق نفت خیز جنوب میباشد.

THE ORIGINAL AND ALL COPIES OF THIS DRAWING TOGETHER WITH THE COPYRIGHT THEREIN ARE THE SOLE PROPERTY OF N.I.S.O.C./ FIELDS

PROJECT NAME: BINAK OILFIELD DEVELOPMENT/SURFACE FACILITIES GAS COMPRESSOR STATION

PROJECT NO.: 971020

EPC CONTRACTOR: HIRGAN ENERGY – DESIGN & INSPECTION COMPANIES

EPD/EPC CONTRACTOR (GC): PETROIRAN DEVELOPMENT COMPANY (PEDCO)

BINAK OILFIELD DEVELOPMENT
SURFACE FACILITIES
GAS COMPRESSOR STATION

DATE	SCALE	DRAWING BY	CHECKED BY	PROJECT ENG.

(VENDOR TITLE BLOCK)**

DRAWING TITLE: INSTRUMENT LOCATION LAYOUT

NO CONSTRUCTION PERMITTED UNLESS DRAWING APPROVED

APPROVED FOR CONSTRUCTION BY: DATE:

SCALE	SIZE	DRAWING NO.	SHEET NO.	REV.	BUDGET REF.	LOCATION	SIZE	CLASS	SERIAL NO.	SHEET	REVISION
N.T.S	A3	BK-GCS-PEDCO-120-IN-PY-0003	01 OF 21	D01	0-53-073-9184	F	2	J	708958	01 OF 20	D01

RECORD SHEET

Page \ Rev.	D00	D01	D02	D03	D04	Page \ Rev.	D00	D01	D02	D03	D04	Page \ Rev.	D00	D01	D02	D03	D04	Page \ Rev.	D00	D01	D02	D03	D04
1	X	X				36						71						106					
2	X	X				37						72						107					
3	X	X				38						73						108					
4	X	X				39						74						109					
5	X	X				40						75						110					
6	X	X				41						76						111					
7	X	X				42						77						112					
8	X	X				43						78						113					
9	X	X				44						79						114					
10	X	X				45						80						115					
11	X	X				46						81						116					
12	X	X				47						82						117					
13	X	X				48						83						118					
14	X	X				49						84						119					
15	X	X				50						85						120					
16	X	X				51						86						121					
17	X	X				52						87						122					
18	X	X				53						88						123					
19	X	X				54						89						124					
20		X				55						90						125					
21		X				56						91						126					
22						57						92						127					
23						58						93						128					
24						59						94						129					
25						60						95						130					
26						61						96						131					
27						62						97						132					
28						63						98						133					
29						64						99						134					
30						65						100						135					
31						66						101						136					
32						67						102						137					
33						68						103						138					
34						69						104						139					
35						70						105						140					

NOTES

LEGEND

REFERENCE DRAWING	DRG. No.

KEY PLAN

REV.	DATE	P.O.I.S	PREP.	CHK.	APP.	AUT.
D01	JUL.2023	IFA	P.Hajizadeghi	M.FAKHARIAN	A.M.MOESENI	**.**
D00	AGU.2022	IFC	P.Hajizadeghi	M.FAKHARIAN	M.MEHRSHAD	**.**

REV.	DESCRIPTION	BY	DATE	BY	DATE
***	**********	**.**	***.****	**.**	***.****
		CHECKED		REV. APPR.	

PROJECT NAME: BINAK OILFIELD DEVELOPMENT/SURFACE FACILITIES GAS COMPRESSOR STATION

PROJECT NO.: 971020

EPC CONTRACTOR: HIRGAN ENERGY – DESIGN & INSPECTION COMPANIES

EPD/EPC CONTRACTOR (GC): PETROIRAN DEVELOPMENT COMPANY — PEDCO

اصل و کلیه نسخ این نقشه و حق اقتباس متعلق به شرکت ملی مناطق نفت خیز جنوب میباشد.

THE ORIGINAL AND ALL COPIES OF THIS DRAWING TOGETHER WITH THE COPYRIGHT THEREIN ARE THE SOLE PROPERTY OF N.I.S.O.C./ FIELDS

BINAK OILFIELD DEVELOPMENT
SURFACE FACILITIES
GAS COMPRESSOR STATION

DATE	SCALE	DRAWING BY	CHECKED BY	PROJECT ENG.

(VENDOR TITLE BLOCK)**

DRAWING TITLE: INSTRUMENT LOCATION LAYOUT

NO CONSTRUCTION PERMITTED UNLESS DRAWING APPROVED

APPROVED FOR CONSTRUCTION BY: DATE:

SCALE	SIZE	DRAWING NO.	SHEET NO.	REV.
N.T.S	A3	BK-GCS-PEDCO-120-IN-PY-0003	02 OF 21	D01

BUDGET REF.	LOCATION	SIZE	CLASS	SERIAL NO.	SHEET	REVISION
0-53-073-9184	F	2	J	708958	02 OF 20	D01

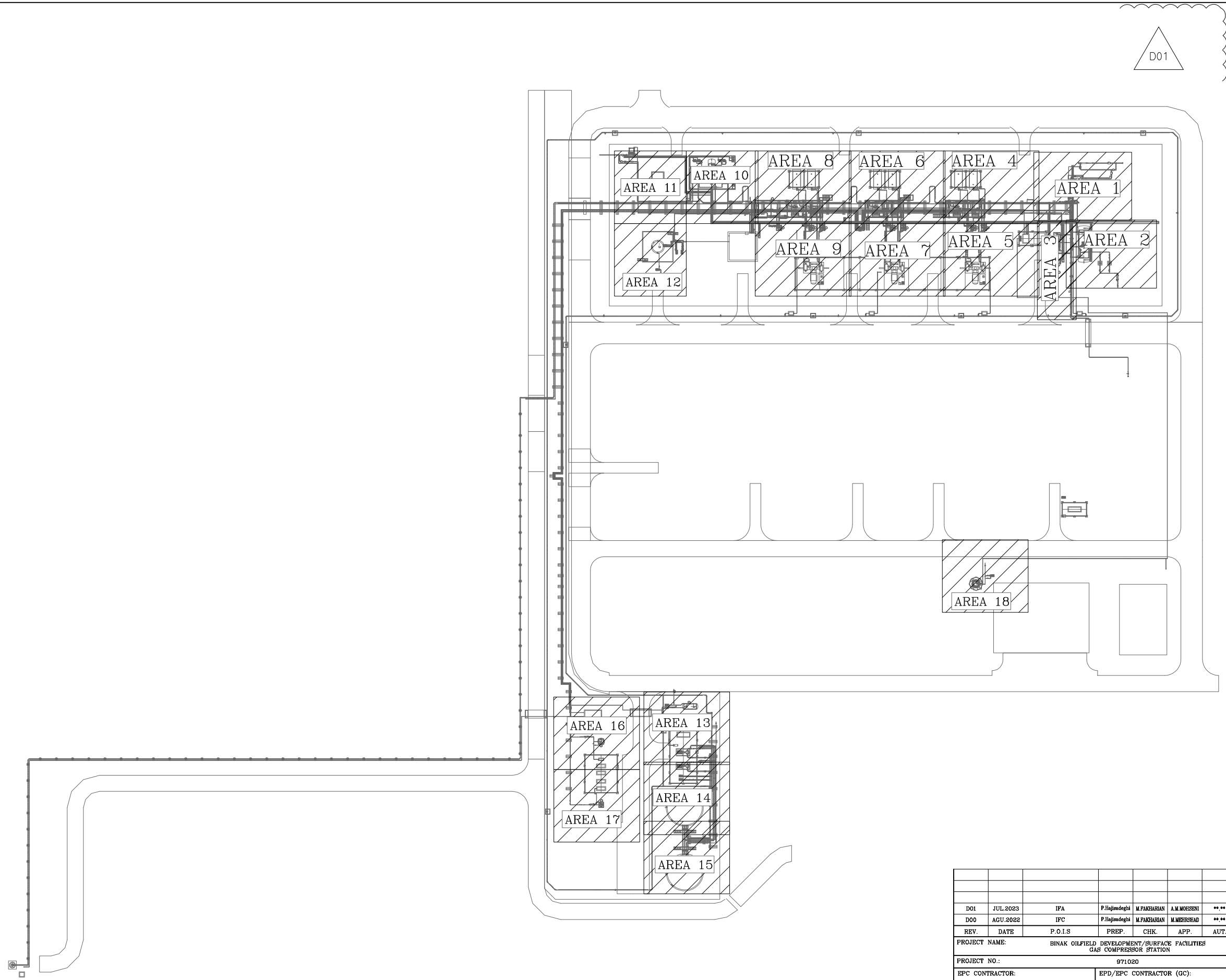

LEGEND

NOTES

LEGEND

REFERENCE DRAWING	DRG. No.

KEY PLAN

REV.	DATE	P.O.I.S	PREP.	CHK.	APP.	AUT.
D01	JUL.2023	IFA	P.Hajimadeghi	M.FAKHARIAN	A.M.MOHSENI	**.**
D00	AGU.2022	IFC	P.Hajimadeghi	M.FAKHARIAN	M.MEHRSHAD	**.**

REV.	DESCRIPTION	BY	DATE	BY	DATE
***	**********	**.**	***.****	**.**	***.****
		CHECKED		REV. APPR.	

PROJECT NAME: BINAK OILFIELD DEVELOPMENT/SURFACE FACILITIES GAS COMPRESSOR STATION

PROJECT NO.: 971020

EPC CONTRACTOR: HIRGAN ENERGY – DESIGN & INSPECTION COMPANIES

EPD/EPC CONTRACTOR (GC): PETROIRAN DEVELOPMENT COMPANY (PEDCO)

اصل و کلیه نسخ این نقشه و حق اقتباس متعلق به شرکت ملی مناطق نفت خیز جنوب میباشد.

THE ORIGINAL AND ALL COPIES OF THIS DRAWING TOGETHER WITH THE COPYRIGHT THEREIN ARE THE SOLE PROPERTY OF N.I.S.O.C./ FIELDS

BINAK OILFIELD DEVELOPMENT
SURFACE FACILITIES
GAS COMPRESSOR STATION

DATE	SCALE	DRAWING BY	CHECKED BY	PROJECT ENG.

NO CONSTRUCTION PERMITTED UNLESS DRAWING APPROVED

APPROVED FOR CONSTRUCTION BY: DATE:

(VENDOR TITLE BLOCK)**

DRAWING TITLE: INSTRUMENT LOCATION LAYOUT

SCALE	SIZE	DRAWING NO.	SHEET NO.	REV.	BUDGET REF.	LOCATION	SIZE	CLASS	SERIAL NO.	SHEET	REVISION
N.T.S	A3	BK-GCS-PEDCO-120-IN-PY-0003	03 OF 21	D01	0-53-073-9184						

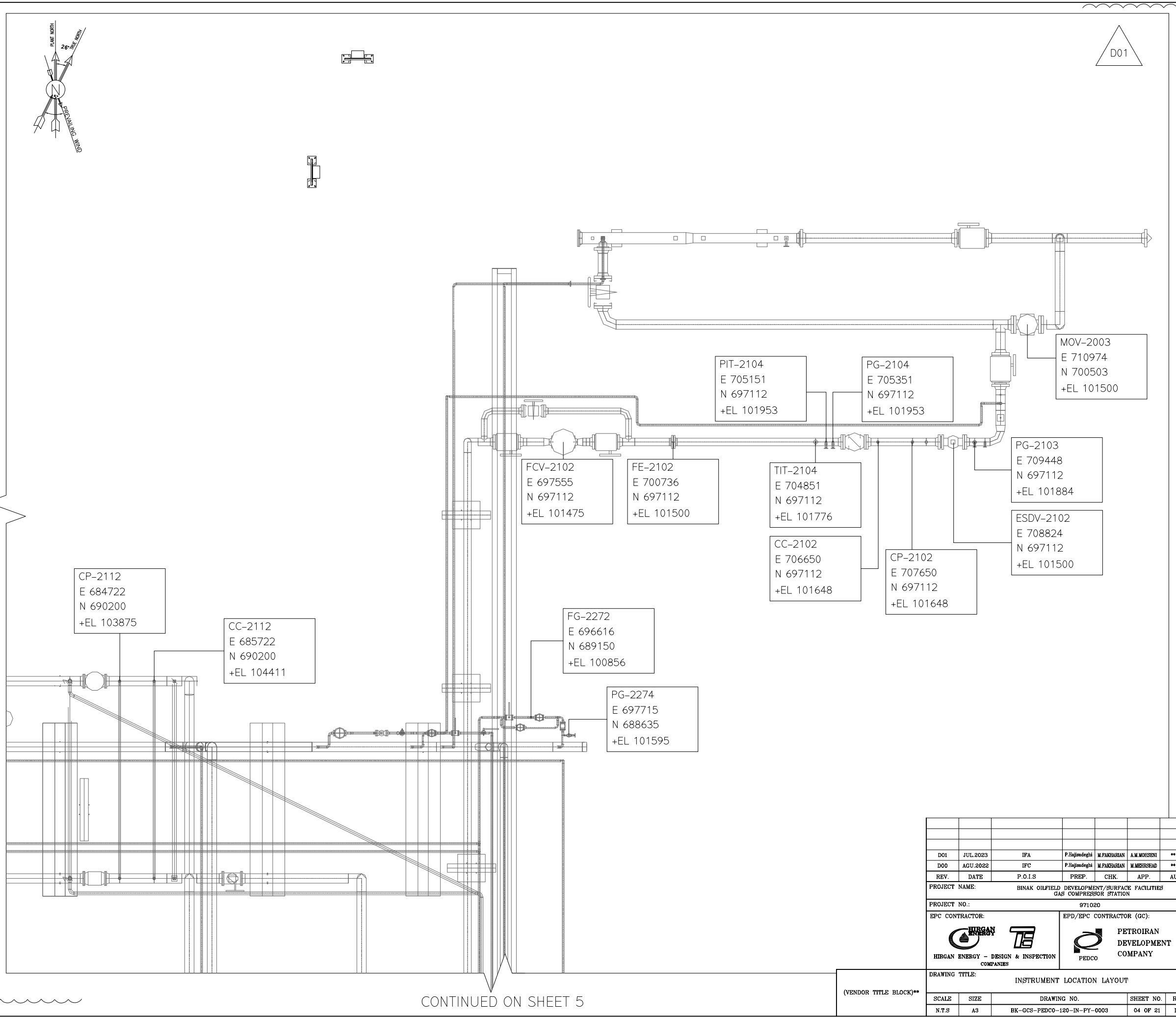

NOTES

LEGEND

REFERENCE DRAWING	DRG. No.
PDMS MODEL REVIEW REPORT (60%)-GCS	BK-GCS-PEDCO-120-PI-0004
INSTRUMENT INDEX	BK-GCS-PEDCO-120-IN-0001

KEY PLAN

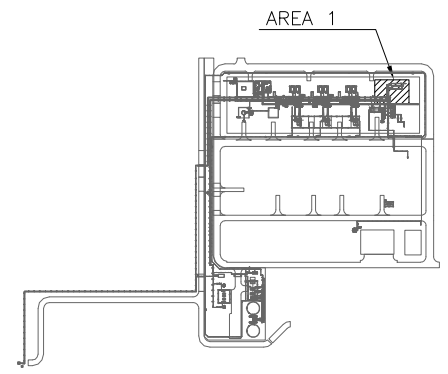

REV.	DATE	P.O.I.S	PREP.	CHK.	APP.	AUT.
D01	JUL.2023	IFA	P.Hajimadeghi	M.FAKHARIAN	A.M.MOESENI	**.**
D00	AGU.2022	IFC	P.Hajimadeghi	M.FAKHARIAN	M.MEHRSHAD	**.**

REV.	DESCRIPTION	BY	DATE	BY	DATE
***	**********	**.**	***.****	**.**	***.****
		CHECKED		REV. APPR.	

PROJECT NAME: BINAK OILFIELD DEVELOPMENT/SURFACE FACILITIES GAS COMPRESSOR STATION

PROJECT NO.: 971020

EPC CONTRACTOR: HIRGAN ENERGY – DESIGN & INSPECTION COMPANIES

EPD/EPC CONTRACTOR (GC): PETROIRAN DEVELOPMENT COMPANY — PEDCO

اصل و کلیه نسخ این نقشه و حق اقتباس متعلق به شرکت ملی مناطق نفت خیز جنوب میباشد.

THE ORIGINAL AND ALL COPIES OF THIS DRAWING TOGETHER WITH THE COPYRIGHT THEREIN ARE THE SOLE PROPERTY OF N.I.S.O.C./ FIELDS

BINAK OILFIELD DEVELOPMENT
SURFACE FACILITIES
GAS COMPRESSOR STATION

DATE	SCALE	DRAWING BY	CHECKED BY	PROJECT ENG.

(VENDOR TITLE BLOCK)**

DRAWING TITLE: INSTRUMENT LOCATION LAYOUT

NO CONSTRUCTION PERMITTED UNLESS DRAWING APPROVED

APPROVED FOR CONSTRUCTION BY: DATE:

SCALE	SIZE	DRAWING NO.	SHEET NO.	REV.
N.T.S	A3	BK-GCS-PEDCO-120-IN-PY-0003	04 OF 21	D01

BUDGET REF.	LOCATION	SIZE	CLASS	SERIAL NO.	SHEET	REVISION
0-53-073-9184	F	2	J	708958	03 OF 20	D01

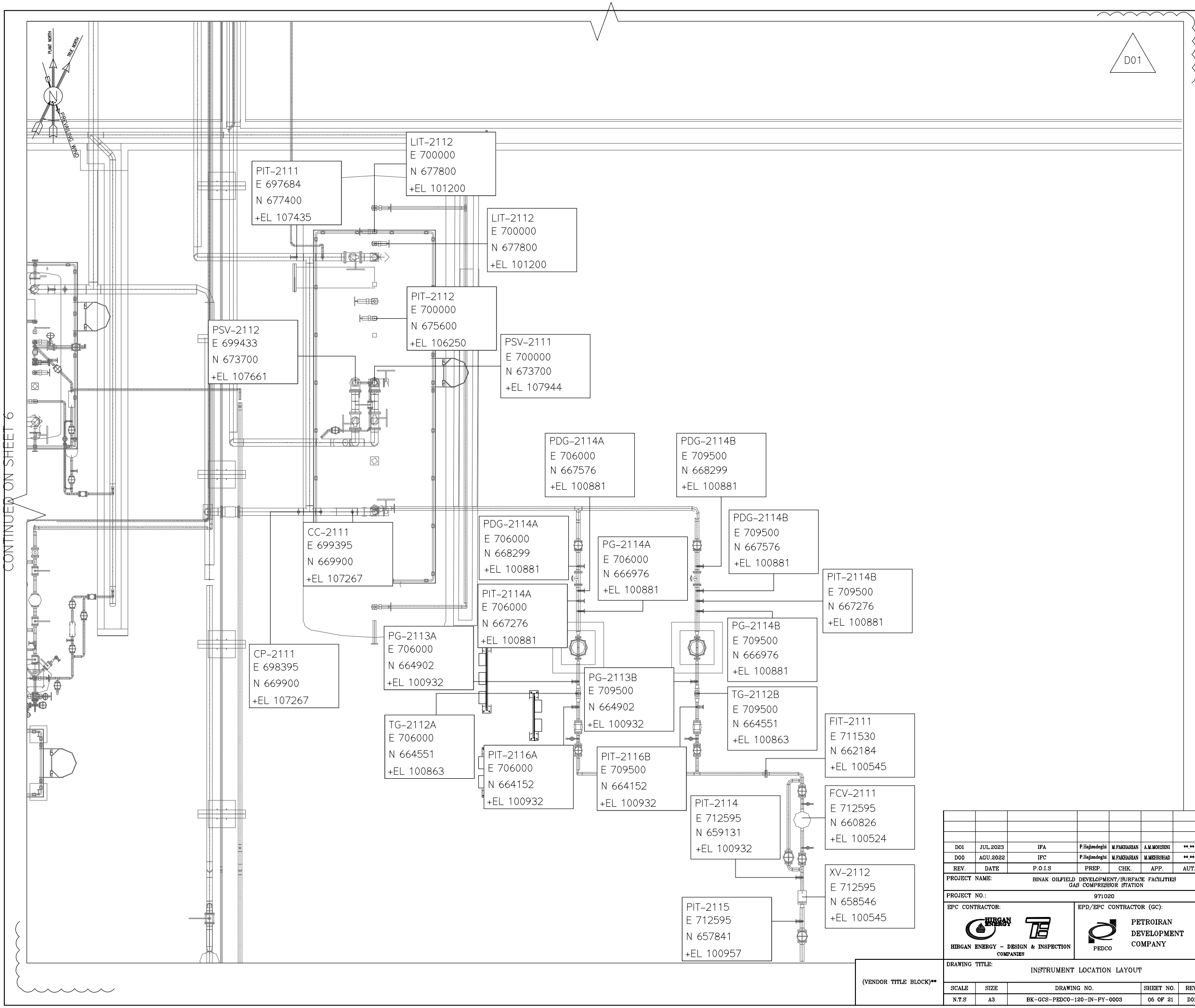

NOTES

LEGEND

REFERENCE DRAWING	DRG. No.
PDMS MODEL REVIEW REPORT (60%)-GCS	BK-GCS-PEDCO-120-PI-0004
INSTRUMENT INDEX	BK-GCS-PEDCO-120-IN-0001

KEY PLAN

AREA 2

REV.	DATE	P.O.I.S	PREP.	CHK.	APP.	AUT.
D01	JUL.2023	IFA	P.Hajizadeghi	M.FAKHARIAN	A.M.MOHSENI	**.**
D00	AGU.2022	IFC	P.Hajizadeghi	M.FAKHARIAN	M.MEHRSHAD	**.**

REV.	DESCRIPTION	BY	DATE	BY	DATE
***	**********	**.**	***.****	**.**	***.****
		CHECKED		REV. APPR.	

PROJECT NAME: BINAK OILFIELD DEVELOPMENT/SURFACE FACILITIES GAS COMPRESSOR STATION

PROJECT NO.: 971020

EPC CONTRACTOR: HIRGAN ENERGY – DESIGN & INSPECTION COMPANIES

EPD/EPC CONTRACTOR (GC): PETROIRAN DEVELOPMENT COMPANY (PEDCO)

اصل و کلیه نسخ این نقشه و حق اقتباس متعلق به شرکت ملی مناطق نفت خیز جنوب میباشد.

THE ORIGINAL AND ALL COPIES OF THIS DRAWING TOGETHER WITH THE COPYRIGHT THEREIN ARE THE SOLE PROPERTY OF N.I.S.O.C./ FIELDS

BINAK OILFIELD DEVELOPMENT
SURFACE FACILITIES
GAS COMPRESSOR STATION

DATE	SCALE	DRAWING BY	CHECKED BY	PROJECT ENG.

(VENDOR TITLE BLOCK)**

DRAWING TITLE: INSTRUMENT LOCATION LAYOUT

NO CONSTRUCTION PERMITTED UNLESS DRAWING APPROVED

APPROVED FOR CONSTRUCTION BY: DATE:

SCALE	SIZE	DRAWING NO.	SHEET NO.	REV.	BUDGET REF.	LOCATION	SIZE	CLASS	SERIAL NO.	SHEET	REVISION
N.T.S	A3	BK-GCS-PEDCO-120-IN-PY-0003	05 OF 21	D01	0-53-073-9184	F	2	J	708958	04 OF 20	D01

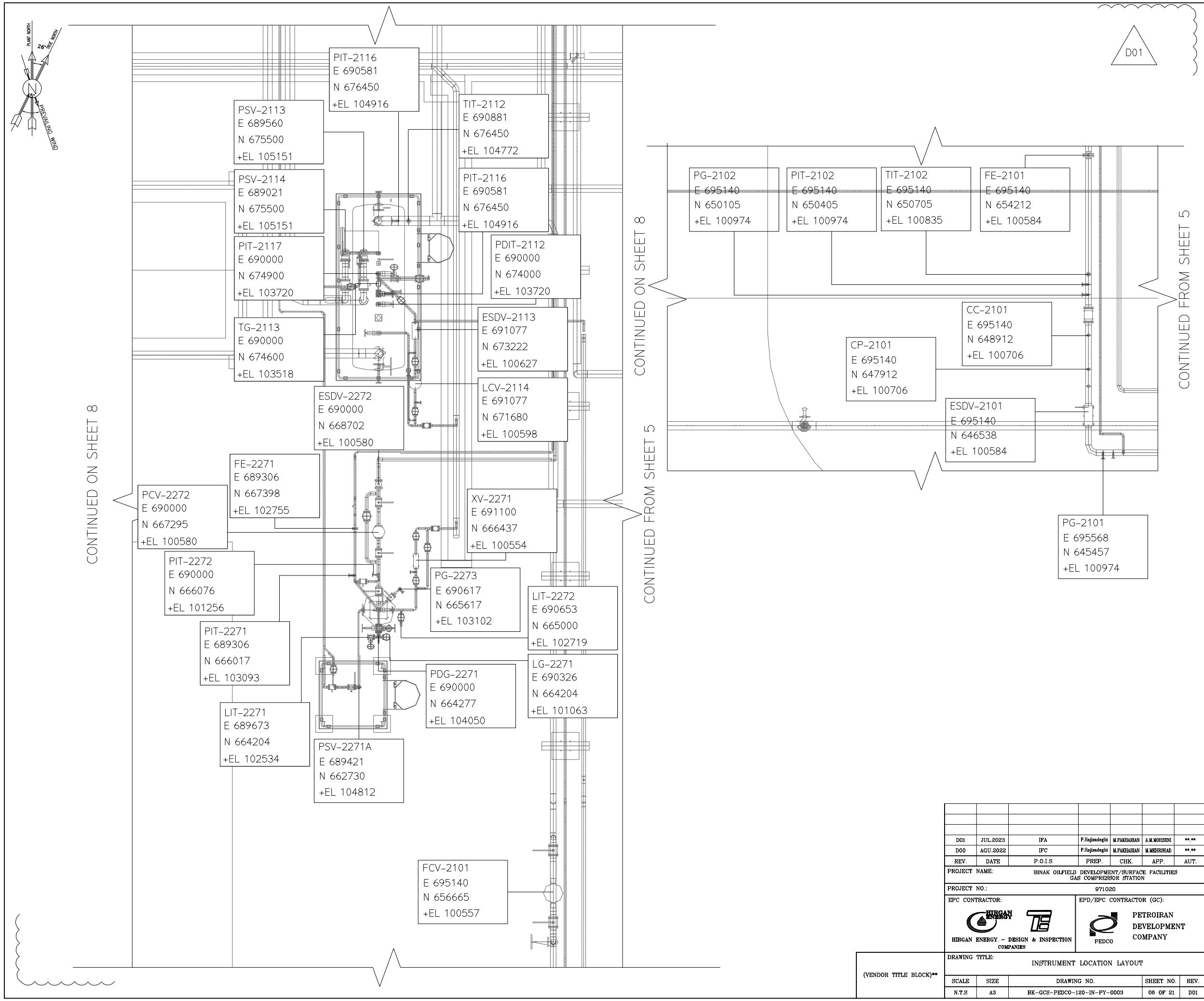

NOTES

LEGEND

REFERENCE DRAWING	DRG. No.
PDMS MODEL REVIEW REPORT (60%)-GCS	BK-GCS-PEDCO-120-PI-0004
INSTRUMENT INDEX	BK-GCS-PEDCO-120-IN-0001

KEY PLAN

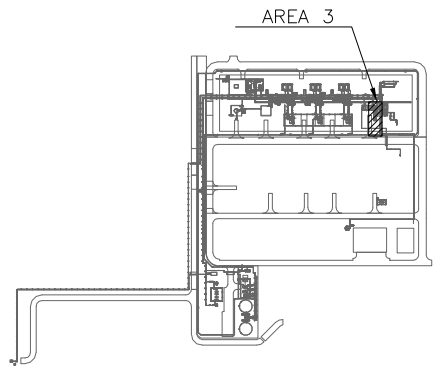

REV.	DATE	P.O.I.S	PREP.	CHK.	APP.	AUT.
D01	JUL.2023	IFA	P.Hajizadeghi	M.FAKHARIAN	A.M.MOHSENI	**.**
D00	AGU.2022	IFC	P.Hajizadeghi	M.FAKHARIAN	M.MEHRSHAD	**.**

REV.	DESCRIPTION	BY	DATE	BY	DATE
***	**********	**.**	***.****	**.**	***.****

PROJECT NAME: BINAK OILFIELD DEVELOPMENT/SURFACE FACILITIES GAS COMPRESSOR STATION

PROJECT NO.: 971020

EPC CONTRACTOR: HIRGAN ENERGY – DESIGN & INSPECTION COMPANIES

EPD/EPC CONTRACTOR (GC): PETROIRAN DEVELOPMENT COMPANY (PEDCO)

اصل و کلیه نسخ این نقشه و حق اقتباس متعلق به شرکت ملی مناطق نفت خیز جنوب میباشد.

THE ORIGINAL AND ALL COPIES OF THIS DRAWING TOGETHER WITH THE COPYRIGHT THEREIN ARE THE SOLE PROPERTY OF N.I.S.O.C./ FIELDS

BINAK OILFIELD DEVELOPMENT
SURFACE FACILITIES
GAS COMPRESSOR STATION

DATE	SCALE	DRAWING BY	CHECKED BY	PROJECT ENG.

NO CONSTRUCTION PERMITTED UNLESS DRAWING APPROVED

APPROVED FOR CONSTRUCTION BY: DATE:

(VENDOR TITLE BLOCK)**

DRAWING TITLE: INSTRUMENT LOCATION LAYOUT

SCALE	SIZE	DRAWING NO.	SHEET NO.	REV.	BUDGET REF.	LOCATION	SIZE	CLASS	SERIAL NO.	SHEET	REVISION
N.T.S	A3	BK-GCS-PEDCO-120-IN-PY-0003	06 OF 21	D01	0-53-073-9184	F	2	J	708958	06 OF 20	D01

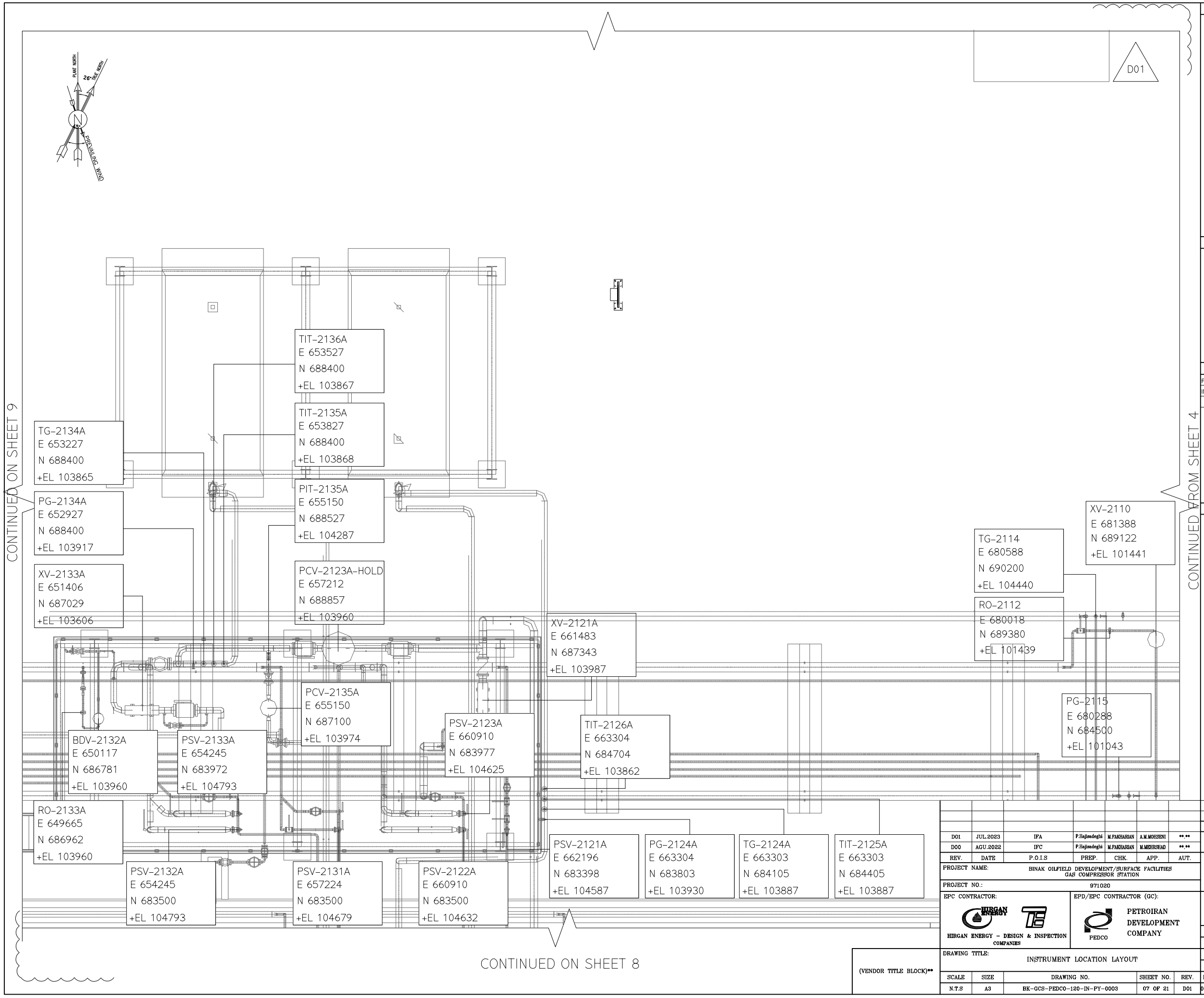

NOTES

LEGEND

REFERENCE DRAWING	DRG. No.
PDMS MODEL REVIEW REPORT (60%)-GCS	BK-GCS-PEDCO-120-PI-0004
INSTRUMENT INDEX	BK-GCS-PEDCO-120-IN-0001

KEY PLAN

AREA 4

REV.	DATE	P.O.I.S	PREP.	CHK.	APP.	AUT.
D01	JUL.2023	IFA	P.Hajimadeghi	M.FAKHARIAN	A.M.MOHSENI	**.**
D00	AGU.2022	IFC	P.Hajimadeghi	M.FAKHARIAN	M.MEHRSHAD	**.**

REV.	DESCRIPTION	BY	DATE	BY	DATE
***	**********	**.**	***.****	**.**	***.****
		CHECKED		REV. APPR.	

PROJECT NAME: BINAK OILFIELD DEVELOPMENT/SURFACE FACILITIES GAS COMPRESSOR STATION

PROJECT NO.: 971020

EPC CONTRACTOR: HIRGAN ENERGY – DESIGN & INSPECTION COMPANIES

EPD/EPC CONTRACTOR (GC): PETROIRAN DEVELOPMENT COMPANY (PEDCO)

اصل و کلیه نسخ این نقشه و حق اقتباس متعلق به شرکت ملی مناطق نفت خیز جنوب میباشد.

THE ORIGINAL AND ALL COPIES OF THIS DRAWING TOGETHER WITH THE COPYRIGHT THEREIN ARE THE SOLE PROPERTY OF N.I.S.O.C./ FIELDS

BINAK OILFIELD DEVELOPMENT
SURFACE FACILITIES
GAS COMPRESSOR STATION

DATE	SCALE	DRAWING BY	CHECKED BY	PROJECT ENG.

NO CONSTRUCTION PERMITTED UNLESS DRAWING APPROVED

APPROVED FOR CONSTRUCTION | BY: | DATE:

(VENDOR TITLE BLOCK)**

DRAWING TITLE: INSTRUMENT LOCATION LAYOUT

SCALE	SIZE	DRAWING NO.	SHEET NO.	REV.
N.T.S	A3	BK-GCS-PEDCO-120-IN-PY-0003	07 OF 21	D01

BUDGET REF.	LOCATION	SIZE	CLASS	SERIAL NO.	SHEET	REVISION
0-53-073-9184	F	2	J	708958	06 OF 20	D01

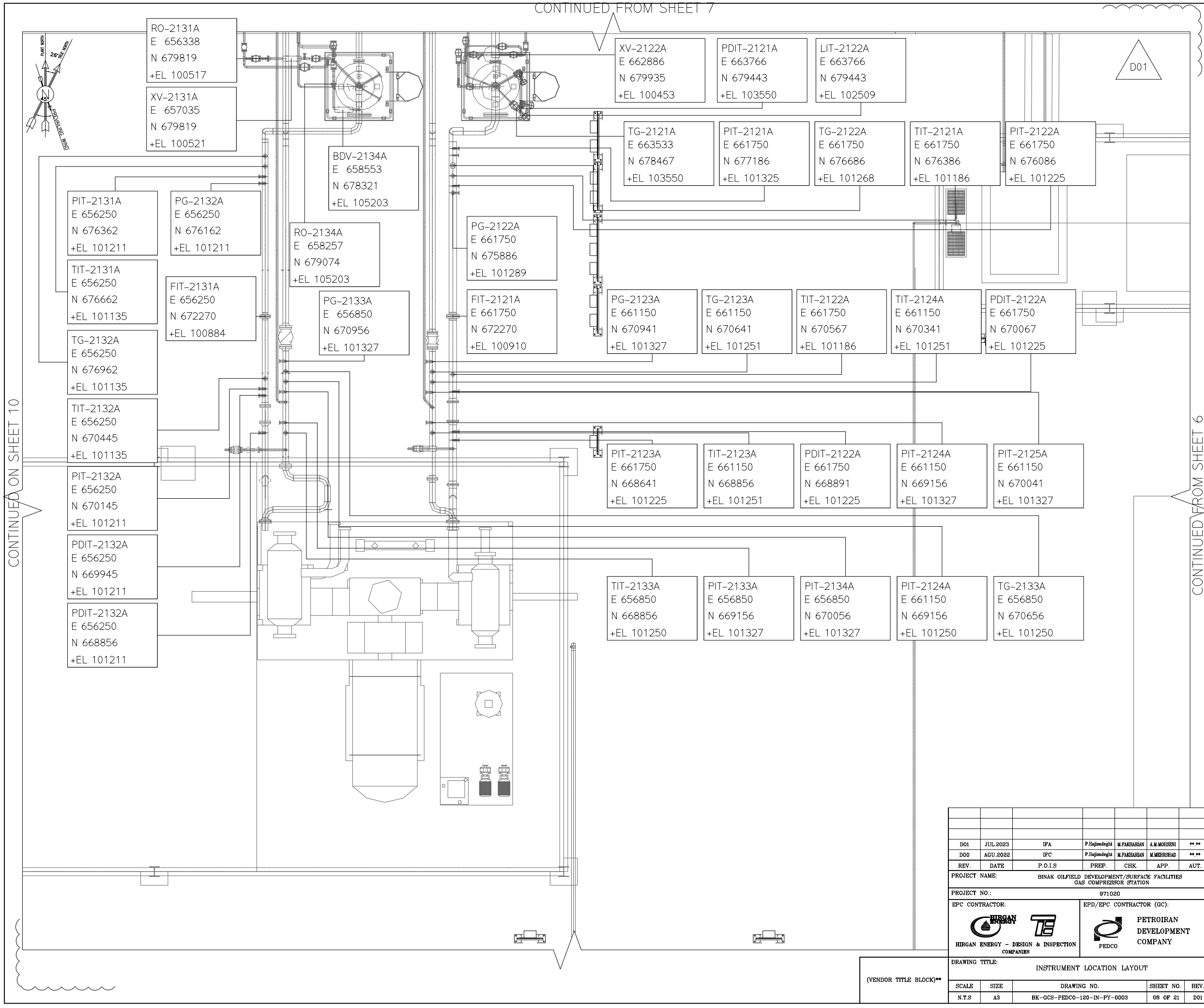

NOTES

LEGEND

REFERENCE DRAWING	DRG. No.
PDMS MODEL REVIEW REPORT (60%)-GCS	BK-GCS-PEDCO-120-PI-0004
INSTRUMENT INDEX	BK-GCS-PEDCO-120-IN-0001

KEY PLAN

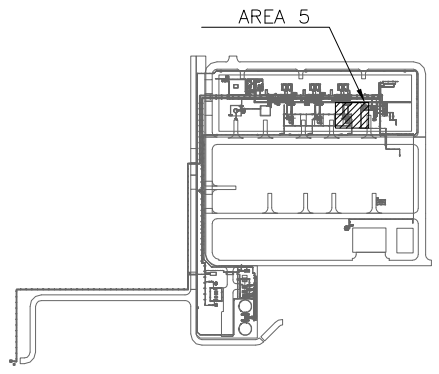

REV.	DATE	P.O.I.S	PREP.	CHK.	APP.	AUT.
D01	JUL.2023	IFA	P.Hajimdeghi	M.FAKHARIAN	A.M.MOHSENI	**.**
D00	AGU.2022	IFC	P.Hajimdeghi	M.FAKHARIAN	M.MEHRSHAD	**.**

REV.	DESCRIPTION	BY	DATE	BY	DATE
		CHECKED		REV. APPR.	
***	**********	**.**	***.****	**.**	***.****

PROJECT NAME: BINAK OILFIELD DEVELOPMENT/SURFACE FACILITIES GAS COMPRESSOR STATION

PROJECT NO.: 971020

EPC CONTRACTOR: HIRGAN ENERGY – DESIGN & INSPECTION COMPANIES

EPD/EPC CONTRACTOR (GC): PETROIRAN DEVELOPMENT COMPANY (PEDCO)

اصل و کلیه نسخ این نقشه و حق اقتباس متعلق به شرکت ملی مناطق نفت خیز جنوب میباشد.

THE ORIGINAL AND ALL COPIES OF THIS DRAWING TOGETHER WITH THE COPYRIGHT THEREIN ARE THE SOLE PROPERTY OF N.I.S.O.C./ FIELDS

BINAK OILFIELD DEVELOPMENT
SURFACE FACILITIES
GAS COMPRESSOR STATION

DATE	SCALE	DRAWING BY	CHECKED BY	PROJECT ENG.

NO CONSTRUCTION PERMITTED UNLESS DRAWING APPROVED

APPROVED FOR CONSTRUCTION BY: DATE:

DRAWING TITLE: INSTRUMENT LOCATION LAYOUT

(VENDOR TITLE BLOCK)**

SCALE	SIZE	DRAWING NO.	SHEET NO.	REV.
N.T.S	A3	BK-GCS-PEDCO-120-IN-PY-0003	08 OF 21	D01

BUDGET REF.	LOCATION	SIZE	CLASS	SERIAL NO.	SHEET	REVISION
0-53-073-9184	F	2	J	708958	07 OF 20	D01

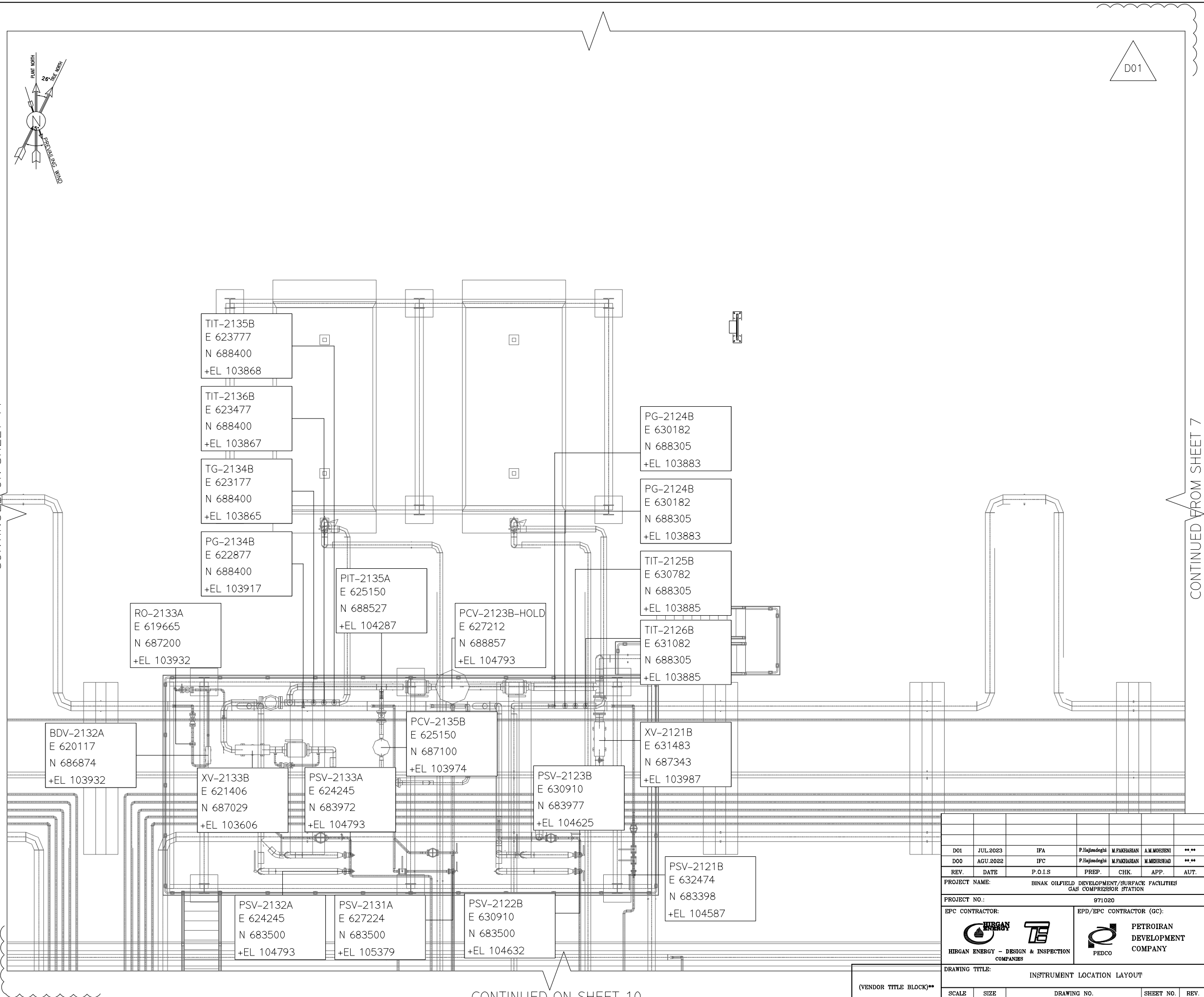

NOTES

LEGEND

REFERENCE DRAWING	DRG. No.
PDMS MODEL REVIEW REPORT (60%)-GCS	BK-GCS-PEDCO-120-PI-0004
INSTRUMENT INDEX	BK-GCS-PEDCO-120-IN-0001

KEY PLAN

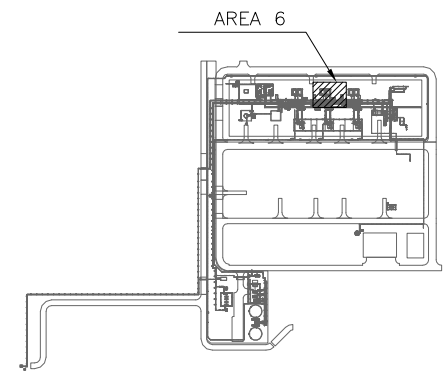

REV.	DATE	P.O.I.S	PREP.	CHK.	APP.	AUT.
D01	JUL.2023	IFA	P.Hajizadeghi	M.FAKHARIAN	A.M.MOHSENI	**.**
D00	AGU.2022	IFC	P.Hajizadeghi	M.FAKHARIAN	M.MEHRSHAD	**.**

REV.	DESCRIPTION	BY	DATE	BY	DATE
***	**********	**.**	***.****	**.**	***.****
		CHECKED		REV. APPR.	

PROJECT NAME: BINAK OILFIELD DEVELOPMENT/SURFACE FACILITIES GAS COMPRESSOR STATION

PROJECT NO.: 971020

EPC CONTRACTOR: HIRGAN ENERGY – DESIGN & INSPECTION COMPANIES

EPD/EPC CONTRACTOR (GC): PEDCO — PETROIRAN DEVELOPMENT COMPANY

اصل و کلیه نسخ این نقشه و حق اقتباس متعلق به شرکت ملی مناطق نفت خیز جنوب میباشد.

THE ORIGINAL AND ALL COPIES OF THIS DRAWING TOGETHER WITH THE COPYRIGHT THEREIN ARE THE SOLE PROPERTY OF N.I.S.O.C./ FIELDS

BINAK OILFIELD DEVELOPMENT
SURFACE FACILITIES
GAS COMPRESSOR STATION

DATE	SCALE	DRAWING BY	CHECKED BY	PROJECT ENG.

(VENDOR TITLE BLOCK)**

DRAWING TITLE: INSTRUMENT LOCATION LAYOUT

NO CONSTRUCTION PERMITTED UNLESS DRAWING APPROVED

APPROVED FOR CONSTRUCTION BY: DATE:

SCALE	SIZE	DRAWING NO.	SHEET NO.	REV.	BUDGET REF.	LOCATION	SIZE	CLASS	SERIAL NO.	SHEET	REVISION
N.T.S	A3	BK-GCS-PEDCO-120-IN-PY-0003	09 OF 21	D01	0-53-073-9184	F	2	J	708958	08 OF 20	D01

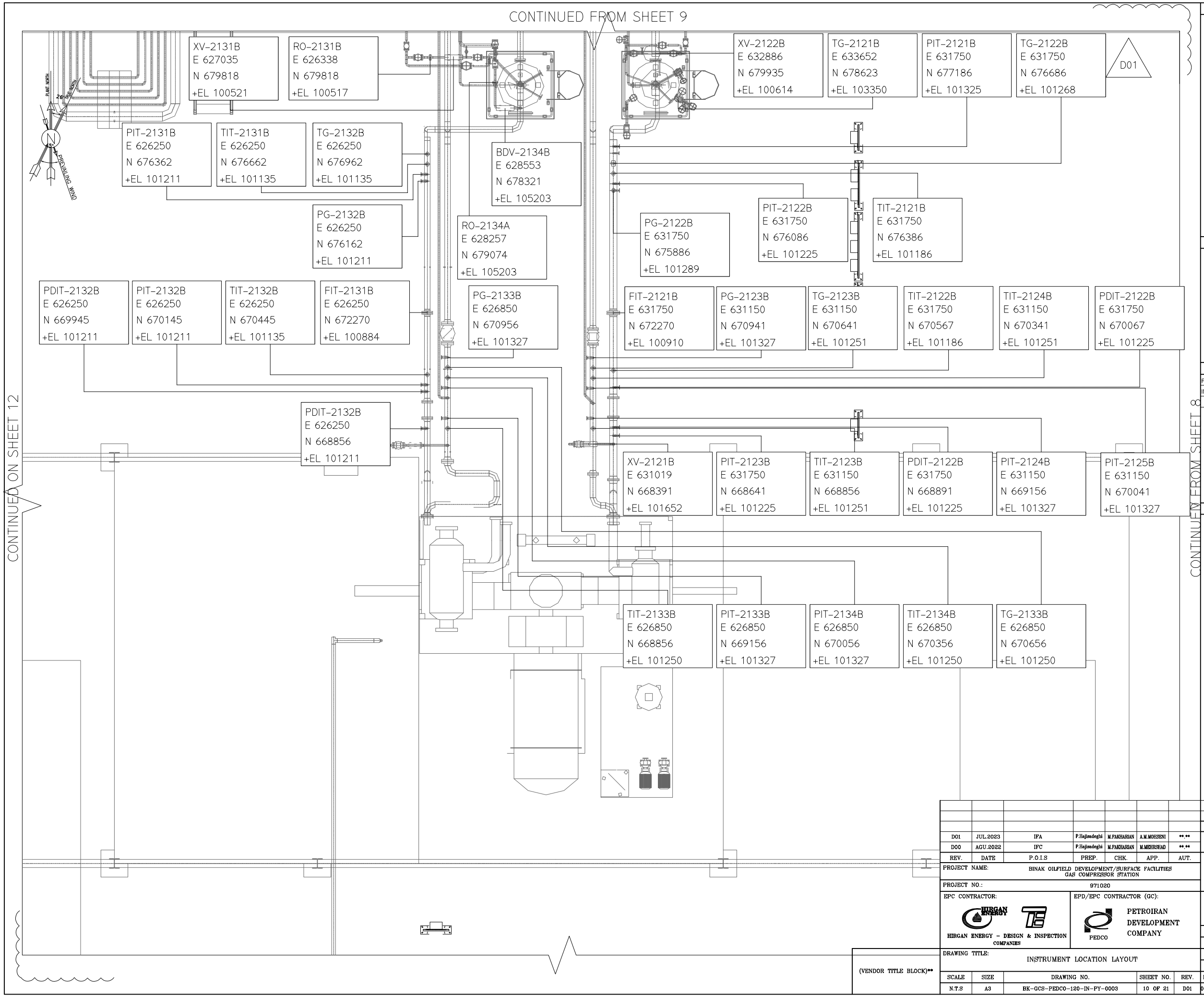

NOTES

LEGEND

REFERENCE DRAWING	DRG. No.
PDMS MODEL REVIEW REPORT (60%)-GCS	BK-GCS-PEDCO-120-PI-0004
INSTRUMENT INDEX	BK-GCS-PEDCO-120-IN-0001

KEY PLAN

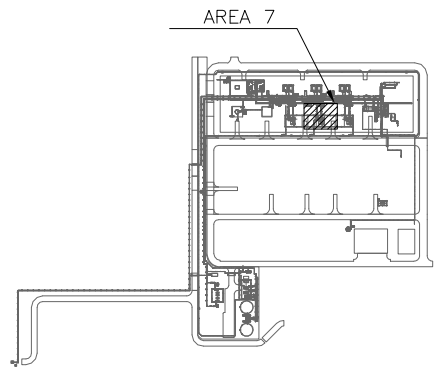

REV.	DATE	P.O.I.S	PREP.	CHK.	APP.	AUT.
D01	JUL.2023	IFA	P.Hajimdeghi	M.FAKHARIAN	A.M.MOHSENI	**.**
D00	AGU.2022	IFC	P.Hajimdeghi	M.FAKHARIAN	M.MEHRSHAD	**.**

REV.	DESCRIPTION	BY	DATE	BY	DATE
***	**********	**.**	***.****	**.**	***.****
		CHECKED		REV. APPR.	

PROJECT NAME: BINAK OILFIELD DEVELOPMENT/SURFACE FACILITIES GAS COMPRESSOR STATION

PROJECT NO.: 971020

EPC CONTRACTOR: HIRGAN ENERGY – DESIGN & INSPECTION COMPANIES

EPD/EPC CONTRACTOR (GC): PETROIRAN DEVELOPMENT COMPANY (PEDCO)

اصل و کلیه نسخ این نقشه و حق اقتباس متعلق به شرکت ملی مناطق نفت خیز جنوب میباشد.

THE ORIGINAL AND ALL COPIES OF THIS DRAWING TOGETHER WITH THE COPYRIGHT THEREIN ARE THE SOLE PROPERTY OF N.I.S.O.C./ FIELDS

BINAK OILFIELD DEVELOPMENT
SURFACE FACILITIES
GAS COMPRESSOR STATION

DATE	SCALE	DRAWING BY	CHECKED BY	PROJECT ENG.

DRAWING TITLE: INSTRUMENT LOCATION LAYOUT

(VENDOR TITLE BLOCK)**

NO CONSTRUCTION PERMITTED UNLESS DRAWING APPROVED

APPROVED FOR CONSTRUCTION BY: DATE:

SCALE	SIZE	DRAWING NO.	SHEET NO.	REV.
N.T.S	A3	BK-GCS-PEDCO-120-IN-PY-0003	10 OF 21	D01

BUDGET REF.	LOCATION	SIZE	CLASS	SERIAL NO.	SHEET	REVISION
0-53-073-9184	F	2	J	708958	09 OF 20	D01

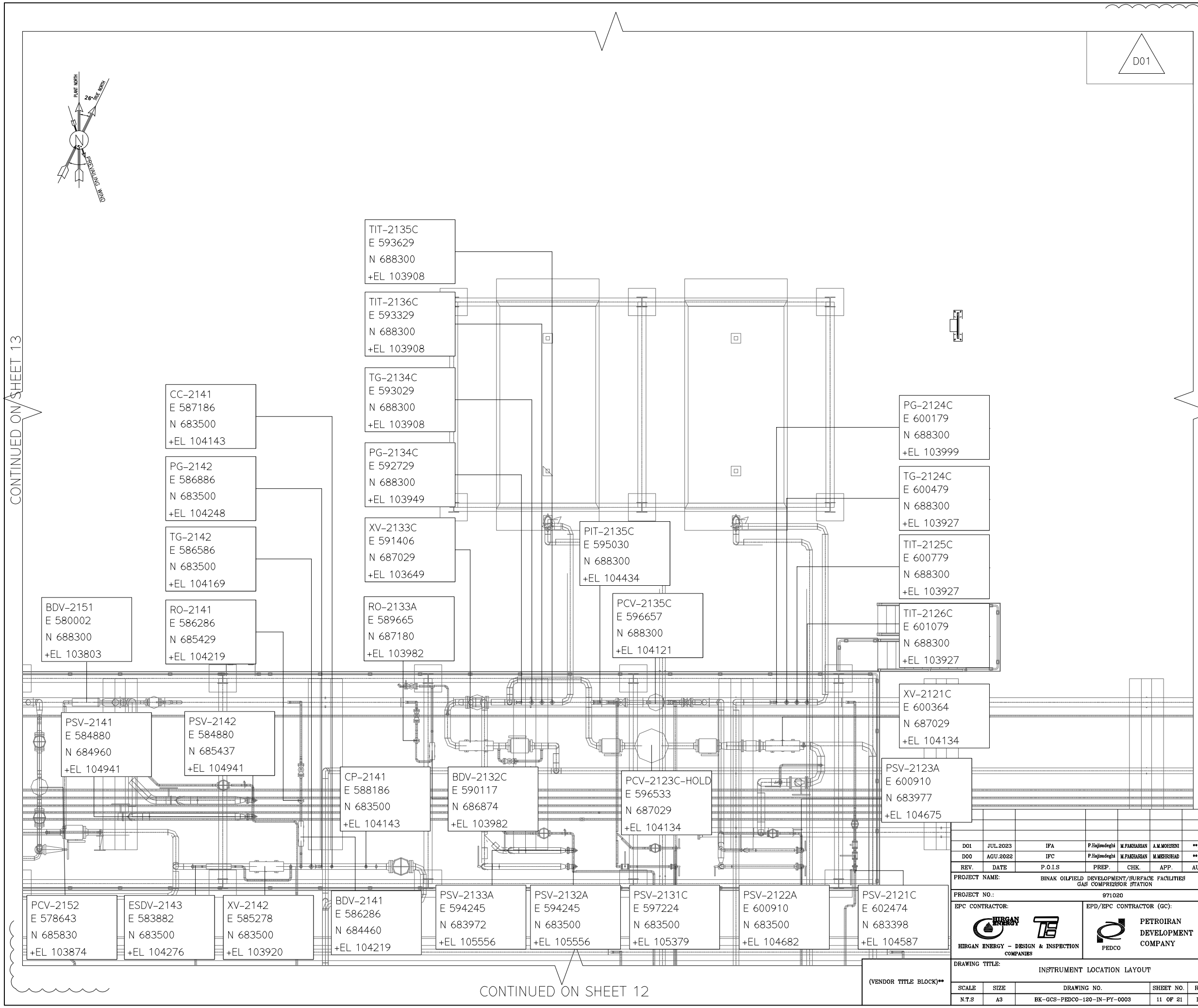

(VENDOR TITLE BLOCK)**

NOTES

LEGEND

REFERENCE DRAWING	DRG. No.
PDMS MODEL REVIEW REPORT (60%)-GCS	BK-GCS-PEDCO-120-PI-0004
INSTRUMENT INDEX	BK-GCS-PEDCO-120-IN-0001

KEY PLAN

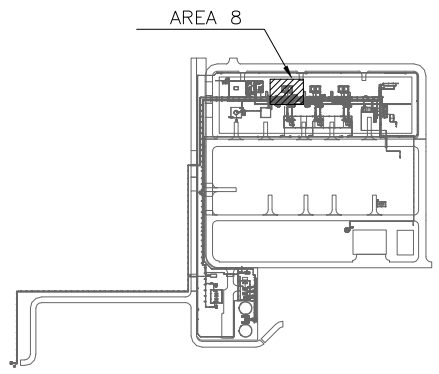

REV.	DESCRIPTION	BY	DATE	BY	DATE
***	**********	** **	*** ****	** **	*** ****
		CHECKED		REV. APPR.	

REV.	DATE	P.O.I.S	PREP.	CHK.	APP.	AUT.
D01	JUL.2023	IFA	P.Hajisadeghi	M.PAKHARIAN	A.M.MOHSENI	** **
D00	AGU.2022	IFC	P.Hajisadeghi	M.PAKHARIAN	M.MEHRSHAD	** **

PROJECT NAME: BINAK OILFIELD DEVELOPMENT/SURFACE FACILITIES GAS COMPRESSOR STATION

PROJECT NO.: 971020

EPC CONTRACTOR: HIRGAN ENERGY – DESIGN & INSPECTION COMPANIES

EPD/EPC CONTRACTOR (GC): PEDCO — PETROIRAN DEVELOPMENT COMPANY

DRAWING TITLE: INSTRUMENT LOCATION LAYOUT

SCALE	SIZE	DRAWING NO.	SHEET NO.	REV.
N.T.S	A3	BK-GCS-PEDCO-120-IN-PY-0003	11 OF 21	D01

اصل و کلیه نسخ این نقشه و حق اقتباس متعلق به شرکت ملی مناطق نفت خیز جنوب میباشد.

THE ORIGINAL AND ALL COPIES OF THIS DRAWING TOGETHER WITH THE COPYRIGHT THEREIN ARE THE SOLE PROPERTY OF N.I.S.O.C./ FIELDS

BINAK OILFIELD DEVELOPMENT
SURFACE FACILITIES
GAS COMPRESSOR STATION

DATE	SCALE	DRAWING BY	CHECKED BY	PROJECT ENG.

NO CONSTRUCTION PERMITTED UNLESS DRAWING APPROVED

APPROVED FOR CONSTRUCTION BY: DATE:

BUDGET REF.	LOCATION	SIZE	CLASS	SERIAL NO.	SHEET	REVISION
0-53-073-9184	F	2	J	708958	10 OF 20	D01

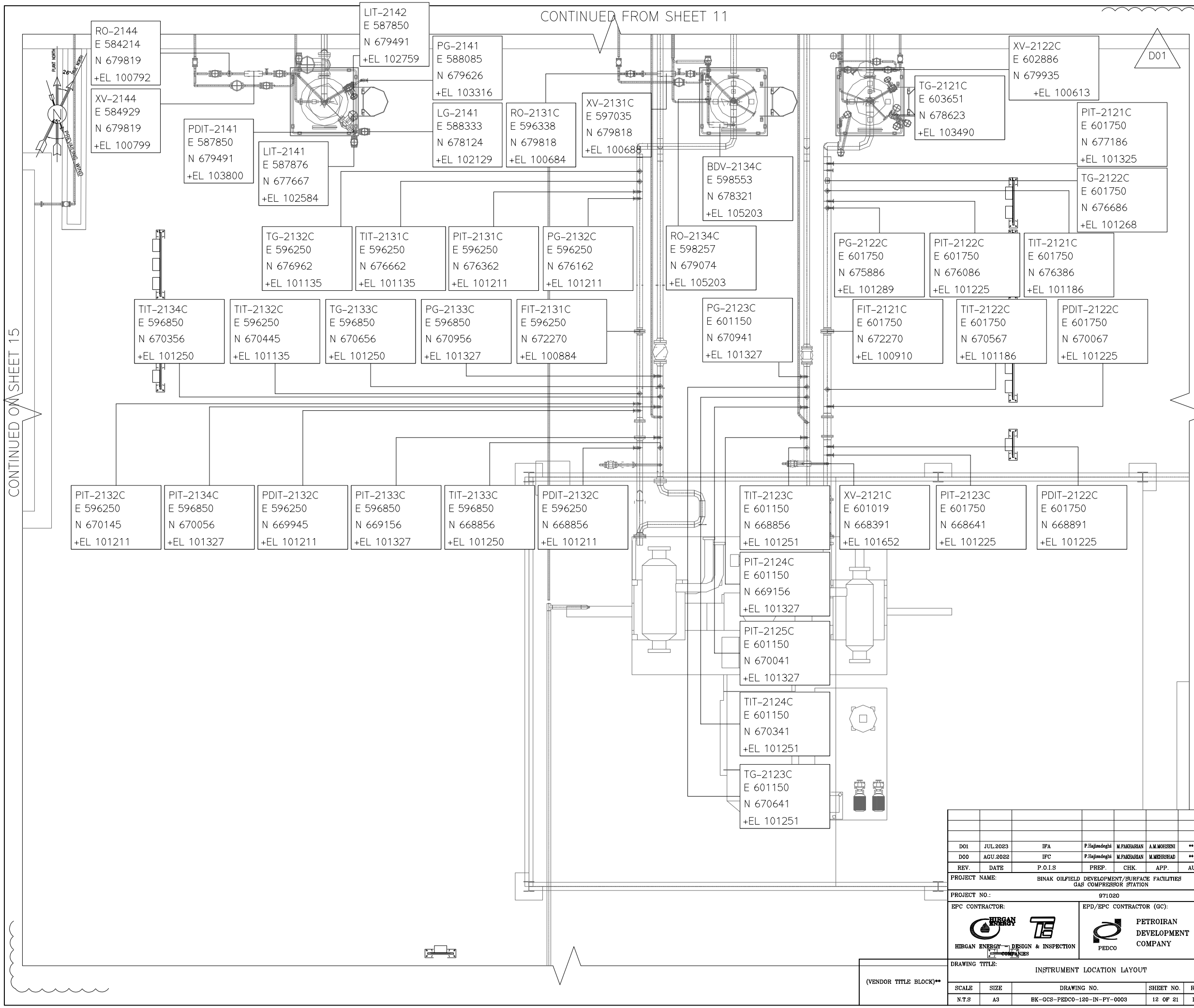

NOTES

LEGEND

REFERENCE DRAWING	DRG. No.
PDMS MODEL REVIEW REPORT (60%)-GCS	BK-GCS-PEDCO-120-PI-0004
INSTRUMENT INDEX	BK-GCS-PEDCO-120-IN-0001

KEY PLAN

AREA 9

REV.	DATE	P.O.I.S	PREP.	CHK.	APP.	AUT.
D01	JUL.2023	IFA	P.Hajimadeghi	M.FAKHARIAN	A.M.MOHSENI	**.**
D00	AGU.2022	IFC	P.Hajimadeghi	M.FAKHARIAN	M.MEHRSHAD	**.**

REV.	DESCRIPTION	BY	DATE	BY	DATE
***	**********	**.**	***.****	**.**	***.****
		CHECKED		REV. APPR.	

PROJECT NAME: BINAK OILFIELD DEVELOPMENT/SURFACE FACILITIES GAS COMPRESSOR STATION

PROJECT NO.: 971020

EPC CONTRACTOR: HIRGAN ENERGY — DESIGN & INSPECTION COMPANIES

EPD/EPC CONTRACTOR (GC): PEDCO — PETROIRAN DEVELOPMENT COMPANY

DRAWING TITLE: INSTRUMENT LOCATION LAYOUT

(VENDOR TITLE BLOCK)**

SCALE	SIZE	DRAWING NO.	SHEET NO.	REV.
N.T.S	A3	BK-GCS-PEDCO-120-IN-PY-0003	12 OF 21	D01

اصل و کلیه نسخ این نقشه و حق اقتباس متعلق به شرکت ملی مناطق نفت خیز جنوب میباشد.

THE ORIGINAL AND ALL COPIES OF THIS DRAWING TOGETHER WITH THE COPYRIGHT THEREIN ARE THE SOLE PROPERTY OF N.I.S.O.C./ FIELDS

BINAK OILFIELD DEVELOPMENT
SURFACE FACILITIES
GAS COMPRESSOR STATION

DATE	SCALE	DRAWING BY	CHECKED BY	PROJECT ENG.

NO CONSTRUCTION PERMITTED UNLESS DRAWING APPROVED

APPROVED FOR CONSTRUCTION BY: DATE:

BUDGET REF.	LOCATION	SIZE	CLASS	SERIAL NO.	SHEET	REVISION
0-53-073-9184	F	2	J	708958	11 OF 20	D01

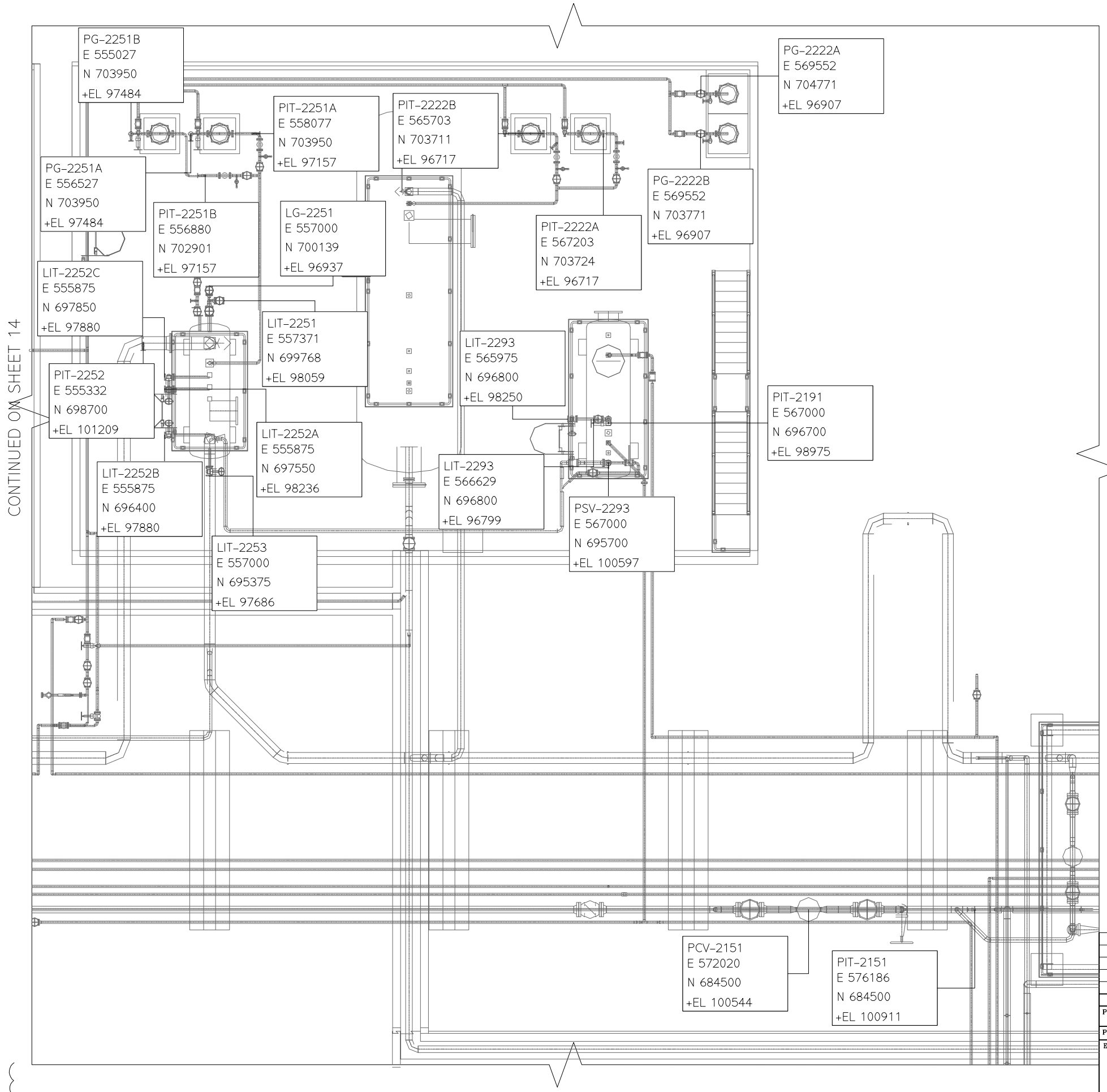

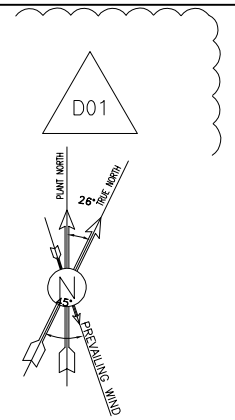

NOTES

LEGEND

REFERENCE DRAWING	DRG. No.
PDMS MODEL REVIEW REPORT (60%)-GCS	BK-GCS-PEDCO-120-PI-0004
INSTRUMENT INDEX	BK-GCS-PEDCO-120-IN-0001

KEY PLAN

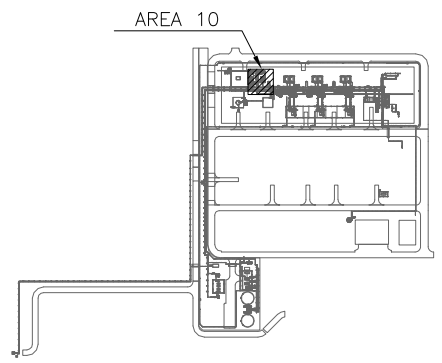

REV.	DATE	P.O.I.S	PREP.	CHK.	APP.	AUT.
D01	JUL.2023	IFA	P.Hajimadeghi	M.FAKHARIAN	A.M.MOHSENI	**.**
D00	AGU.2022	IFC	P.Hajimadeghi	M.FAKHARIAN	M.MEHRSHAD	**.**

REV.	DESCRIPTION	BY	DATE	BY	DATE
***	**********	**.**	***.****	**.**	***.****
		CHECKED		REV. APPR.	

PROJECT NAME: BINAK OILFIELD DEVELOPMENT/SURFACE FACILITIES GAS COMPRESSOR STATION

PROJECT NO.: 971020

EPC CONTRACTOR: HIRGAN ENERGY – DESIGN & INSPECTION COMPANIES

EPD/EPC CONTRACTOR (GC): PEDCO — PETROIRAN DEVELOPMENT COMPANY

اصل و کلیه نسخ این نقشه و حق اقتباس متعلق به شرکت ملی مناطق نفت خیز جنوب میباشد.

THE ORIGINAL AND ALL COPIES OF THIS DRAWING TOGETHER WITH THE COPYRIGHT THEREIN ARE THE SOLE PROPERTY OF N.I.S.O.C./ FIELDS

BINAK OILFIELD DEVELOPMENT
SURFACE FACILITIES
GAS COMPRESSOR STATION

DATE	SCALE	DRAWING BY	CHECKED BY	PROJECT ENG.

(VENDOR TITLE BLOCK)**

DRAWING TITLE: INSTRUMENT LOCATION LAYOUT

NO CONSTRUCTION PERMITTED UNLESS DRAWING APPROVED

APPROVED FOR CONSTRUCTION BY: DATE:

SCALE	SIZE	DRAWING NO.	SHEET NO.	REV.
N.T.S	A3	BK-GCS-PEDCO-120-IN-PY-0003	13 OF 21	D01

BUDGET REF.	LOCATION	SIZE	CLASS	SERIAL NO.	SHEET	REVISION
0-53-073-9184	F	2	J	708958	12 OF 20	D01

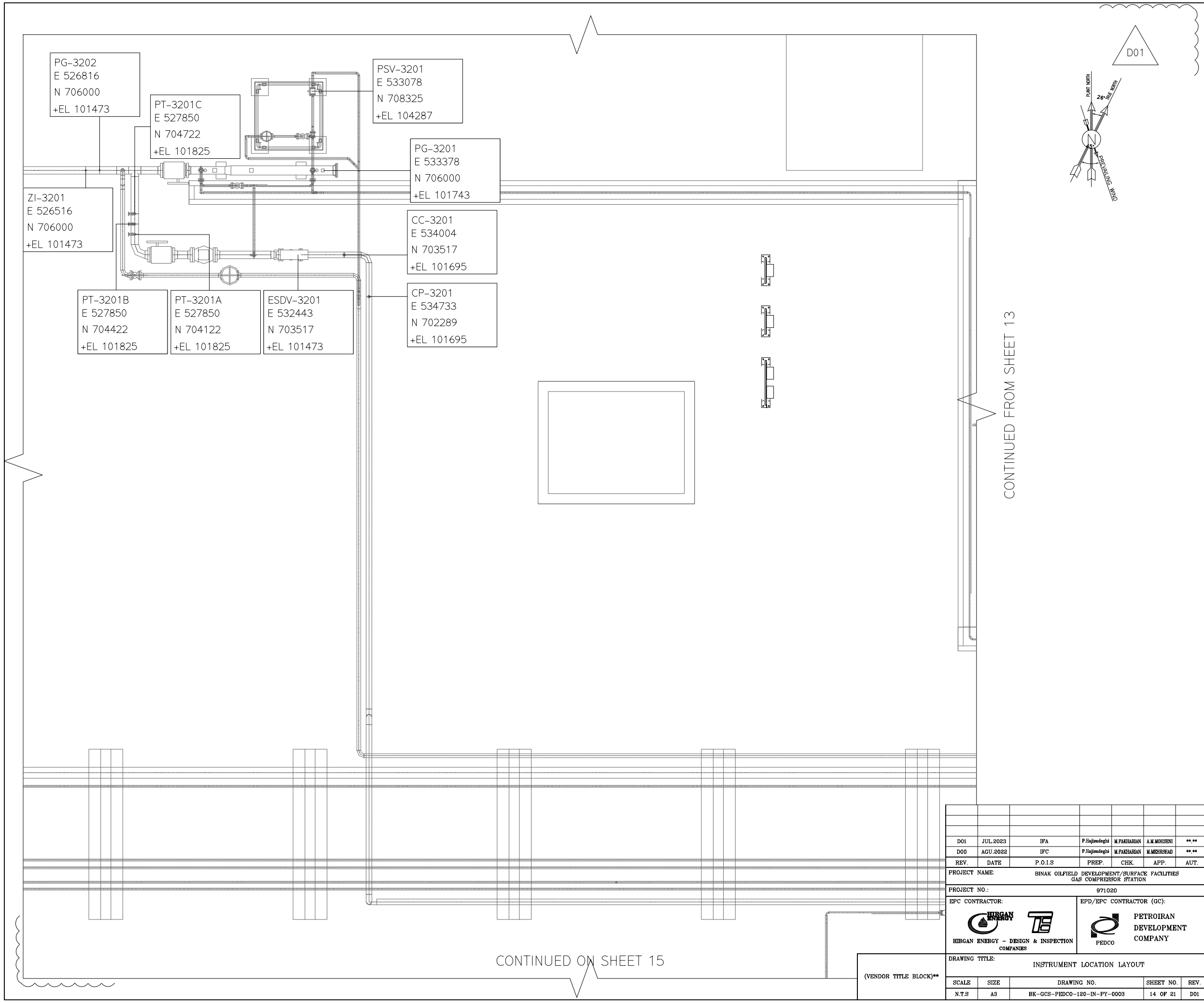

NOTES

1- INSTRUMENT RELATED TO GAS PIPELINE (PIG LAUNCHER AREA) WILL BE PURCHASED IN PIPELINE WORK PACKAGE OF THIS PROJECT.

LEGEND

REFERENCE DRAWING	DRG. No.
PDMS MODEL REVIEW REPORT (60%)-GCS	BK-GCS-PEDCO-120-PI-0004
INSTRUMENT INDEX	BK-GCS-PEDCO-120-IN-0001

KEY PLAN

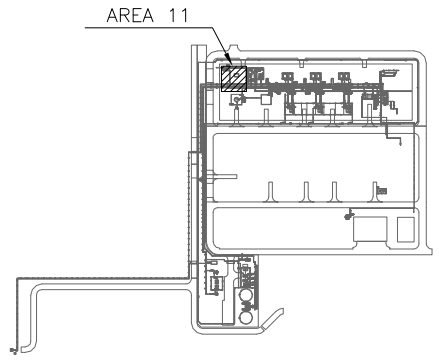

REV.	DATE	P.O.I.S	PREP.	CHK.	APP.	AUT.
D01	JUL.2023	IFA	P.Hajimadeghi	M.FAKHARIAN	A.M.MOHSENI	**.**
D00	AGU.2022	IFC	P.Hajimadeghi	M.FAKHARIAN	M.MEHRSHAD	**.**

REV.	DESCRIPTION	CHECKED BY	CHECKED DATE	REV. APPR. BY	REV. APPR. DATE
***	**********	**.**	***.****	**.**	***.****

PROJECT NAME: BINAK OILFIELD DEVELOPMENT/SURFACE FACILITIES GAS COMPRESSOR STATION

PROJECT NO.: 971020

EPC CONTRACTOR: HIRGAN ENERGY – DESIGN & INSPECTION COMPANIES

EPD/EPC CONTRACTOR (GC): PETROIRAN DEVELOPMENT COMPANY — PEDCO

اصل و کلیه نسخ این نقشه و حق اقتباس متعلق به شرکت ملی مناطق نفت خیز جنوب میباشد.

THE ORIGINAL AND ALL COPIES OF THIS DRAWING TOGETHER WITH THE COPYRIGHT THEREIN ARE THE SOLE PROPERTY OF N.I.S.O.C./ FIELDS

BINAK OILFIELD DEVELOPMENT
SURFACE FACILITIES
GAS COMPRESSOR STATION

DATE	SCALE	DRAWING BY	CHECKED BY	PROJECT ENG.

(VENDOR TITLE BLOCK)**

DRAWING TITLE: INSTRUMENT LOCATION LAYOUT

NO CONSTRUCTION PERMITTED UNLESS DRAWING APPROVED

APPROVED FOR CONSTRUCTION BY: DATE:

SCALE	SIZE	DRAWING NO.	SHEET NO.	REV.
N.T.S	A3	BK-GCS-PEDCO-120-IN-PY-0003	14 OF 21	D01

BUDGET REF.	LOCATION	SIZE	CLASS	SERIAL NO.	SHEET	REVISION
0-53-073-9184	F	2	J	708958	13 OF 20	D01

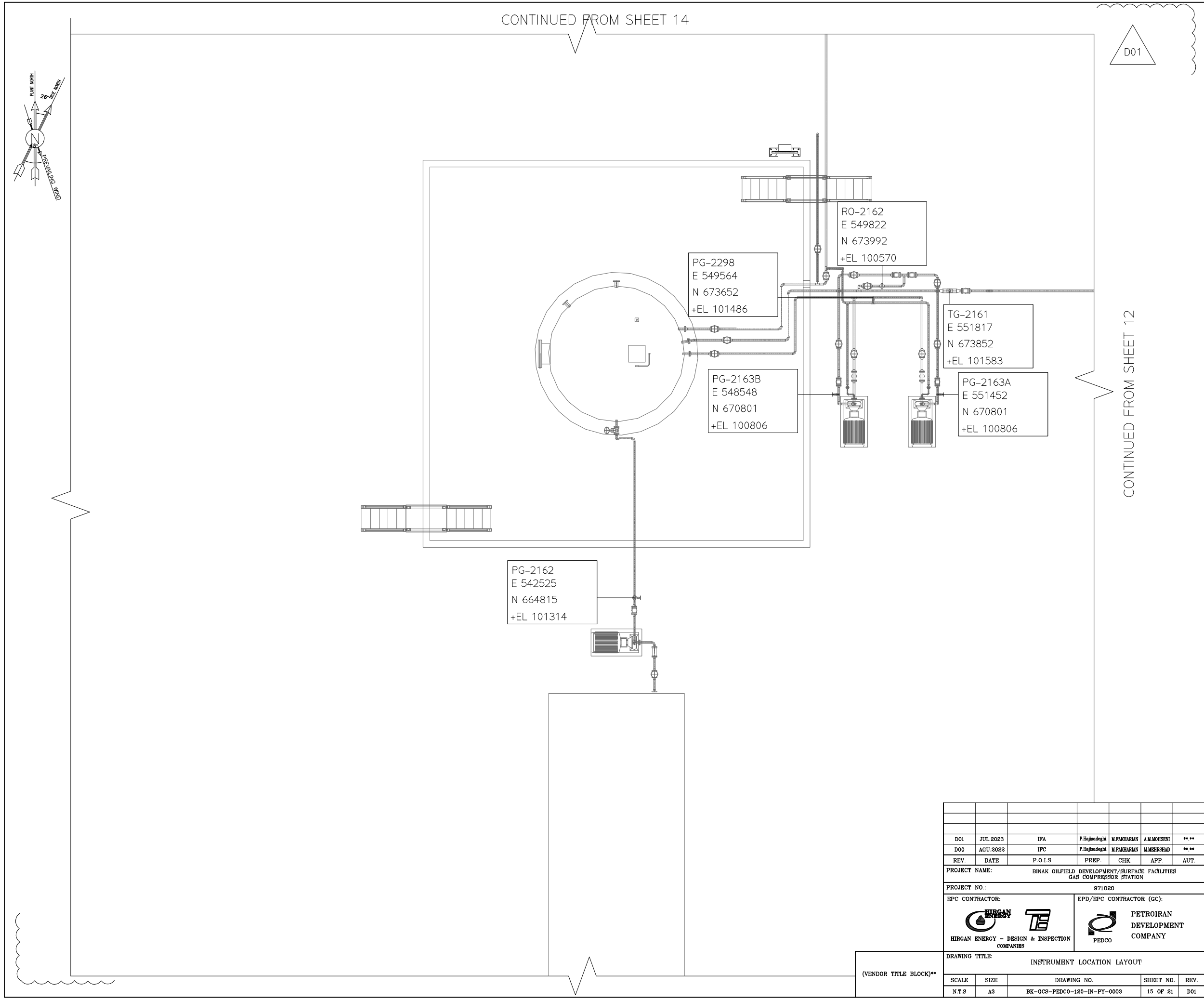

NOTES

LEGEND

REFERENCE DRAWING	DRG. No.
PDMS MODEL REVIEW REPORT (60%)-GCS	BK-GCS-PEDCO-120-PI-0004
INSTRUMENT INDEX	BK-GCS-PEDCO-120-IN-0001

KEY PLAN

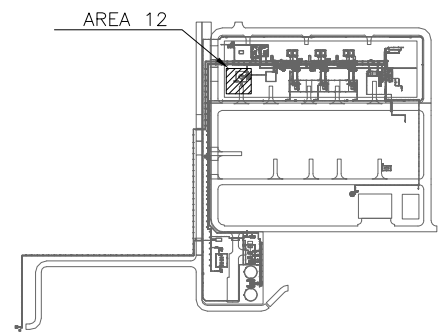

REV.	DATE	P.O.I.S	PREP.	CHK.	APP.	AUT.
D01	JUL.2023	IFA	P.Hajimdeghi	M.FAKHARIAN	A.M.MOHSENI	**.**
D00	AGU.2022	IFC	P.Hajimdeghi	M.FAKHARIAN	M.MEHRSHAD	**.**

REV.	DESCRIPTION	CHECKED BY	CHECKED DATE	REV. APPR. BY	REV. APPR. DATE
***	**********	**.**	***.****	**.**	***.****

PROJECT NAME: BINAK OILFIELD DEVELOPMENT/SURFACE FACILITIES GAS COMPRESSOR STATION

PROJECT NO.: 971020

EPC CONTRACTOR: HIRGAN ENERGY – DESIGN & INSPECTION COMPANIES

EPD/EPC CONTRACTOR (GC): PETROIRAN DEVELOPMENT COMPANY (PEDCO)

اصل و کلیه نسخ این نقشه و حق اقتباس متعلق به شرکت ملی مناطق نفت خیز جنوب میباشد.

THE ORIGINAL AND ALL COPIES OF THIS DRAWING TOGETHER WITH THE COPYRIGHT THEREIN ARE THE SOLE PROPERTY OF N.I.S.O.C./ FIELDS

BINAK OILFIELD DEVELOPMENT
SURFACE FACILITIES
GAS COMPRESSOR STATION

DATE	SCALE	DRAWING BY	CHECKED BY	PROJECT ENG.

(VENDOR TITLE BLOCK)**

DRAWING TITLE: INSTRUMENT LOCATION LAYOUT

NO CONSTRUCTION PERMITTED UNLESS DRAWING APPROVED

APPROVED FOR CONSTRUCTION BY: DATE:

SCALE	SIZE	DRAWING NO.	SHEET NO.	REV.	BUDGET REF.	LOCATION	SIZE	CLASS	SERIAL NO.	SHEET	REVISION
N.T.S	A3	BK-GCS-PEDCO-120-IN-PY-0003	15 OF 21	D01	0-53-073-9184	F	2	J	708958	14 OF 20	D01

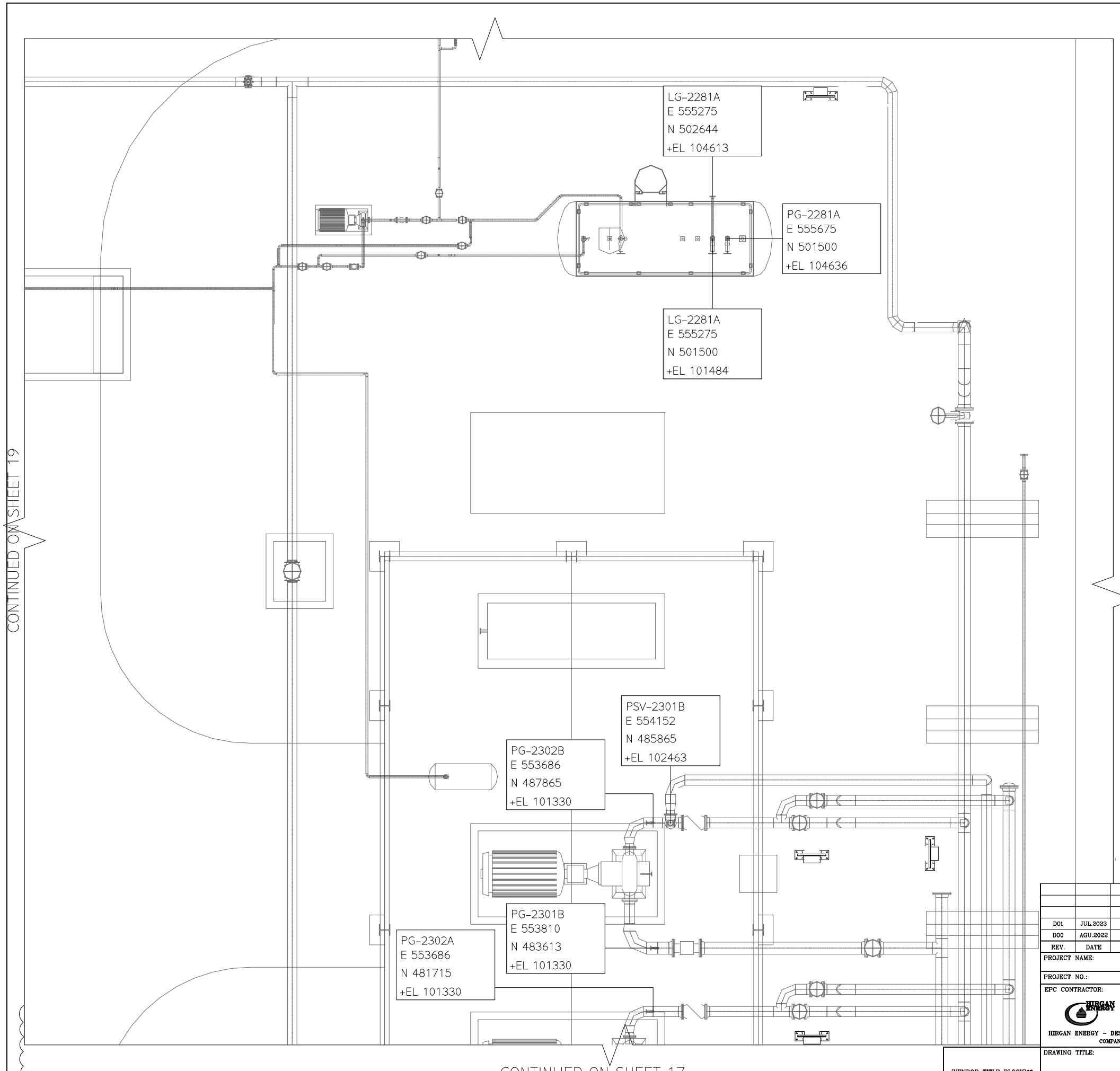

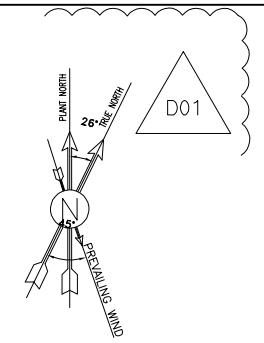

NOTES

LEGEND

REFERENCE DRAWING	DRG. No.
PDMS MODEL REVIEW REPORT (60%)-GCS	BK-GCS-PEDCO-120-PI-0004
INSTRUMENT INDEX	BK-GCS-PEDCO-120-IN-0001

KEY PLAN

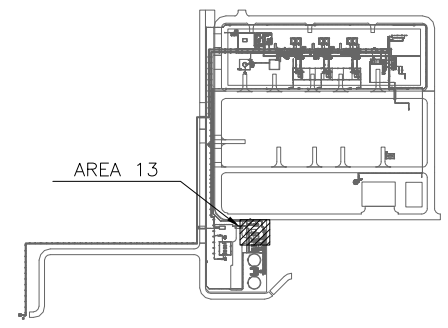

REV.	DATE	P.O.I.S	PREP.	CHK.	APP.	AUT.
D01	JUL.2023	IFA	P.Hajimadeghi	M.FAKHARIAN	A.M.MOESENI	**.**
D00	AGU.2022	IFC	P.Hajimadeghi	M.FAKHARIAN	M.MEHRSHAD	**.**

REV.	DESCRIPTION	BY	DATE	BY	DATE
		CHECKED		REV. APPR.	
***	**********	**.**	***.****	**.**	***.****

PROJECT NAME: BINAK OILFIELD DEVELOPMENT/SURFACE FACILITIES GAS COMPRESSOR STATION

PROJECT NO.: 971020

EPC CONTRACTOR: HIRGAN ENERGY – DESIGN & INSPECTION COMPANIES

EPD/EPC CONTRACTOR (GC): PETROIRAN DEVELOPMENT COMPANY — PEDCO

اصل و کلیه نسخ این نقشه و حق اقتباس متعلق به شرکت ملی مناطق نفت خیز جنوب میباشد.

THE ORIGINAL AND ALL COPIES OF THIS DRAWING TOGETHER WITH THE COPYRIGHT THEREIN ARE THE SOLE PROPERTY OF N.I.S.O.C./ FIELDS

BINAK OILFIELD DEVELOPMENT
SURFACE FACILITIES
GAS COMPRESSOR STATION

DATE	SCALE	DRAWING BY	CHECKED BY	PROJECT ENG.

DRAWING TITLE: INSTRUMENT LOCATION LAYOUT

(VENDOR TITLE BLOCK)**

NO CONSTRUCTION PERMITTED UNLESS DRAWING APPROVED

APPROVED FOR CONSTRUCTION BY: DATE:

SCALE	SIZE	DRAWING NO.	SHEET NO.	REV.	BUDGET REF.	LOCATION	SIZE	CLASS	SERIAL NO.	SHEET	REVISION
N.T.S	A3	BK-GCS-PEDCO-120-IN-PY-0003	16 OF 21	D01	0-53-073-9184	F	2	J	708958	15 OF 20	D01

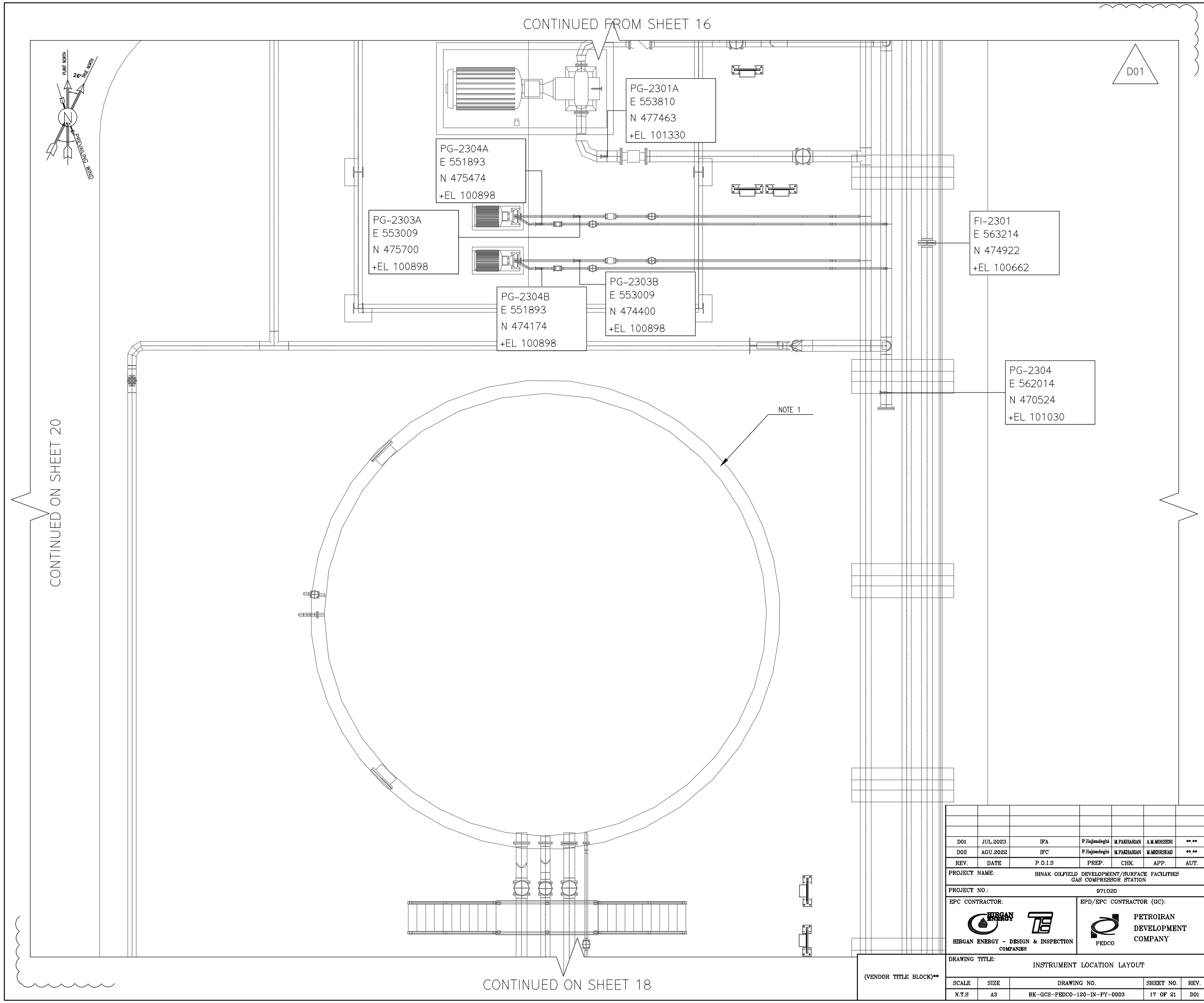

NOTES

1- INSTRUMENT OF FIREWATER SYSTEM WILL BE FINALIZED LATER.

LEGEND

REFERENCE DRAWING	DRG. No.
PDMS MODEL REVIEW REPORT (60%)-GCS	BK-GCS-PEDCO-120-PI-0004
INSTRUMENT INDEX	BK-GCS-PEDCO-120-IN-0001

KEY PLAN

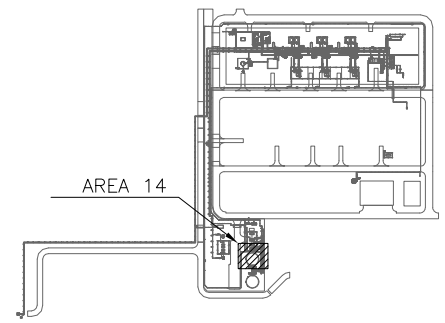

REV.	DATE	P.O.I.S	PREP.	CHK.	APP.	AUT.
D01	JUL.2023	IFA	P.Hajizadeghi	M.FAKHARIAN	A.M.MOHSENI	**.**
D00	AGU.2022	IFC	P.Hajizadeghi	M.FAKHARIAN	M.MEHRSHAD	**.**

REV.	DESCRIPTION	BY	DATE	BY	DATE
***	**********	**.**	***.****	**.**	***.****

PROJECT NAME: BINAK OILFIELD DEVELOPMENT/SURFACE FACILITIES GAS COMPRESSOR STATION

PROJECT NO.: 971020

EPC CONTRACTOR: HIRGAN ENERGY – DESIGN & INSPECTION COMPANIES

EPD/EPC CONTRACTOR (GC): PETROIRAN DEVELOPMENT COMPANY (PEDCO)

اصل و کلیه نسخ این نقشه و حق اقتباس متعلق به شرکت ملی مناطق نفت خیز جنوب میباشد.

THE ORIGINAL AND ALL COPIES OF THIS DRAWING TOGETHER WITH THE COPYRIGHT THEREIN ARE THE SOLE PROPERTY OF N.I.S.O.C./ FIELDS

BINAK OILFIELD DEVELOPMENT
SURFACE FACILITIES
GAS COMPRESSOR STATION

DATE	SCALE	DRAWING BY	CHECKED BY	PROJECT ENG.

NO CONSTRUCTION PERMITTED UNLESS DRAWING APPROVED

APPROVED FOR CONSTRUCTION BY: DATE:

DRAWING TITLE: INSTRUMENT LOCATION LAYOUT

(VENDOR TITLE BLOCK)**

SCALE	SIZE	DRAWING NO.	SHEET NO.	REV.	BUDGET REF.	LOCATION	SIZE	CLASS	SERIAL NO.	SHEET	REVISION
N.T.S	A3	BK-GCS-PEDCO-120-IN-PY-0003	17 OF 21	D01	0-53-073-9184	F	2	J	708958	16 OF 20	D01

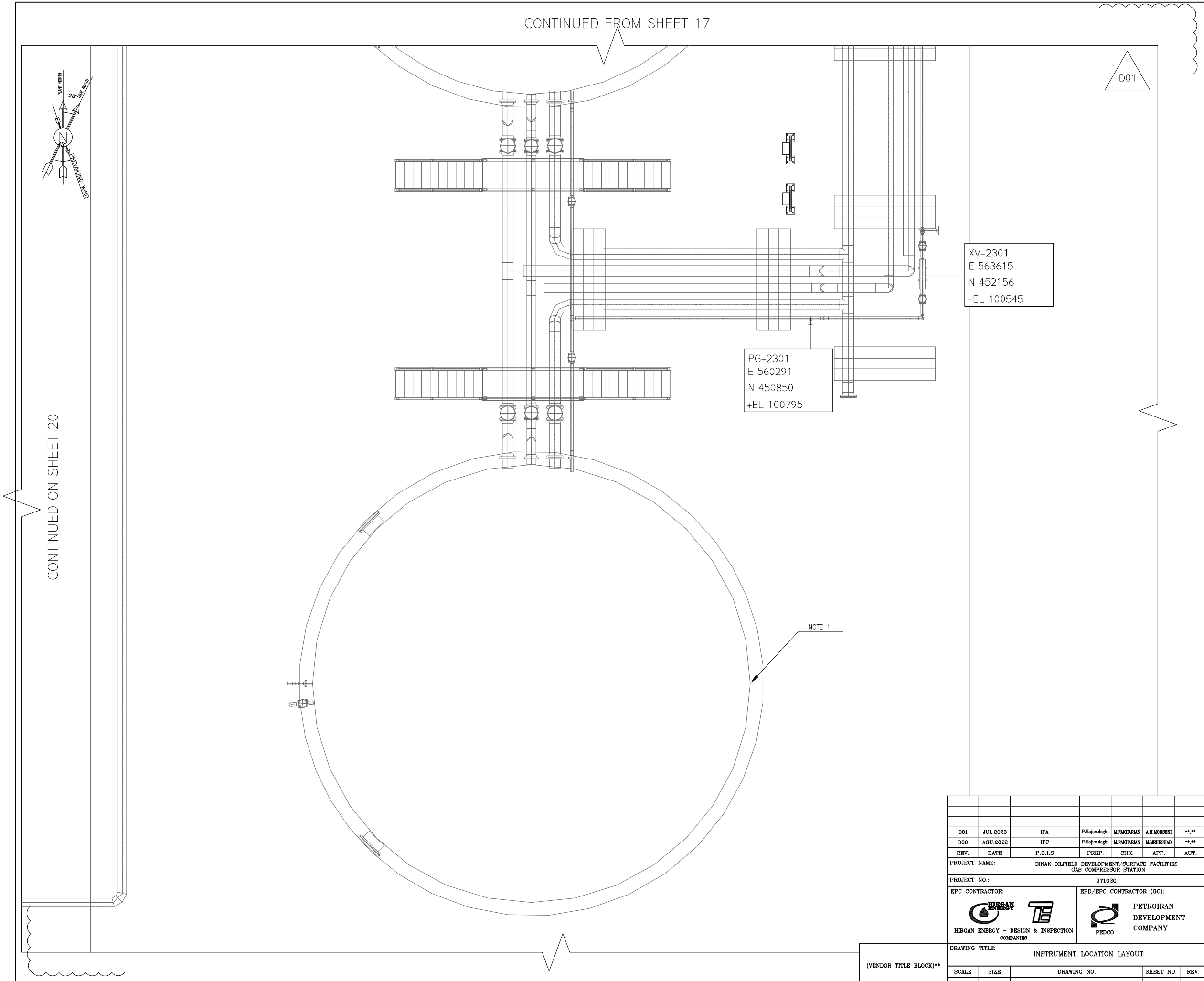

NOTES

1- INSTRUMENT OF FIREWATER SYSTEM WILL BE FINALIZED LATER.

LEGEND

REFERENCE DRAWING	DRG. No.
PDMS MODEL REVIEW REPORT (60%)-GCS	BK-GCS-PEDCO-120-PI-0004
INSTRUMENT INDEX	BK-GCS-PEDCO-120-IN-0001

KEY PLAN

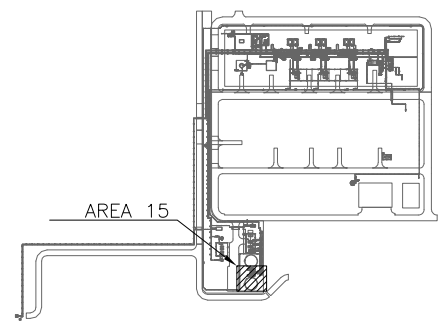

REV.	DATE	P.O.I.S	PREP.	CHK.	APP.	AUT.
D01	JUL.2023	IFA	P.Hajimdeghi	M.FAKHARIAN	A.M.MOHSENI	**.**
D00	AGU.2022	IFC	P.Hajimdeghi	M.FAKHARIAN	M.MEHRSHAD	**.**

REV.	DESCRIPTION	BY	DATE	BY	DATE
		CHECKED		REV. APPR.	
***	**********	**.**	***.****	**.**	***.****

PROJECT NAME: BINAK OILFIELD DEVELOPMENT/SURFACE FACILITIES GAS COMPRESSOR STATION

PROJECT NO.: 971020

EPC CONTRACTOR: HIRGAN ENERGY – DESIGN & INSPECTION COMPANIES

EPD/EPC CONTRACTOR (GC): PETROIRAN DEVELOPMENT COMPANY — PEDCO

اصل و کلیه نسخ این نقشه و حق اقتباس متعلق به شرکت ملی مناطق نفت خیز جنوب میباشد.

THE ORIGINAL AND ALL COPIES OF THIS DRAWING TOGETHER WITH THE COPYRIGHT THEREIN ARE THE SOLE PROPERTY OF N.I.S.O.C./ FIELDS

BINAK OILFIELD DEVELOPMENT
SURFACE FACILITIES
GAS COMPRESSOR STATION

DATE	SCALE	DRAWING BY	CHECKED BY	PROJECT ENG.

NO CONSTRUCTION PERMITTED UNLESS DRAWING APPROVED

APPROVED FOR CONSTRUCTION BY: DATE:

(VENDOR TITLE BLOCK)**

DRAWING TITLE: INSTRUMENT LOCATION LAYOUT

SCALE	SIZE	DRAWING NO.	SHEET NO.	REV.	BUDGET REF.	LOCATION	SIZE	CLASS	SERIAL NO.	SHEET	REVISION
N.T.S	A3	BK-GCS-PEDCO-120-IN-PY-0003	18 OF 21	D01	0-53-073-9184	F	2	J	708958	17 OF 20	D01

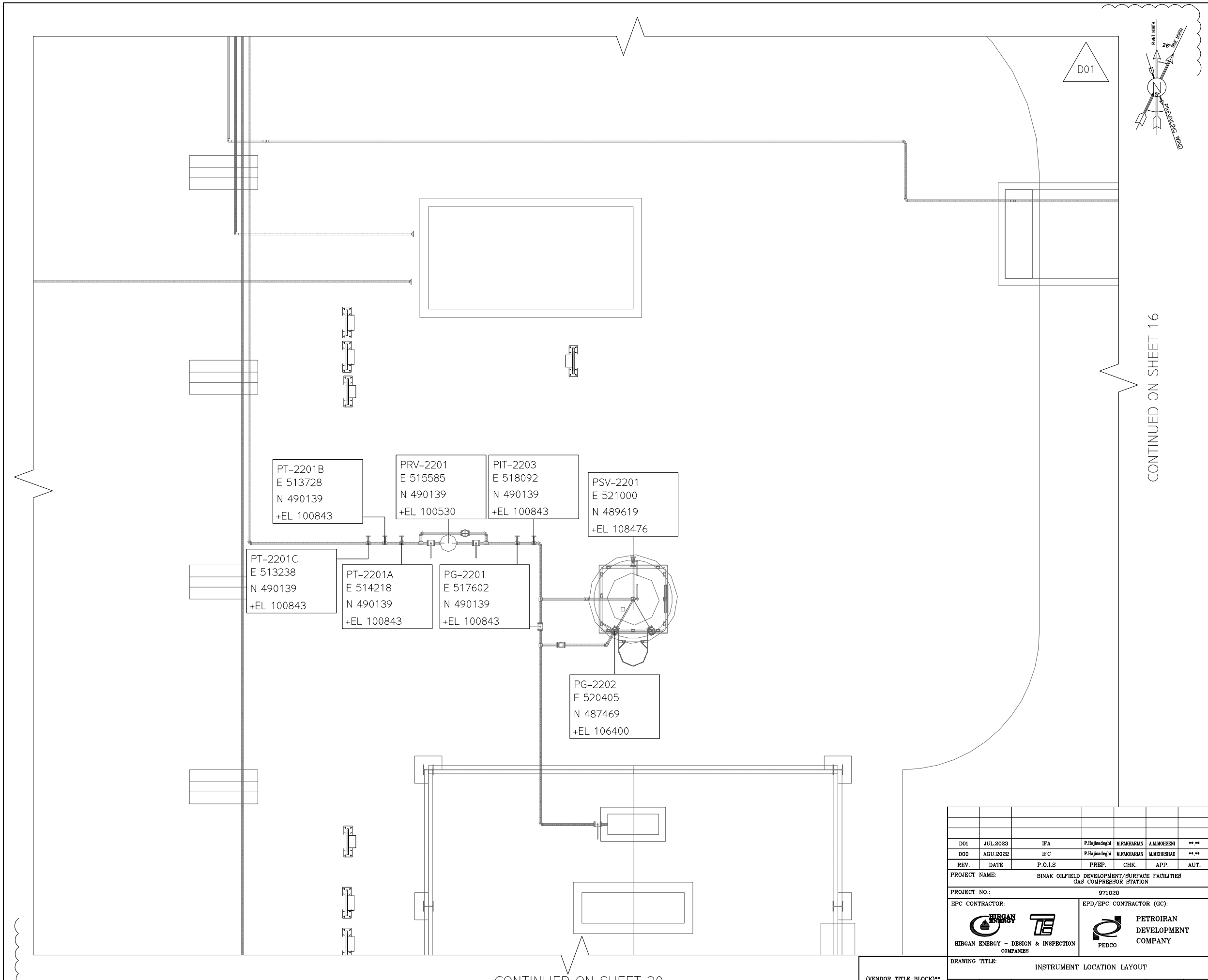

NOTES

LEGEND

REFERENCE DRAWING	DRG. No.
PDMS MODEL REVIEW REPORT (60%)-GCS	BK-GCS-PEDCO-120-PI-0004
INSTRUMENT INDEX	BK-GCS-PEDCO-120-IN-0001

KEY PLAN

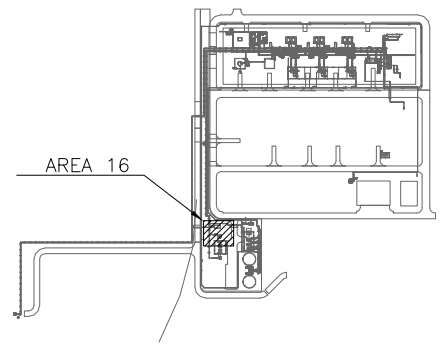

REV.	DATE	P.O.I.S	PREP.	CHK.	APP.	AUT.
D01	JUL.2023	IFA	P.Hajimadeghi	M.FAKHARIAN	A.M.MOHSENI	**.**
D00	AGU.2022	IFC	P.Hajimadeghi	M.FAKHARIAN	M.MEHRSHAD	**.**

REV.	DESCRIPTION	BY	DATE	BY	DATE
		CHECKED		REV. APPR.	
***	**********	**.**	***.****	**.**	***.****

PROJECT NAME: BINAK OILFIELD DEVELOPMENT/SURFACE FACILITIES GAS COMPRESSOR STATION

PROJECT NO.: 971020

EPC CONTRACTOR: HIRGAN ENERGY – DESIGN & INSPECTION COMPANIES

EPD/EPC CONTRACTOR (GC): PEDCO — PETROIRAN DEVELOPMENT COMPANY

اصل و کلیه نسخ این نقشه و حق اقتباس متعلق به شرکت ملی مناطق نفت خیز جنوب میباشد.

THE ORIGINAL AND ALL COPIES OF THIS DRAWING TOGETHER WITH THE COPYRIGHT THEREIN ARE THE SOLE PROPERTY OF N.I.S.O.C./ FIELDS

BINAK OILFIELD DEVELOPMENT
SURFACE FACILITIES
GAS COMPRESSOR STATION

DATE	SCALE	DRAWING BY	CHECKED BY	PROJECT ENG.

NO CONSTRUCTION PERMITTED UNLESS DRAWING APPROVED

APPROVED FOR CONSTRUCTION BY: DATE:

(VENDOR TITLE BLOCK)**

DRAWING TITLE: INSTRUMENT LOCATION LAYOUT

SCALE	SIZE	DRAWING NO.	SHEET NO.	REV.	BUDGET REF.	LOCATION	SIZE	CLASS	SERIAL NO.	SHEET	REVISION
N.T.S	A3	BK-GCS-PEDCO-120-IN-PY-0003	19 OF 21	D01	0-53-073-9184	F	2	J	708958	18 OF 20	D01

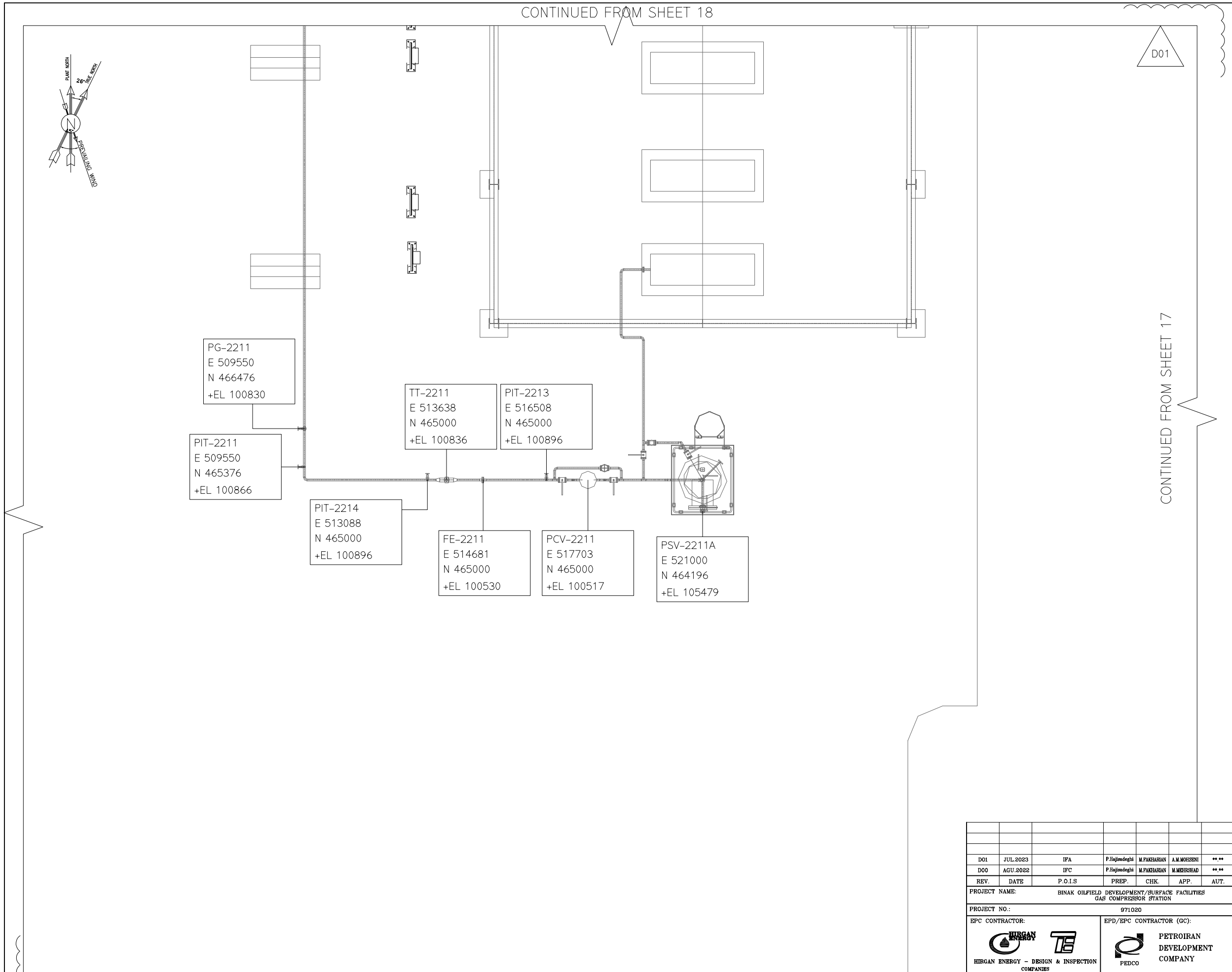

NOTES

LEGEND

REFERENCE DRAWING	DRG. No.
PDMS MODEL REVIEW REPORT (60%)-GCS	BK-GCS-PEDCO-120-PI-0004
INSTRUMENT INDEX	BK-GCS-PEDCO-120-IN-0001

KEY PLAN

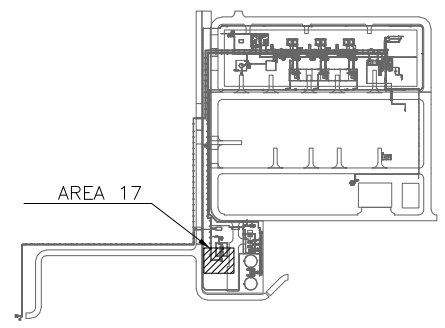

REV.	DATE	P.O.I.S	PREP.	CHK.	APP.	AUT.
D01	JUL.2023	IFA	P.Hajimdeghi	M.FAKHARIAN	A.M.MOHSENI	**.**
D00	AGU.2022	IFC	P.Hajimdeghi	M.FAKHARIAN	M.MEHRSHAD	**.**

REV.	DESCRIPTION	BY	DATE	BY	DATE
		CHECKED		REV. APPR.	
***	**********	**.**	***.****	**.**	***.****

PROJECT NAME: BINAK OILFIELD DEVELOPMENT/SURFACE FACILITIES GAS COMPRESSOR STATION

PROJECT NO.: 971020

EPC CONTRACTOR: HIRGAN ENERGY – DESIGN & INSPECTION COMPANIES

EPD/EPC CONTRACTOR (GC): PETROIRAN DEVELOPMENT COMPANY (PEDCO)

اصل و کلیه نسخ این نقشه و حق اقتباس متعلق به شرکت ملی مناطق نفت خیز جنوب میباشد.

THE ORIGINAL AND ALL COPIES OF THIS DRAWING TOGETHER WITH THE COPYRIGHT THEREIN ARE THE SOLE PROPERTY OF N.I.S.O.C./ FIELDS

BINAK OILFIELD DEVELOPMENT
SURFACE FACILITIES
GAS COMPRESSOR STATION

DATE	SCALE	DRAWING BY	CHECKED BY	PROJECT ENG.

NO CONSTRUCTION PERMITTED UNLESS DRAWING APPROVED

APPROVED FOR CONSTRUCTION BY: DATE:

(VENDOR TITLE BLOCK)**

DRAWING TITLE: INSTRUMENT LOCATION LAYOUT

SCALE	SIZE	DRAWING NO.	SHEET NO.	REV.
N.T.S	A3	BK-GCS-PEDCO-120-IN-PY-0003	20 OF 21	D01

BUDGET REF.	LOCATION	SIZE	CLASS	SERIAL NO.	SHEET	REVISION
0-53-073-9184	F	2	J	708958	19 OF 20	D01

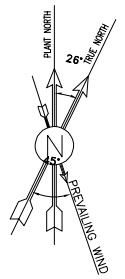

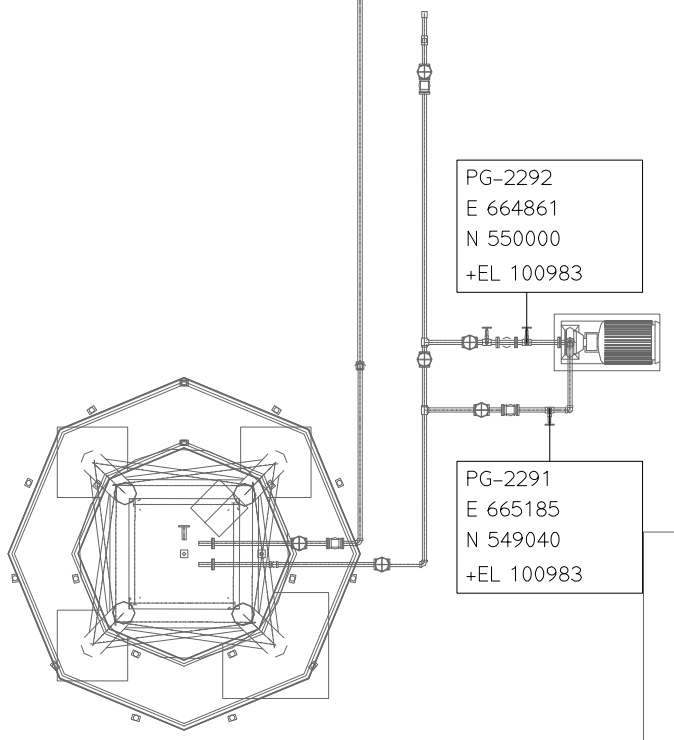

D01

NOTES

LEGEND

REFERENCE DRAWING	DRG. No.
PDMS MODEL REVIEW REPORT (60%)-GCS	BK-GCS-PEDCO-120-PI-0004
INSTRUMENT INDEX	BK-GCS-PEDCO-120-IN-0001

KEY PLAN

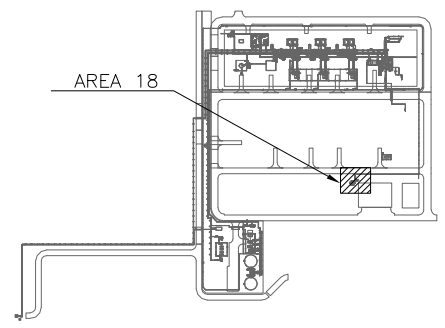

REV.	DATE	P.O.I.S	PREP.	CHK.	APP.	AUT.
D01	JUL.2023	IFA	P.Hajimdeghi	M.FAKHARIAN	A.M.MOHSENI	**.**
D00	AGU.2022	IFC	P.Hajimdeghi	M.FAKHARIAN	M.MEHRSHAD	**.**

REV.	DESCRIPTION	BY	DATE	BY	DATE
***	**********	**.**	***.****	**.**	***.****
		CHECKED		REV. APPR.	

PROJECT NAME: BINAK OILFIELD DEVELOPMENT/SURFACE FACILITIES GAS COMPRESSOR STATION

PROJECT NO.: 971020

اصل و کلیه نسخ این نقشه و حق اقتباس متعلق به شرکت ملی مناطق نفت خیز جنوب میباشد.

THE ORIGINAL AND ALL COPIES OF THIS DRAWING TOGETHER WITH THE COPYRIGHT THEREIN ARE THE SOLE PROPERTY OF N.I.S.O.C./ FIELDS

EPC CONTRACTOR: HIRGAN ENERGY – DESIGN & INSPECTION COMPANIES

EPD/EPC CONTRACTOR (GC): PETROIRAN DEVELOPMENT COMPANY (PEDCO)

BINAK OILFIELD DEVELOPMENT
SURFACE FACILITIES
GAS COMPRESSOR STATION

DATE	SCALE	DRAWING BY	CHECKED BY	PROJECT ENG.

(VENDOR TITLE BLOCK)**

DRAWING TITLE: INSTRUMENT LOCATION LAYOUT

NO CONSTRUCTION PERMITTED UNLESS DRAWING APPROVED

APPROVED FOR CONSTRUCTION BY: DATE:

SCALE	SIZE	DRAWING NO.	SHEET NO.	REV.
N.T.S	A3	BK-GCS-PEDCO-120-IN-PY-0003	21 OF 21	D01

BUDGET REF.	LOCATION	SIZE	CLASS	SERIAL NO.	SHEET	REVISION
0-53-073-9184	F	2	J	708958	20 OF 20	D01