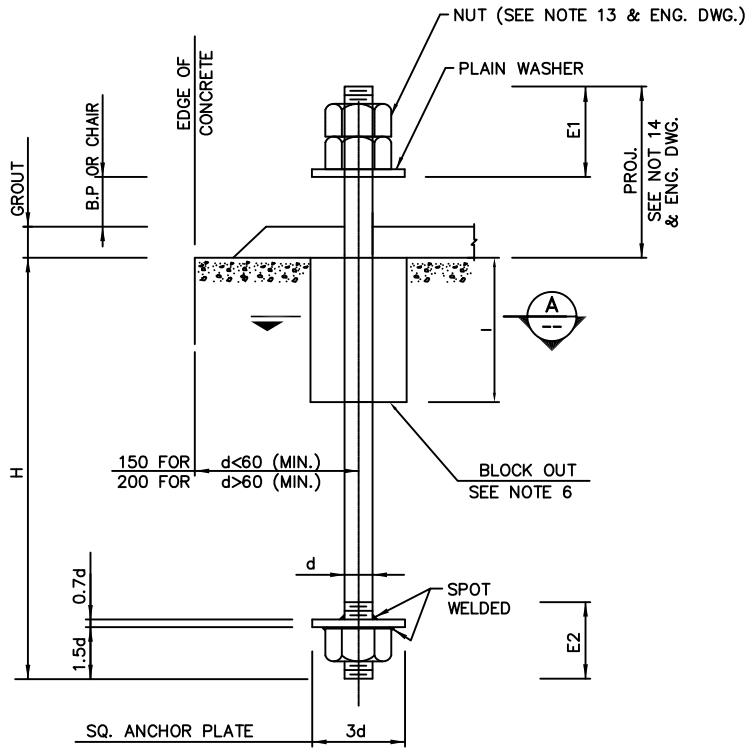

TYPE "S"

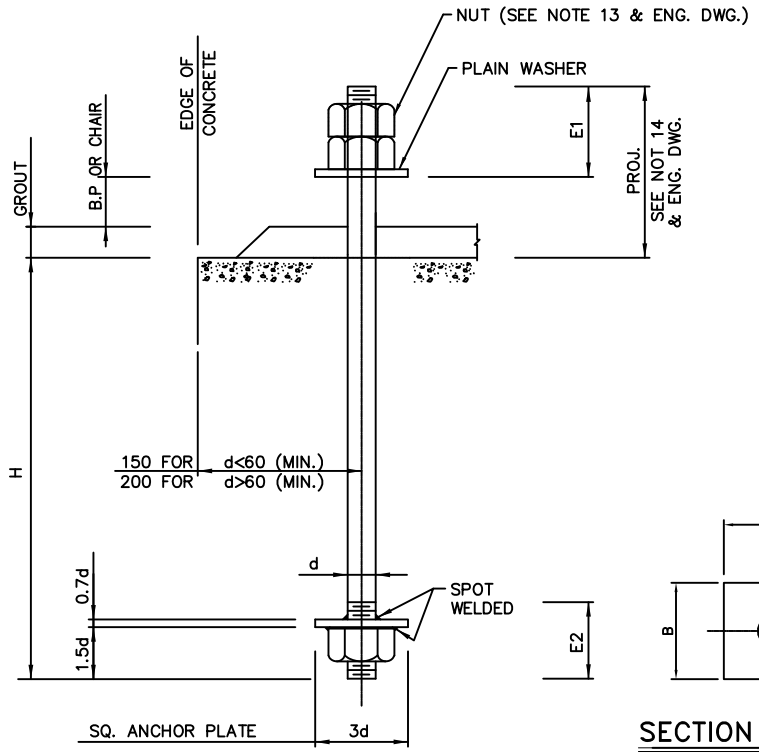

TYPE "T"

1. ANCHOR BOLT DESIGNATION

ON ENGINEERING DWG. ANCHOR BOLT TO BE DESIGNATED AS FOLLOWS.

NO. OF ANCHOR BOLTS		TYPE OF BOLT (S OR T)		NOMINAL SIZE	OVERAL EMBEDED LENGTH "H" FOR TYPE (S) "H" FOR TYPE (T)
(1)	(2)	(3)	(4)	(5)	(6)
		BOLT CLASS F0/F1/F2			PROJECTION

EXAMPLE : 16-T- F0 -20-150-725
(1) (2) (3) (4) (5) (6)

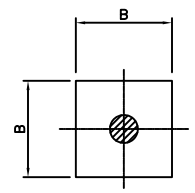

SECTION A
(BLOCK OUT SEE NOTE 6)

NOTES

1. ALL DIMENSIONS ARE IN MILLIMETERS UNLESS OTHERWISE NOTED.
2. ALL NUTS & WASHERS SHALL BE HOT DIP GALVANIZED.
3. FIT OF NUTS ON THREADS OF ANCHOR BOLTS SHALL BE VERIFIED BEFORE SHIPMENT.
4. TYPE "T" BOLT ASSEMBLY SHALL CONSIST OF ANCHOR BOLT WITH TACK WELDED NUT AT BOTTOM, NUT(S) AT TOP AND PLAIN WASHER AS SPECIFIED UNLESS OTHERWISE NOTED.
5. ANCHOR BOLTS SHALL BE FULL LENGHT HOT DIP GALVANIZED
6. BLOCK OUT TO BE USED IN EQUIPMENT FOUNDATIONS ONLY PROVIDED THAT NO TEMPLATE EXIST.
7. ANCHOR BOLTS SHALL BE TIGHTENED TO SNUG CONDITION EXCEPT WHERE TORQUE VALUE IS SPECIFIED ON THE DESIGN DRAWINGS OR AT THE LOCATIONS OF SLIDE PLATES.
8. INSTALLATION TOLERANCE : 1/10 OF DIAMETER FOR BOLT $\leq$ DIA 30
   1/20 DIAMETER FOR BOLTS > DIA 30.
9. FOR EXCHANGER AND PUMPS ANCHOR HOLE SIZE=DIA.+3mm.
10. FOR TOWERS:FOR 24 TO 72 ANCHOR BOLTS, ANCHOR HOLE SIZE=DIA+6mm.
11. FOR HORIZONTAL DRUMS ANCHOR HOLE SIZE=DIA.+3mm.
12. FOR VERTICAL DRUMS ON LEGS ANCHOR HOLE SIZE=DIA.+3mm.
13. ALL ANCHOR BOLTS SHALL HAVE TWO NUTS.
14. IN CASE OF NO VALUE SPECIFIED IN THE TABLES,THE FOLLOWING FORMULA: PROJ.=GROUT THK.+B.P.OR CHAIR THK.+E1 (ACC. TO ENG. DWG.)
15. TOTAL LENGTH = PROJECTION+H (FOR TYPE (S)&(T))

STANDARD "S" ANCHOR BOLT DATA TABLE

BOLT DIA (d)	THREADED LENGTH (E1)	THREADED LENGTH (E2)	EMBEDDED LENGTH(H)		BLOCK OUT		FOR EQUIPMENT FOUNDATION		FOR OTHER FOUNDATION			WEIGHT(Kg)	
	2 NUT		F0	F1/F2	l	B	PROJECTION	TOTAL LENGTH	PROJECTION	TOTAL LENGTH F0	TOTAL LENGTH F1/F2	F0	F1/F2
16	65	60	420	500	100	100	SEE ENG. DWG.	SEE NOTE 16	115	535	615	0.85	1.00
18	70	60	460	550	100	100			120	580	670	1.15	1.40
20	80	60	500	600	100	100			130	630	730	1.55	1.80
24	85	60	580	700	100	100			135	715	835	2.70	3.00
27	100	70	640	775	100	100			140	780	915	3.50	4.20
30	110	75	700	850	100	100			150	850	1000	4.70	5.60
33	120	80	760	925	100	100			160	920	1085	6.20	7.30
36	130	90	870	1050	150	150			170	1040	1220	8.40	9.80
42	150	105	990	1200	150	150			200	1190	1400	13.00	15.20
48	170	120	1110	1275	150	150			220	1330	1495	18.90	21.20
56	200	140	1320	1600	200	150			250	1570	1850	30.40	35.75
64	225	160	1580	1900	300	150			275	1855	2175	52.70	61.90
72	255	180	1740	2100	300	150			305	2045	2405	65.50	76.70

STANDARD "T" ANCHOR BOLT DATA TABLE

BOLT DIA (d)	THREADED LENGTH (E1)	THREADED LENGTH (E2)	EMBEDDED LENGTH(H)		FOR EQUIPMENT FOUNDATION		FOR OTHER FOUNDATION			WEIGHT (Kg)	
	2 NUT		F0	F1/F2	PROJECTION	TOTAL LENGTH	PROJECTION	TOTAL LENGTH F0	TOTAL LENGTH F1/F2	F0	F1/F2
16	65	60	320	400	SEE ENG. DWG.	SEE NOTE 16	115	435	515	0.70	0.85
18	70	60	360	450			120	480	570	0.95	1.15
20	80	60	400	500			130	530	630	1.30	1.55
24	85	60	480	600			135	615	735	2.20	3.00
27	100	70	540	675			140	680	815	3.05	3.70
30	110	75	600	750			150	750	900	4.15	5.00
33	120	80	660	825			160	820	985	5.20	6.60
36	130	90	720	900			170	890	1070	7.10	8.55
42	150	105	840	1050			200	1040	1250	11.30	13.60
48	170	120	960	1125			220	1180	1345	17.10	19.20
56	200	140	1120	1400			250	1370	1650	26.70	30.90
64	225	160	1280	1600			275	1555	1875	46.00	54.15
72	255	180	1440	1800			305	1745	2105	56.00	67.00

MATERIAL

PART OF BOLT		BOLT CLASS F0	BOLT CLASS F1	BOLT CLASS F2
SHANK	STEEL	ISIRI/ISO 4.6	ISIRI/ISO 8.8	ASTM A193 Gr.B7
	THREAD	ISO "COARSE PITCH"	ISO "COARSE PITCH"	ISO "COARSE PITCH"
	THREAD TOLERANCE	6g	6g	6g
NUTS	STEEL	ISIRI/ISO 5	ISIRI/ISO 8	ASTM A194 Gr.2H
	THREAD	ISO "COARSE PITCH"	ISO "COARSE PITCH"	ISO "COARSE PITCH"
	THREAD TOLERANCE	6AZ	6AZ	6AZ
WASHERS	STEEL	200HV	200HV	F436M TYPE 1
ANCHOR PLATE	STEEL	S235JR	S235JR	S235JR
PIPE FOR SLEEVE	STEEL/HIGH DENSITY POLYETHYLENE	S235JR/HDPE	S235JR/HDPE	S235JR/HDPE

LEGEND

REFERENCE DRAWING	DRG. No.
GENERAL NOTES - STEEL STRUCTURES	BK-GNRAL-PEDCO-000-ST-SP-0011
GENERAL NOTES - REINFORCEMENT CONCRETE STRUCTURES	BK-GNRAL-PEDCO-000-ST-SP-0012

KEY PLAN

REV.	DATE	P.O.I.S	PREP.	CHK.	APP.	AUT.
D02	FEB.2022	AFC	R.BEHLOUIE	M.PAKHARIAN	M.MEHRSHAD	⁰⁰.⁰⁰
D01	JAN.2022	IFA	R.BEHLOUIE	M.PAKHARIAN	M.MEHRSHAD	⁰⁰.⁰⁰
D00	DEC.2021	IFC	R.BEHLOUIE	M.PAKHARIAN	M.MEHRSHAD	⁰⁰.⁰⁰

REV.	DESCRIPTION	BY	DATE	BY	DATE
		CHECKED		REV. APPR.	
⁰⁰⁰	⁰⁰⁰⁰⁰⁰⁰⁰⁰⁰	⁰⁰.⁰⁰	⁰⁰⁰.⁰⁰⁰⁰	⁰⁰.⁰⁰	⁰⁰⁰.⁰⁰⁰⁰

PROJECT NAME: BINAK OILFIELD DEVELOPMENT GENERAL

PROJECT NO.: 971020

EPC CONTRACTOR: HIRGAN ENERGY – DESIGN & INSPECTION COMPANIES

EPD/EPC CONTRACTOR (GC): PETROIRAN DEVELOPMENT COMPANY — PEDCO

DRAWING TITLE: STANDARD DRAWING FOR ANCHOR BOLTS

SCALE	SIZE	DRAWING NO.	SHEET NO.	REV.
N.T.S.	A1	BK-GNRAL-PEDCO-000-ST-DW-0002	1 OF 1	D01

اصل و کلیه نسخ این نقشه و حق اقتباس متعلق به شرکت ملی مناطق نفت خیز جنوب میباشد.

THE ORIGINAL AND ALL COPIES OF THIS DRAWING TOGETHER WITH THE COPYRIGHT THEREIN ARE THE SOLE PROPERTY OF N.I.S.O.C./ FIELDS

BINAK OILFIELD DEVELOPMENT GENERAL

DATE	SCALE	DRAWING BY	CHECKED BY	PROJECT ENG.

NO CONSTRUCTION PERMITTED UNLESS DRAWING APPROVED

APPROVED FOR CONSTRUCTION | BY: | DATE:

BUDGET REF.	LOCATION	SIZE	CLASS	SERIAL NO.	SHEET	REVISION
053-073-9184	F	4	Q	707276	1 OF 1	D02