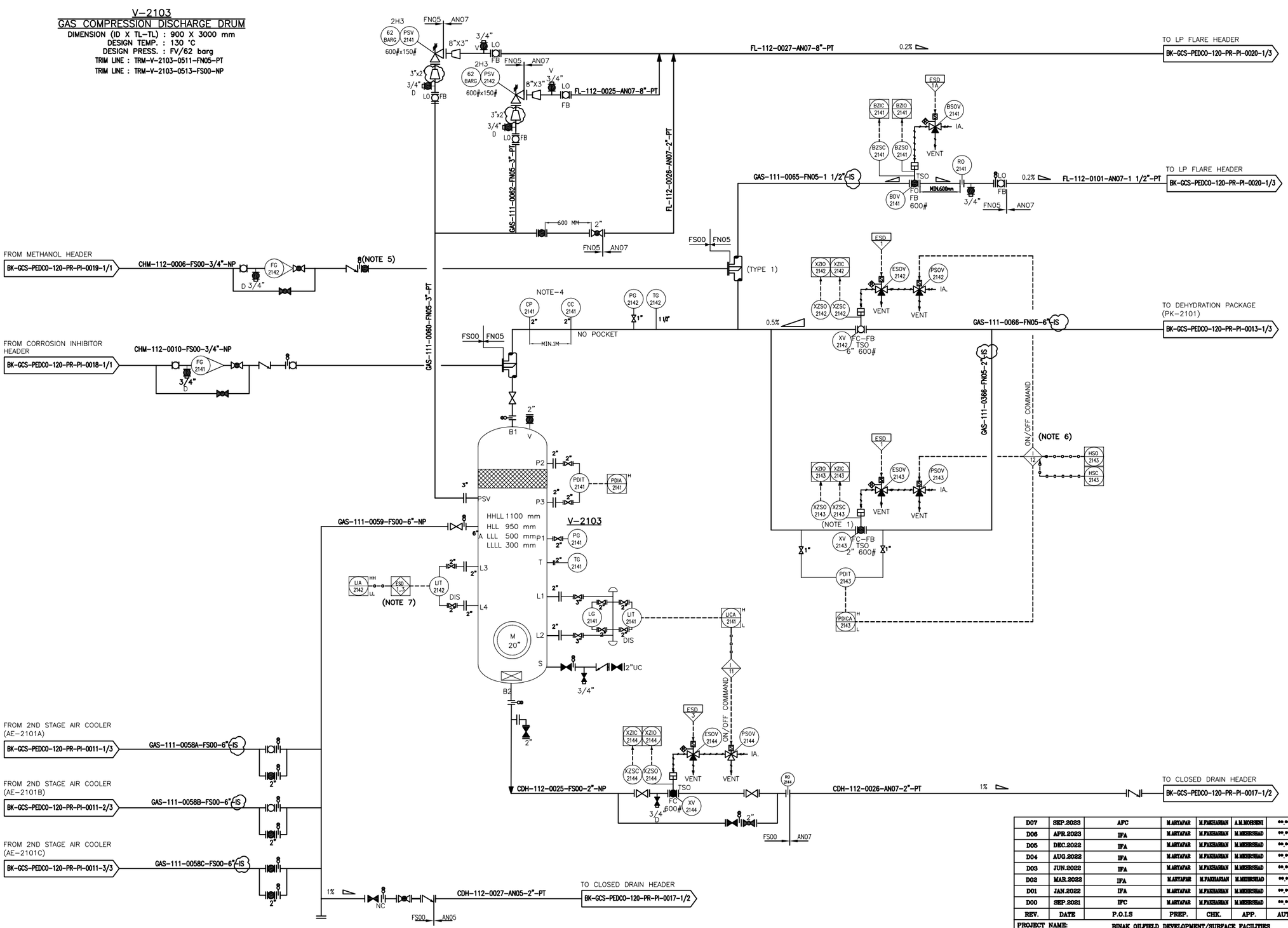


## NOTES

1- DELETED.

2- DELETED.

3- DELETED.

4- ONE PORTABLE METER FOR CORROSION PROBES TO BE PROVIDE PER SITE TO RECOVERY MONITOR CORROSION DATA.

5- BEFORE IN CASE OF COLD DEPRESSURIZING, MANUAL VALVE WILL BE OPEN BY OPERATOR.

6- OPEN/CLOSE COMMAND BY OPERATOR WILL BE IMPLEMENTED BY EQUALIZING LOGIC DURING START UP.

7- ESD LEVEL 1 FOR HH AND 3 FOR LL LIQUID LEVEL

8- PARTIAL STROKE DEVICE TO BE CONSIDERED FOR ALL ESDV'S ACTIVATED BY ESD 1,0.

## LEGEND

V: BY COOLER VENDOR

TYPE 1

REMOVABLE ELBOW

4" SPRAY NOZZLE

FLOW

INJECTION DEVICE PERMANENTLY CONNECTED (GAS SERVICE)

| REFERENCE DRAWING | DRG. No. |
|---|---|
| Process Flow Diagram | BK-GCS-PEDCO-120-PR-PF-0001 |
| Symbol & Legend For PFD and P&ID | BK-GCS-PEDCO-120-PR-PI-0001 |

## KEY PLAN

TYPE 1

REMOVABLE ELBOW

4" SPRAY NOZZLE

INJECTION DEVICE PERMANENTLY CONNECTED (GAS SERVICE)

| REV. | DATE | P.O.I.S | PREP. | CHK. | APP. | AUT. |
|---|---|---|---|---|---|---|
| D07 | SEP.2023 | AFC | M.ARYAFAR | M.FAKHARIAN | A.M.MOHSENI | ••.•• |
| D06 | APR.2023 | IFA | M.ARYAFAR | M.FAKHARIAN | M.MEHRSHAD | ••.•• |
| D05 | DEC.2022 | IFA | M.ARYAFAR | M.FAKHARIAN | M.MEHRSHAD | ••.•• |
| D04 | AUG.2022 | IFA | M.ARYAFAR | M.FAKHARIAN | M.MEHRSHAD | ••.•• |
| D03 | JUN.2022 | IFA | M.ARYAFAR | M.FAKHARIAN | M.MEHRSHAD | ••.•• |
| D02 | MAR.2022 | IFA | M.ARYAFAR | M.FAKHARIAN | M.MEHRSHAD | ••.•• |
| D01 | JAN.2022 | IFA | M.ARYAFAR | M.FAKHARIAN | M.MEHRSHAD | ••.•• |
| D00 | SEP.2021 | IFC | M.ARYAFAR | M.FAKHARIAN | M.MEHRSHAD | ••.•• |

| REV. | DESCRIPTION | CHECKED BY | CHECKED DATE | REV. APPR. BY | REV. APPR. DATE |
|---|---|---|---|---|---|
| ••• | •••••••••• | ••.•• | •••.•••• | ••.•• | •••.•••• |

PROJECT NAME: BINAK OILFIELD DEVELOPMENT/SURFACE FACILITIES GAS COMPRESSOR STATION

PROJECT NO.: 971020

EPC CONTRACTOR: HIRGAN ENERGY – DESIGN & INSPECTION COMPANIES

EPD/EPC CONTRACTOR (GC): PETROIRAN DEVELOPMENT COMPANY (PEDCO)


اصل و کلیه نسخ این نقشه و حق اقتباس متعلق به شرکت ملی مناطق نفت خیز جنوب میباشد

THE ORIGINAL AND ALL COPIES OF THIS DRAWING TOGETHER WITH THE COPYRIGHT THEREIN ARE THE SOLE PROPERTY OF N.I.S.O.C./ FIELDS


BINAK OILFIELD DEVELOPMENT SURFACE FACILITIES GAS COMPRESSOR STATION

| DATE | SCALE | DRAWING BY | CHECKED BY | PROJECT ENG. |
|---|---|---|---|---|
| | | | | |

NO CONSTRUCTION PERMITTED UNLESS DRAWING APPROVED

APPROVED FOR CONSTRUCTION | BY: | DATE:

(VENDOR TITLE BLOCK)**

DRAWING TITLE: P&ID – 2nd STAGE GAS COMPRESSION DISCHARGE DRUM

| SCALE | SIZE | DRAWING NO. | SHEET NO. | REV. | BUDGET REF. | LOCATION | SIZE | CLASS | SERIAL NO. | SHEET | REVISION |
|---|---|---|---|---|---|---|---|---|---|---|---|
| NS | A3 | BK-GCS-PEDCO-120-PR-PI-0012 | 1 OF 1 | D07 | 053-073-9184 | F | 2 | A | 708790 | 1 OF 1 | D07 |