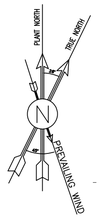

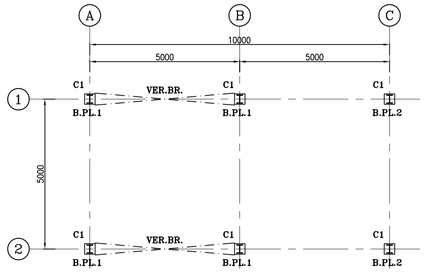

1:100 (1) COLUMN & BASE PLATE LAYOUT PLAN

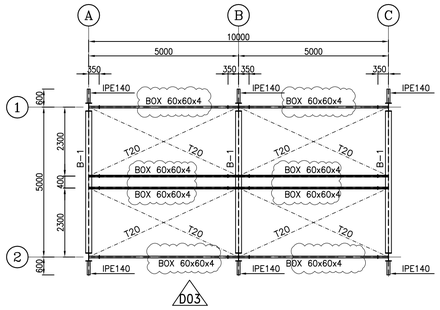

1:100 (2) ROOF HORIZONTAL BRACING PLAN

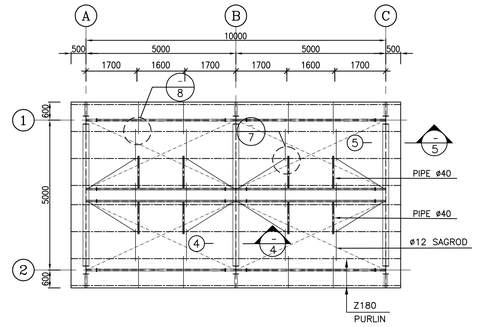

1:100 (3) ROOF PURLIN PLAN

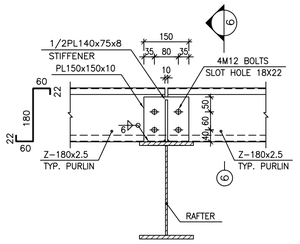

1:10 (4)

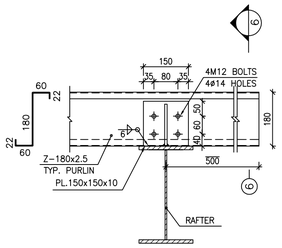

1:10 (5)

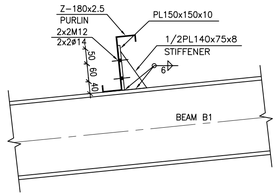

1:10 (6)

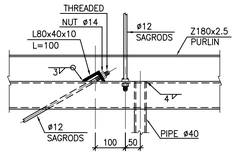

1:10 (7)

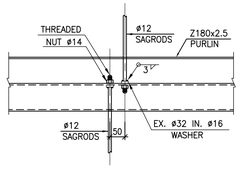

1:10 (8)

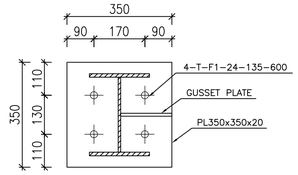

1:10 (9) BASE PLATE 1 N=4

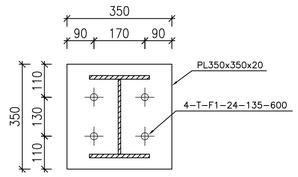

1:10 (10) BASE PLATE 2 N=2

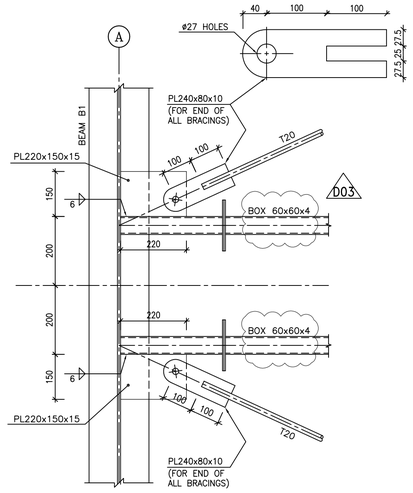

1:10 (11) TYP. ROOF BRACINGS CONNECTION

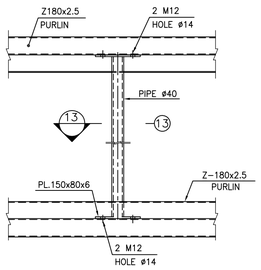

1:10 (12) TYP. PIPE TO PURLIN CONNECTION DETAIL

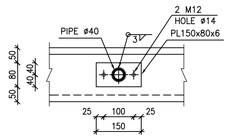

1:10 (13)

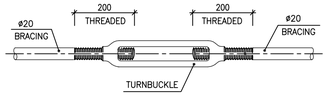

N.T.S. (14) TYP. TURNBUCKLE

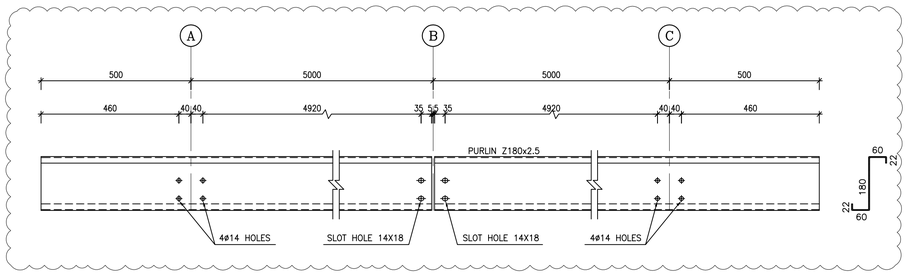

1:10 (15) TYPICAL ROOF PURLIN

D03

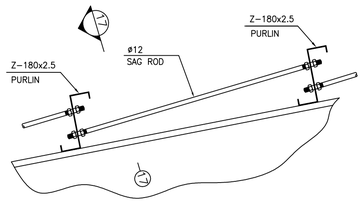

N.T.S. (16) TYPICAL CONNECTION SAGROD TO PURLIN

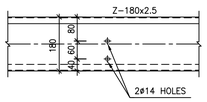

1:10 (17)

NOTES

1) ALL ELEVATIONS AND COORDINATES ARE IN "m" AND DIMENSIONS ARE IN "mm" UNLESS OTHERWISE NOTED.
2) ALL DIMENSIONS AND ELEVATIONS SHALL BE CHECKED BY THE CONTRACTOR PRIOR TO CONSTRUCTION.
3) ACCORDING TO THE SPECIFICATION OF CONCRETE WORKS:
"BK-GNRL-PEDCO-000-ST-SP-0001",28 DAYS CHARACTERISTIC COMPRESSIVE STRENGTH OF MAIN CONCRETE IS 30 MPa(ON CYLINDRICAL SPECIMEN)
4) ACCORDING TO THE SPECIFICATION OF CONCRETE WORKS:
"BK-GNRL-PEDCO-000-ST-SP-0001",28 DAYS CHARACTERISTIC COMPRESSIVE STRENGTH OF LEAN CONCRETE IS 15 MPa(ON CYLINDRICAL SPECIMEN)
5) STRUCTURAL STEEL SHAPE & PLATES SHALL CONFORM TO S235JR WITH MINIMUM YIELD STRESS OF Fy=2400 kg/cm^2
6) ALL BOLTS ARE HIGH STRENGTH BOLTS GRADE 8.8 WITH MINIMUM TENSILE STRENGTH OF Fu=800 MPa.
7) ANCHOR BOLTS SHALL BE ASTM A307 GRADE C.
8) ALL WELDING SHALL BE IN ACCORDANCE WITH THE LATEST EDITION OF STRUCTURAL WELDING CODE, AWS D1.1/D1.1M.
9) TYPE OF WELDING ELECTRODE SHALL BE E70 AND IN ACCORDANCE WITH SPECIFICATION FOR STRUCTURAL STEEL FABRICATION AND ERECTION.
BK-GENERAL-PEDCO-000-ST-SP-0003
BK-GENERAL-PEDCO-000-ST-SP-0005
10) FLANGES SHOULD BE CONTINUOUSLY WELDED TO THE WEB.
11) ALL ANCHOR BOLTS MUST BE HOT DIP GALVANIZED

±0.00 = +11.20(F.G.L)MSL

LEGEND

F.G.L. : FINISH GROUND LEVEL
B.O.B.PL. : BOTTOM OF BASE PLATE
C.O.ST. : CENTER OF STRUT
C.O.B. : CENTER OF BEAM
T.O.CR. : TOP OF CRANE
T.O.S. : TOP OF STEEL
N.T.S : NOT TO SCALED
C.O.ST. : CENTER OF STRUT

REINFORCED CONCRETE
LEAN CONCRETE
GROUND

REFERENCE DRAWING	DRG. No.
CALCULATION NOTE FOR CHEMICAL INJECTION AND STORAGE SHELTER	BK-GCS-PEDCO-120-ST-CN-0026
FOUNDATION DRAWING FOR CHEMICAL INJECTION AND STORAGE SHELTER	BK-GCS-PEDCO-120-ST-DW-0057
ARCHITECTURAL DRAWING FOR CHEMICAL INJ. PAKAGES /CHEMICAL STORAGE SHELTER	BK-GCS-PEDCO-120-AR-DW-0004
STANDARD DRAWING FOR ANCHOR BOLTS	BK-GNRAL-PEDCO-000-ST-DW-0002
GENERAL NOTES-STEEL STRUCTURES	BK-GNRAL-PEDCO-000-ST-DW-0011
GENERAL NOTES-REINFORCED CONCRETE STRUCTURES	BK-GNRAL-PEDCO-000-ST-DW-0012
SPECIFICATION FOR ERECTION OF STEEL STRUCTURES	BK-GNRAL-PEDCO-000-ST-SP-0005
SPECIFICATION FOR FABRICATION OF STEEL STRUCTURES	BK-GNRAL-PEDCO-000-ST-SP-0003
SPECIFICATION FOR STEEL STRUCTURAL WORK	BK-GNRAL-PEDCO-000-ST-SP-0008
UNIT PLOT PLAN DRAWING	BK-GCS-PEDCO-120-PL-PY-0001
GEOTECHNICAL INVESTIGATION REPORT FOR COMPRESSOR STATION	BK-GCS-PEDCO-120-GT-RT-0001
SPECIFICATION FOR GROUTING	BK-GNRAL-PEDCO-000-ST-SP-0004
SPECIFICATION FOR PAINTING	BK-GNRAL-PEDCO-000-PI-SP-0006

KEY PLAN

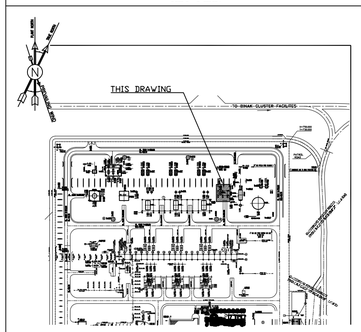

REV.	DATE	P.O.I.S	PREP.	CHK.	APP.	AUT.
D03	NOV.2023	IFA	R.BERLOUIE	M.FAKHARIAN	S.FARAMARZPOUR	**.**
D02	SEP.2023	IFA	R.BERLOUIE	M.FAKHARIAN	S.FARAMARZPOUR	**.**
D01	JUN.2023	IFC	R.BERLOUIE	M.FAKHARIAN	A.M.MOHSENI	**.**
D00	AUG.2022	IFC	R.BERLOUIE	M.FAKHARIAN	M.MEHRSHAD	**.**

REV.	DESCRIPTION	CHECKED BY	CHECKED DATE	REV. APPR. BY	REV. APPR. DATE
***	**********	**.**	***.****	**.**	***.****

PROJECT NAME: *BINAK OILFIELD DEVELOPMENT/SURFACE FACILITIES GAS COMPRESSOR STATION*

PROJECT NO.: 971020

EPC CONTRACTOR: HIRGAN ENERGY – DESIGN & INSPECTION COMPANIES

EPD/EPC CONTRACTOR (GC): PETROIRAN DEVELOPMENT COMPANY (PEDCO)

أصل و کلیه نسخ این نقشه و حق اقتباس متعلق به شرکت ملی مناطق نفت خیز جنوب میباشد.
THE ORIGINAL AND ALL COPIES OF THIS DRAWING TOGETHER WITH THE COPYRIGHT THEREIN ARE THE SOLE PROPERTY OF N.I.S.O.C./ FIELDS

BINAK OILFIELD DEVELOPMENT SURFACE FACILITIES
GAS COMPRESSOR STATION

DATE	SCALE	DRAWING BY	CHECKED BY	PROJECT ENG.

NO CONSTRUCTION PERMITTED UNLESS DRAWING APPROVED

APPROVED FOR CONSTRUCTION BY: DATE:

DRAWING TITLE: *STRUCTURAL DRAWING FOR CHEMICAL INJECTION AND STORAGE SHELTER*

SCALE	SIZE	DRAWING NO.	SHEET NO.	REV.
AS SHOWN	A1	BK-GCS-PEDCO-120-ST-DW-0058	1 OF 4	D03

BUDGET REF.	LOCATION	SIZE	CLASS	SERIAL NO.	SHEET	REVISION
053-073-9184	F	4	M	709195	1	D03

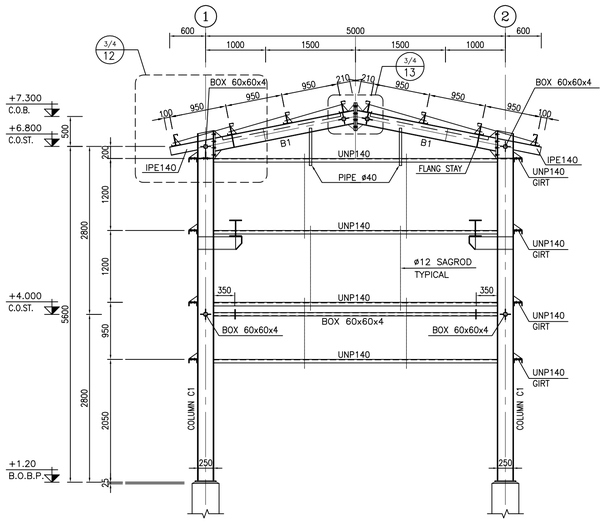

1:50 (1) FRAMING ELEVATION ON AXIS A

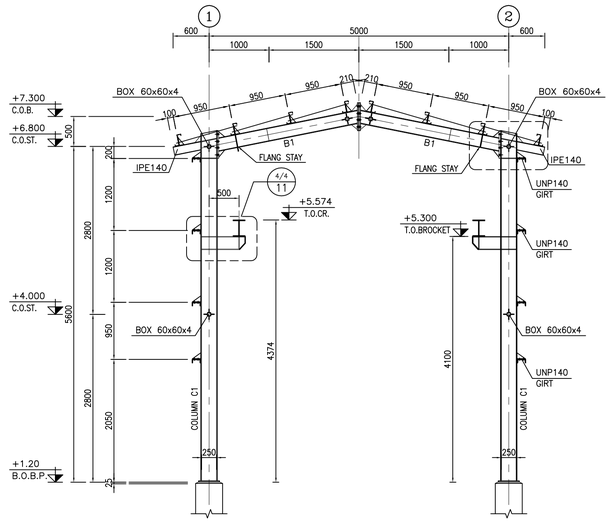

1:50 (2) FRAMING ELEVATION ON AXIS B

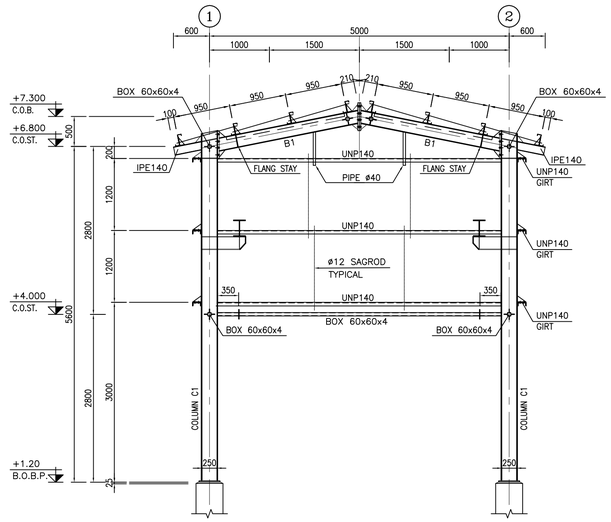

1:50 (3) FRAMING ELEVATION ON AXIS C

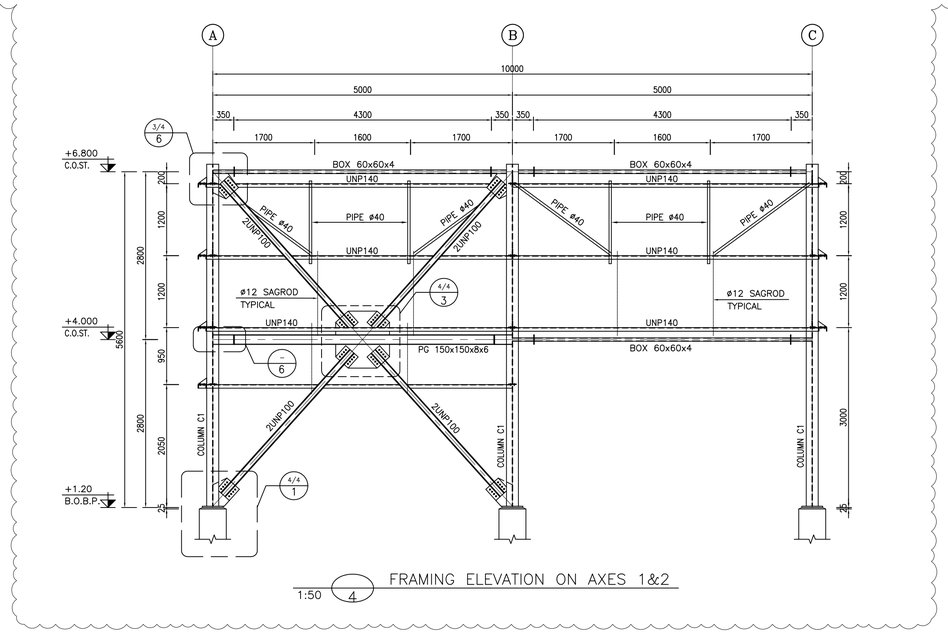

1:50 (4) FRAMING ELEVATION ON AXES 1&2

D03

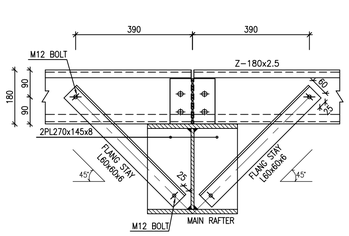

1:10 (5) FLANG STAY TYPICAL DETAIL

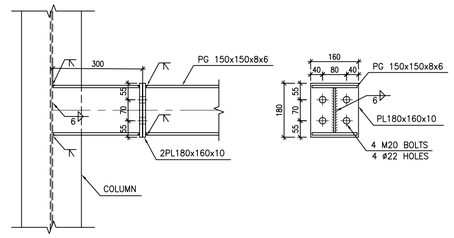

1:10 (6) TYPICAL DETAIL OF PG150x150x6

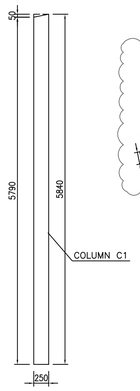

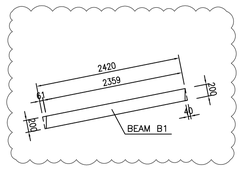

D03

1:50 (11) WEB OF COLUMN C1 & BEAM BI DETAIL

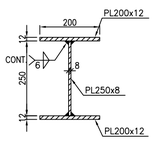

1:10 (7) COLUMN C1

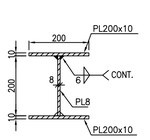

1:10 (8) BEAM B1

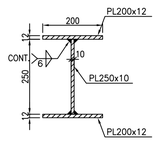

1:10 (9) CRANE RUNWAY BEAM

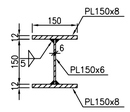

1:10 (10) P.G.A. 150

NOTES

1) ALL ELEVATIONS AND COORDINATES ARE IN "m" AND DIMENSIONS ARE IN "mm" UNLESS OTHERWISE NOTED.
2) ALL DIMENSIONS AND ELEVATIONS SHALL BE CHECKED BY THE CONTRACTOR PRIOR TO CONSTRUCTION.
3) ACCORDING TO THE SPECIFICATION OF CONCRETE WORKS: "BK-GNRL-PEDCO-000-ST-SP-0001",28 DAYS CHARACTERISTIC COMPRESSIVE STRENGTH OF MAIN CONCRETE IS 30 MPa(ON CYLINDRICAL SPECIMEN)
4) ACCORDING TO THE SPECIFICATION OF CONCRETE WORKS: "BK-GNRL-PEDCO-000-ST-SP-0001",28 DAYS CHARACTERISTIC COMPRESSIVE STRENGTH OF LEAN CONCRETE IS 15 MPa(ON CYLINDRICAL SPECIMEN)
5) STRUCTURAL STEEL SHAPE & PLATES SHALL CONFORM TO S235JR WITH MINIMUM YIELD STRESS OF Fy=2400 kg/cm^2
6) ALL BOLTS ARE HIGH STRENGTH BOLTS GRADE 8.8 WITH MINIMUM TENSILE STRENGTH OF Fu=800 MPa.
7) ANCHOR BOLTS SHALL BE ASTM A307 GRADE C.
8) ALL WELDING SHALL BE IN ACCORDANCE WITH THE LATEST EDITION OF STRUCTURAL WELDING CODE, AWS D1.1/D1.1M.
9) TYPE OF WELDING ELECTRODE SHALL BE E70 AND IN ACCORDANCE WITH SPECIFICATION FOR STRUCTURAL STEEL FABRICATION AND ERECTION.
   BK-GENERAL-PEDCO-000-ST-SP-0003
   BK-GENERAL-PEDCO-000-ST-SP-0005
10) FLANGES SHOULD BE CONTINUOUSLY WELDED TO THE WEB.
11) ALL ANCHOR BOLTS MUST BE HOT DIP GALVANIZED

LEGEND

F.G.L. : FINISH GROUND LEVEL
B.O.B.PL. : BOTTOM OF BASE PLATE
C.O.ST. : CENTER OF STRUT
C.O.B. : CENTER OF BEAM
T.O.CR. : TOP OF CRANE
T.O.S. : TOP OF STEEL
N.T.S : NOT TO SCALED
C.O.ST. : CENTER OF STRUT

REINFORCED CONCRETE
LEAN CONCRETE
GROUND

REFERENCE DRAWING	DRG. No.
CALCULATION NOTE FOR CHEMICAL INJECTION AND STORAGE SHELTER	BK-GCS-PEDCO-120-ST-CN-0026
FOUNDATION DRAWING FOR CHEMICAL INJECTION AND STORAGE SHELTER	BK-GCS-PEDCO-120-ST-DW-0057
ARCHITECTURAL DRAWING FOR CHEMICAL INJ. PAKAGES /CHEMICAL STORAGE SHELTER	BK-GCS-PEDCO-120-AR-DW-0004
STANDARD DRAWING FOR ANCHOR BOLTS	BK-GNRAL-PEDCO-000-ST-DW-0002
GENERAL NOTES-STEEL STRUCTURES	BK-GNRAL-PEDCO-000-ST-DW-0011
GENERAL NOTES-REINFORCED CONCRETE STRUCTURES	BK-GNRAL-PEDCO-000-ST-DW-0012
SPECIFICATION FOR ERECTION OF STEEL STRUCTURES	BK-GNRAL-PEDCO-000-ST-SP-0005
SPECIFICATION FOR FABRICATION OF STEEL STRUCTURES	BK-GNRAL-PEDCO-000-ST-SP-0003
SPECIFICATION FOR STEEL STRUCTURAL WORK	BK-GNRAL-PEDCO-000-ST-SP-0008
UNIT PLOT PLAN DRAWING	BK-GCS-PEDCO-120-PL-PY-0001
GEOTECHNICAL INVESTIGATION REPORT FOR COMPRESSOR STATION	BK-GCS-PEDCO-120-GT-RT-0001
SPECIFICATION FOR GROUTING	BK-GNRAL-PEDCO-000-ST-SP-0004
SPECIFICATION FOR PAINTING	BK-GNRAL-PEDCO-000-PI-SP-0006

KEY PLAN

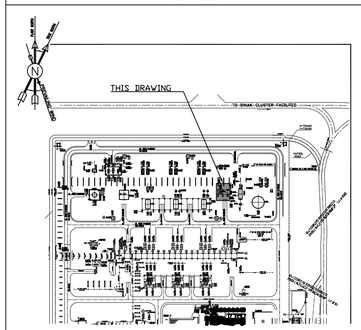

REV.	DATE	P.O.I.S	PREP.	CHK.	APP.	AUT.
D03	NOV.2023	IFA	R.BERLOUIE	M.FAKHARIAN	S.FARAMARZPOUR	**.**
D02	SEP.2023	IFA	R.BERLOUIE	M.FAKHARIAN	S.FARAMARZPOUR	**.**
D01	JUN.2023	IFC	R.BERLOUIE	M.FAKHARIAN	A.M.MOHSENI	**.**
D00	AUG.2022	IFC	R.BERLOUIE	M.FAKHARIAN	M.MEHRSHAD	**.**

REV.	DESCRIPTION	CHECKED BY	CHECKED DATE	REV. APPR. BY	REV. APPR. DATE
***	**********	**.**	***.****	**.**	***.****

PROJECT NAME: *BINAK OILFIELD DEVELOPMENT/SURFACE FACILITIES GAS COMPRESSSOR STATION*

PROJECT NO.: 971020

EPC CONTRACTOR: HIRGAN ENERGY – DESIGN & INSPECTION COMPANIES

EPD/EPC CONTRACTOR (GC): PETROIRAN DEVELOPMENT COMPANY (PEDCO)

اصل و کلیه نسخ این نقشه و حق اقتباس متعلق به شرکت ملی مناطق نفت خیز جنوب میباشد.
THE ORIGINAL AND ALL COPIES OF THIS DRAWING TOGETHER WITH THE COPYRIGHT THEREIN ARE THE SOLE PROPERTY OF N.I.S.O.C./ FIELDS

BINAK OILFIELD DEVELOPMENT SURFACE FACILITIES
GAS COMPRESSOR STATION

DATE	SCALE	DRAWING BY	CHECKED BY	PROJECT ENG.

DRAWING TITLE: *STRUCTURAL DRAWING FOR CHEMICAL INJECTION AND STORAGE SHELTER*

NO CONSTRUCTION PERMITTED UNLESS DRAWING APPROVED
APPROVED FOR CONSTRUCTION BY: DATE:

SCALE	SIZE	DRAWING NO.	SHEET NO.	REV.	BUDGET REF.	LOCATION	SIZE	CLASS	SERIAL NO.	SHEET	REVISION
AS SHOWN	A1	BK-GCS-PEDCO-120-ST-DW-0058	2 OF 4	D03	053-073-9184	F	4	M	709195	2	D03

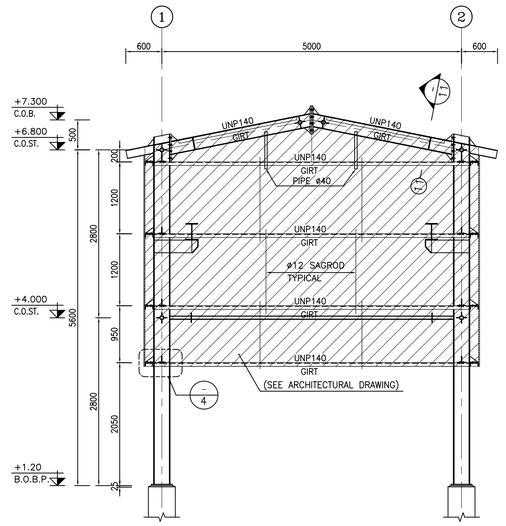

1:50 (1) FRAMING ELEVATION ON AXIS A

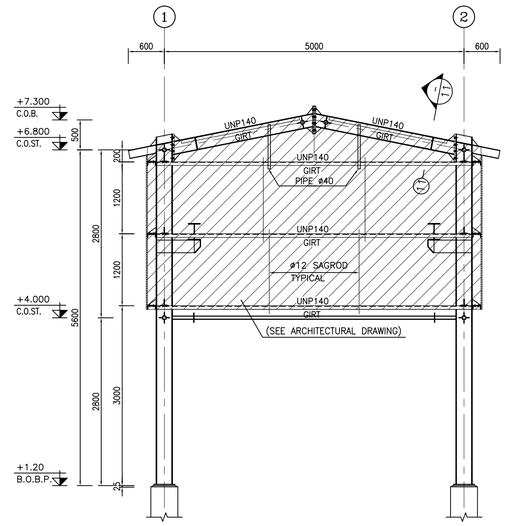

1:50 (2) FRAMING ELEVATION ON AXIS C

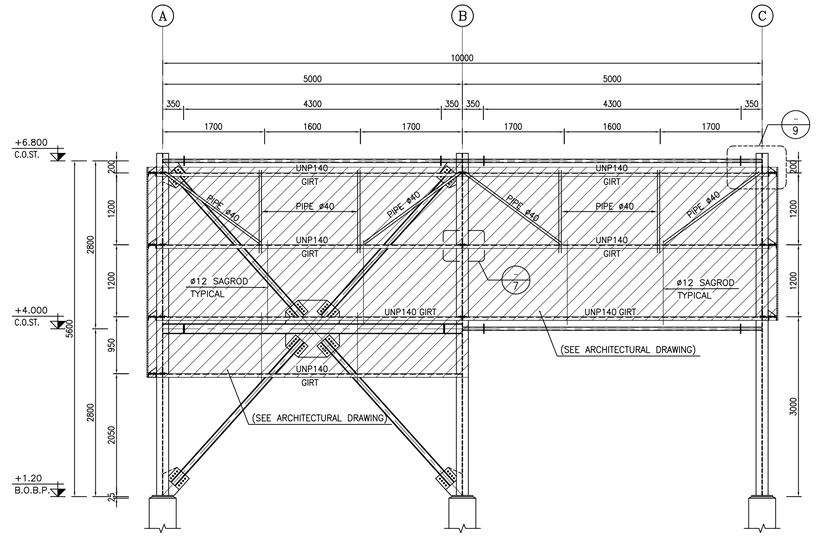

1:50 (3) FRAMING ELEVATION ON AXES 1&2

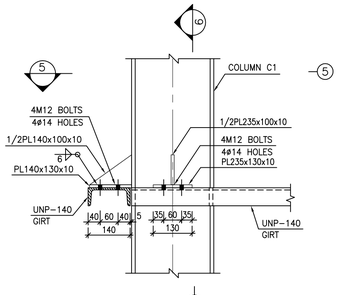

1:10 (4)

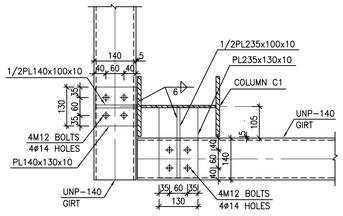

1:10 (5)

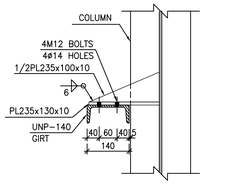

1:10 (6)

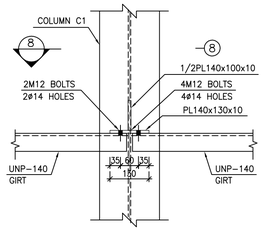

1:10 (7)

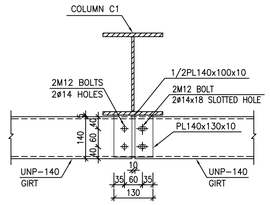

1:10 (8)

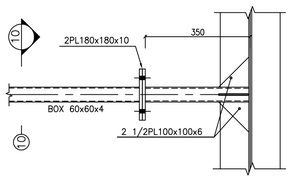

1:10 (9)

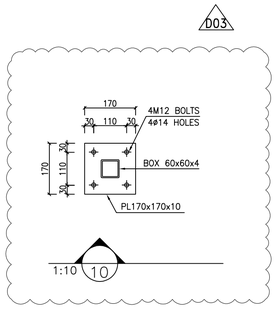

1:10 (10)

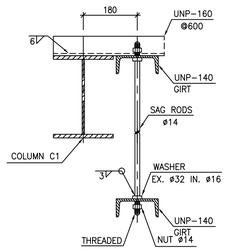

1:10 (11)

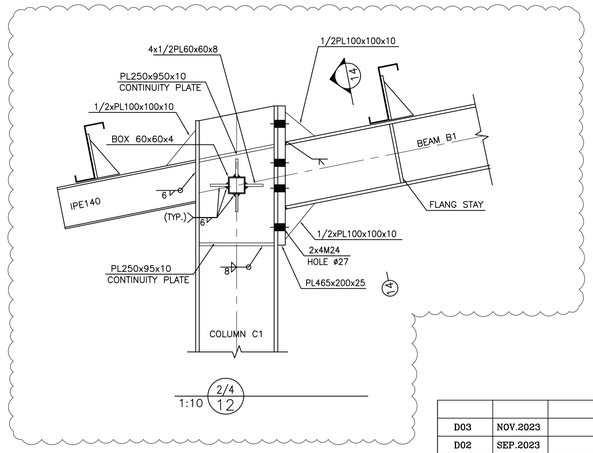

1:10 (2/4 12)

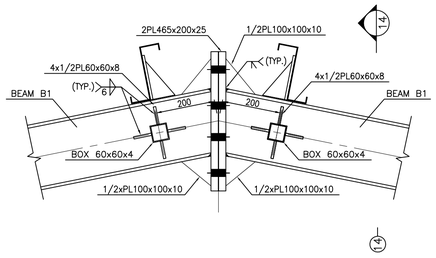

1:10 (2/4 13)

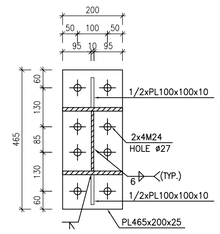

1:10 (14)

NOTES

1) ALL ELEVATIONS AND COORDINATES ARE IN "m" AND DIMENSIONS ARE IN "mm" UNLESS OTHERWISE NOTED.
2) ALL DIMENSIONS AND ELEVATIONS SHALL BE CHECKED BY THE CONTRACTOR PRIOR TO CONSTRUCTION.
3) ACCORDING TO THE SPECIFICATION OF CONCRETE WORKS:
   "BK-GNRL-PEDCO-000-ST-SP-0001",28 DAYS CHARACTERISTIC
   COMPRESSIVE STRENGTH OF MAIN CONCRETE IS 30 MPa(ON CYLINDRICAL SPECIMEN)
4) ACCORDING TO THE SPECIFICATION OF CONCRETE WORKS:
   "BK-GNRL-PEDCO-000-ST-SP-0001",28 DAYS CHARACTERISTIC
   COMPRESSIVE STRENGTH OF LEAN CONCRETE IS 15 MPa(ON CYLINDRICAL SPECIMEN)
5) STRUCTURAL STEEL SHAPE & PLATES SHALL CONFORM TO S235JR
   WITH MINIMUM YIELD STRESS OF Fy=2400 kg/cm^2
6) ALL BOLTS ARE HIGH STRENGTH BOLTS GRADE 8.8 WITH MINIMUM TENSILE
   STRENGTH OF Fu=800 MPa.
7) ANCHOR BOLTS SHALL BE ASTM A307 GRADE C.
8) ALL WELDING SHALL BE IN ACCORDANCE WITH THE LATEST EDITION OF
   STRUCTURAL WELDING CODE, AWS D1.1/D1.1M.
9) TYPE OF WELDING ELECTRODE SHALL BE E70 AND IN ACCORDANCE WITH
   SPECIFICATION FOR STRUCTURAL STEEL FABRICATION AND ERECTION.
   BK-GENERAL-PEDCO-000-ST-SP-0003
   BK-GENERAL-PEDCO-000-ST-SP-0005
10) FLANGES SHOULD BE CONTINUOUSLY WELDED TO THE WEB.
11) ALL ANCHOR BOLTS MUST BE HOT DIP GALVANIZED

±0.00 = +11.20(F.G.L)MSL

LEGEND

F.G.L. : FINISH GROUND LEVEL
B.O.B.PL. : BOTTOM OF BASE PLATE
C.O.ST. : CENTER OF STRUT
C.O.B. : CENTER OF BEAM
T.O.CR. : TOP OF CRANE
T.O.S. : TOP OF STEEL
N.T.S : NOT TO SCALED
C.O.ST. : CENTER OF STRUT

REINFORCED CONCRETE
LEAN CONCRETE
GROUND

REFERENCE DRAWING	DRG. No.
CALCULATION NOTE FOR CHEMICAL INJECTION AND STORAGE SHELTER	BK-GCS-PEDCO-120-ST-CN-0026
FOUNDATION DRAWING FOR CHEMICAL INJECTION AND STORAGE SHELTER	BK-GCS-PEDCO-120-ST-DW-0057
ARCHITECTURAL DRAWING FOR CHEMICAL INJ. PAKAGES /CHEMICAL STORAGE SHELTER	BK-GCS-PEDCO-120-AR-DW-0004
STANDARD DRAWING FOR ANCHOR BOLTS	BK-GNRAL-PEDCO-000-ST-DW-0002
GENERAL NOTES-STEEL STRUCTURES	BK-GNRAL-PEDCO-000-ST-DW-0011
GENERAL NOTES-REINFORCED CONCRETE STRUCTURES	BK-GNRAL-PEDCO-000-ST-DW-0012
SPECIFICATION FOR ERECTION OF STEEL STRUCTURES	BK-GNRAL-PEDCO-000-ST-SP-0005
SPECIFICATION FOR FABRICATION OF STEEL STRUCTURES	BK-GNRAL-PEDCO-000-ST-SP-0003
SPECIFICATION FOR STEEL STRUCTURAL WORK	BK-GNRAL-PEDCO-000-ST-SP-0008
UNIT PLOT PLAN DRAWING	BK-GCS-PEDCO-120-PL-PY-0001
GEOTECHNICAL INVESTIGATION REPORT FOR COMPRESSOR STATION	BK-GCS-PEDCO-120-GT-RT-0001
SPECIFICATION FOR GROUTING	BK-GNRAL-PEDCO-000-ST-SP-0004
SPECIFICATION FOR PAINTING	BK-GNRAL-PEDCO-000-PI-SP-0006

KEY PLAN

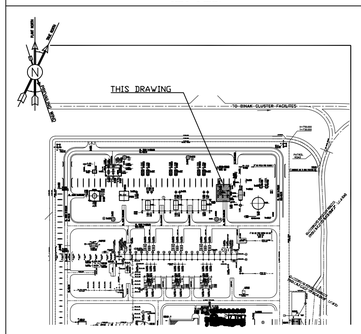

REV.	DATE	P.O.I.S	PREP.	CHK.	APP.	AUT.
D03	NOV.2023	IFA	R.BERLOUIE	M.FAKHARIAN	S.FARAMARZPOUR	**.**
D02	SEP.2023	IFA	R.BERLOUIE	M.FAKHARIAN	S.FARAMARZPOUR	**.**
D01	JUN.2023	IFC	R.BERLOUIE	M.FAKHARIAN	A.M.MOHSENI	**.**
D00	AUG.2022	IFC	R.BERLOUIE	M.FAKHARIAN	M.MEHRSHAD	**.**

REV.	DESCRIPTION	BY	DATE	BY	DATE
		CHECKED		REV. APPR.	
***	**********	**.**	***.****	**.**	***.****

PROJECT NAME: *BINAK OILFIELD DEVELOPMENT/SURFACE FACILITIES GAS COMPRESSOR STATION*

PROJECT NO.: 971020

EPC CONTRACTOR: HIRGAN ENERGY – DESIGN & INSPECTION COMPANIES

EPD/EPC CONTRACTOR (GC): PETROIRAN DEVELOPMENT COMPANY (PEDCO)

اصل و کلیه نسخ این نقشه و حق اقتباس متعلق به شرکت ملی مناطق نفت خیز جنوب میباشد.

THE ORIGINAL AND ALL COPIES OF THIS DRAWING TOGETHER WITH THE COPYRIGHT THEREIN ARE THE SOLE PROPERTY OF N.I.S.O.C./ FIELDS

BINAK OILFIELD DEVELOPMENT SURFACE FACILITIES GAS COMPRESSOR STATION

DATE	SCALE	DRAWING BY	CHECKED BY	PROJECT ENG.

NO CONSTRUCTION PERMITTED UNLESS DRAWING APPROVED

APPROVED FOR CONSTRUCTION BY: DATE:

DRAWING TITLE: *STRUCTURAL DRAWING FOR CHEMICAL INJECTION AND STORAGE SHELTER*

SCALE	SIZE	DRAWING NO.	SHEET NO.	REV.	BUDGET REF.	LOCATION	SIZE	CLASS	SERIAL NO.	SHEET	REVISION
AS SHOWN	A1	BK-GCS-PEDCO-120-ST-DW-0058	3 OF 4	D03	053-073-9184	F	4	M	709195	3	D03

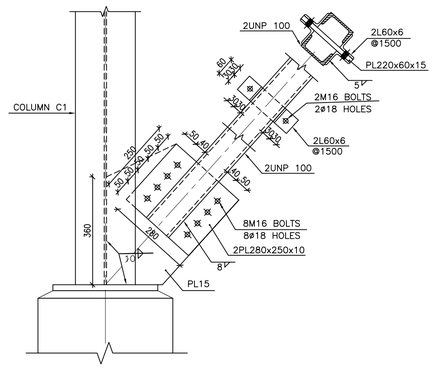

1:10 (2/4 1)

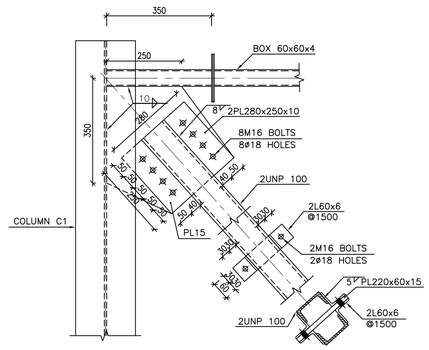

1:10 (2/4 2)

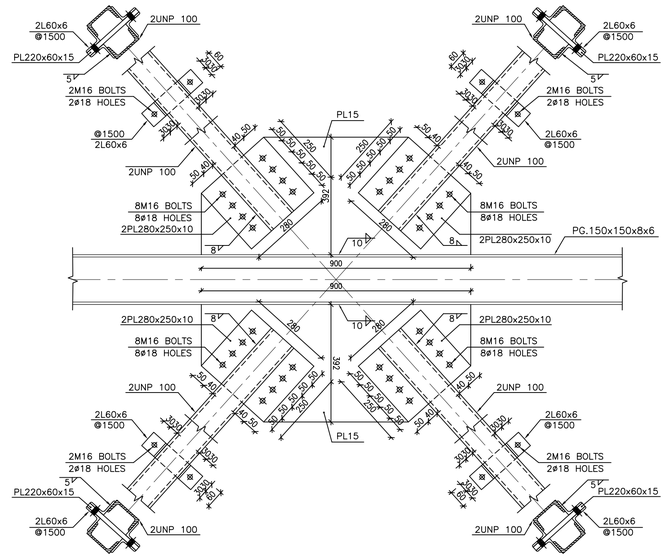

1:10 (2/4 3)

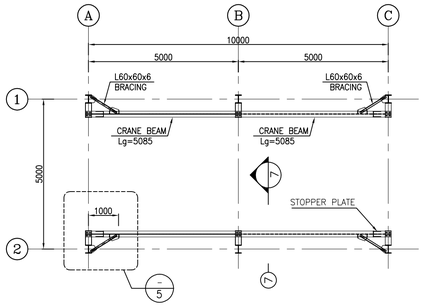

1:100 (4) RUNWAY BEAM LAYOUT PLAN

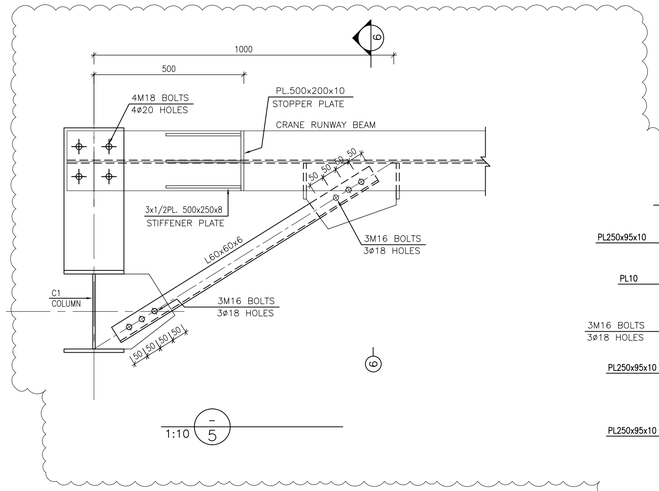

1:10 (- 5)

D03

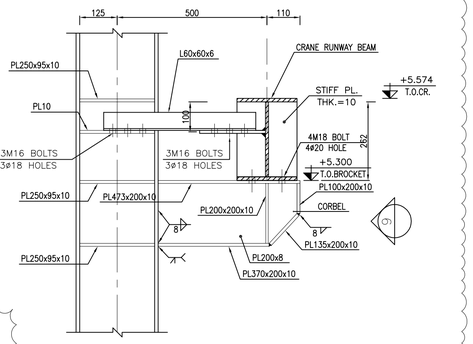

1:10 (6)

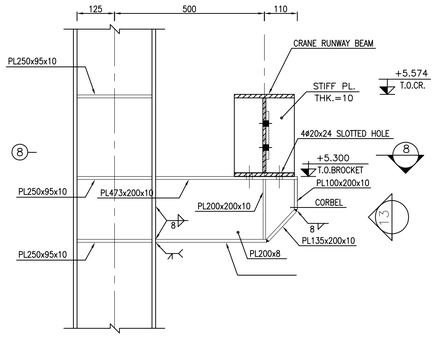

1:10 (7)

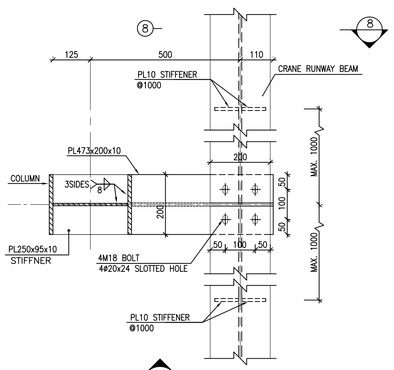

1:10 (8)

D03

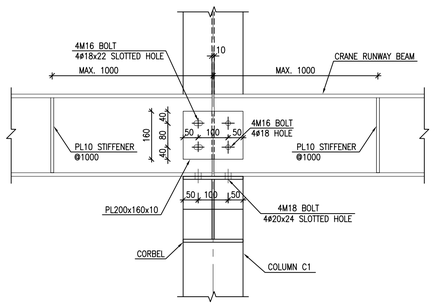

1:50 (9)

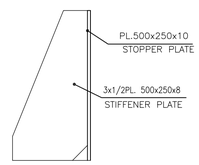

1:10 (11) STOPPER DETAIL

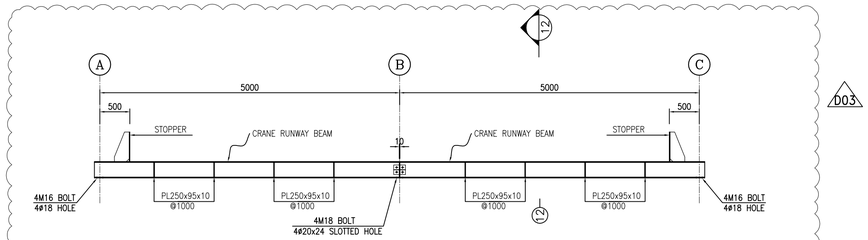

1:50 (10) RUNWAY BEAM VIEW

D03

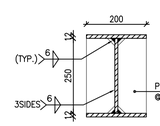

1:10 (12) CRANE RUNWAY BEAM

NOTES

1) ALL ELEVATIONS AND COORDINATES ARE IN "m" AND DIMENSIONS ARE IN "mm" UNLESS OTHERWISE NOTED.
2) ALL DIMENSIONS AND ELEVATIONS SHALL BE CHECKED BY THE CONTRACTOR PRIOR TO CONSTRUCTION.
3) ACCORDING TO THE SPECIFICATION OF CONCRETE WORKS:
   "BK-GNRL-PEDCO-000-ST-SP-0001",28 DAYS CHARACTERISTIC COMPRESSIVE STRENGTH OF MAIN CONCRETE IS 30 MPa(ON CYLINDRICAL SPECIMEN)
4) ACCORDING TO THE SPECIFICATION OF CONCRETE WORKS:
   "BK-GNRL-PEDCO-000-ST-SP-0001",28 DAYS CHARACTERISTIC COMPRESSIVE STRENGTH OF LEAN CONCRETE IS 15 MPa(ON CYLINDRICAL SPECIMEN)
5) STRUCTURAL STEEL SHAPE & PLATES SHALL CONFORM TO S235JR WITH MINIMUM YIELD STRESS OF Fy=2400 kg/cm^2
6) ALL BOLTS ARE HIGH STRENGTH BOLTS GRADE 8.8 WITH MINIMUM TENSILE STRENGTH OF Fu=800 MPa.
7) ANCHOR BOLTS SHALL BE ASTM A307 GRADE C.
8) ALL WELDING SHALL BE IN ACCORDANCE WITH THE LATEST EDITION OF STRUCTURAL WELDING CODE, AWS D1.1/D1.1M.
9) TYPE OF WELDING ELECTRODE SHALL BE E70 AND IN ACCORDANCE WITH SPECIFICATION FOR STRUCTURAL STEEL FABRICATION AND ERECTION.
   BK-GENERAL-PEDCO-000-ST-SP-0003
   BK-GENERAL-PEDCO-000-ST-SP-0005
10) FLANGES SHOULD BE CONTINUOUSLY WELDED TO THE WEB.
11) ALL ANCHOR BOLTS MUST BE HOT DIP GALVANIZED

±0.00 = +11.20(F.G.L)MSL

LEGEND

F.G.L. : FINISH GROUND LEVEL
B.O.B.PL. : BOTTOM OF BASE PLATE
C.O.ST. : CENTER OF STRUT
C.O.B. : CENTER OF BEAM
T.O.CR. : TOP OF CRANE
T.O.S. : TOP OF STEEL
N.T.S : NOT TO SCALED
C.O.ST. : CENTER OF STRUT

REINFORCED CONCRETE
LEAN CONCRETE
GROUND

REFERENCE DRAWING	DRG. No.
CALCULATION NOTE FOR CHEMICAL INJECTION AND STORAGE SHELTER	BK-GCS-PEDCO-120-ST-CN-0026
FOUNDATION DRAWING FOR CHEMICAL INJECTION AND STORAGE SHELTER	BK-GCS-PEDCO-120-ST-DW-0057
ARCHITECTURAL DRAWING FOR CHEMICAL INJ. PAKAGES /CHEMICAL STORAGE SHELTER	BK-GCS-PEDCO-120-AR-DW-0004
STANDARD DRAWING FOR ANCHOR BOLTS	BK-GNRAL-PEDCO-000-ST-DW-0002
GENERAL NOTES-STEEL STRUCTURES	BK-GNRAL-PEDCO-000-ST-DW-0011
GENERAL NOTES-REINFORCED CONCRETE STRUCTURES	BK-GNRAL-PEDCO-000-ST-DW-0012
SPECIFICATION FOR ERECTION OF STEEL STRUCTURES	BK-GNRAL-PEDCO-000-ST-SP-0005
SPECIFICATION FOR FABRICATION OF STEEL STRUCTURES	BK-GNRAL-PEDCO-000-ST-SP-0003
SPECIFICATION FOR STEEL STRUCTURAL WORK	BK-GNRAL-PEDCO-000-ST-SP-0008
UNIT PLOT PLAN DRAWING	BK-GCS-PEDCO-120-PL-PY-0001
GEOTECHNICAL INVESTIGATION REPORT FOR COMPRESSOR STATION	BK-GCS-PEDCO-120-GT-RT-0001
SPECIFICATION FOR GROUTING	BK-GNRAL-PEDCO-000-ST-SP-0004
SPECIFICATION FOR PAINTING	BK-GNRAL-PEDCO-000-PI-SP-0006

KEY PLAN

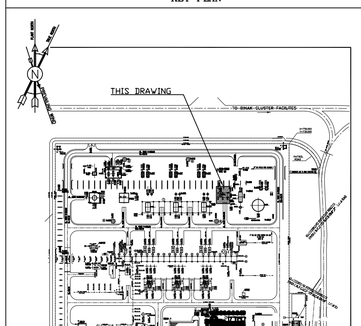

REV.	DATE	P.O.I.S	PREP.	CHK.	APP.	AUT.
D03	NOV.2023	IFA	R.BERLOUIE	M.FAKHARIAN	S.FARAMARZPOUR	**.**
D02	SEP.2023	IFA	R.BERLOUIE	M.FAKHARIAN	S.FARAMARZPOUR	**.**
D01	JUN.2023	IFC	R.BERLOUIE	M.FAKHARIAN	A.M.MOHSENI	**.**
D00	AUG.2022	IFC	R.BERLOUIE	M.FAKHARIAN	M.MEHRSHAD	**.**

REV.	DESCRIPTION	BY	DATE	BY	DATE
		CHECKED		REV. APPR.	
***	**********	**.**	***.****	**.**	***.****

اصل و کلیه نسخ این نقشه و حق اقتباس متعلق به شرکت ملی مناطق نفت خیز جنوب میباشد.

THE ORIGINAL AND ALL COPIES OF THIS DRAWING TOGETHER WITH THE COPYRIGHT THEREIN ARE THE SOLE PROPERTY OF N.I.S.O.C./ FIELDS

PROJECT NAME: *BINAK OILFIELD DEVELOPMENT/SURFACE FACILITIES GAS COMPRESSOR STATION*

PROJECT NO.: 971020

EPC CONTRACTOR: HIRGAN ENERGY – DESIGN & INSPECTION COMPANIES

EPD/EPC CONTRACTOR (GC): PETROIRAN DEVELOPMENT COMPANY (PEDCO)

BINAK OILFIELD DEVELOPMENT SURFACE FACILITIES GAS COMPRESSOR STATION

DATE	SCALE	DRAWING BY	CHECKED BY	PROJECT ENG.

DRAWING TITLE: *STRUCTURAL DRAWING FOR CHEMICAL INJECTION AND STORAGE SHELTER*

NO CONSTRUCTION PERMITTED UNLESS DRAWING APPROVED

APPROVED FOR CONSTRUCTION | BY: | DATE:

SCALE	SIZE	DRAWING NO.	SHEET NO.	REV.	BUDGET REF.	LOCATION	SIZE	CLASS	SERIAL NO.	SHEET	REVISION
AS SHOWN	A1	BK-GCS-PEDCO-120-ST-DW-0058	4 OF 4	D03	053-073-9184	F	4	M	709195	4	D03