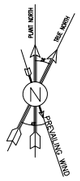

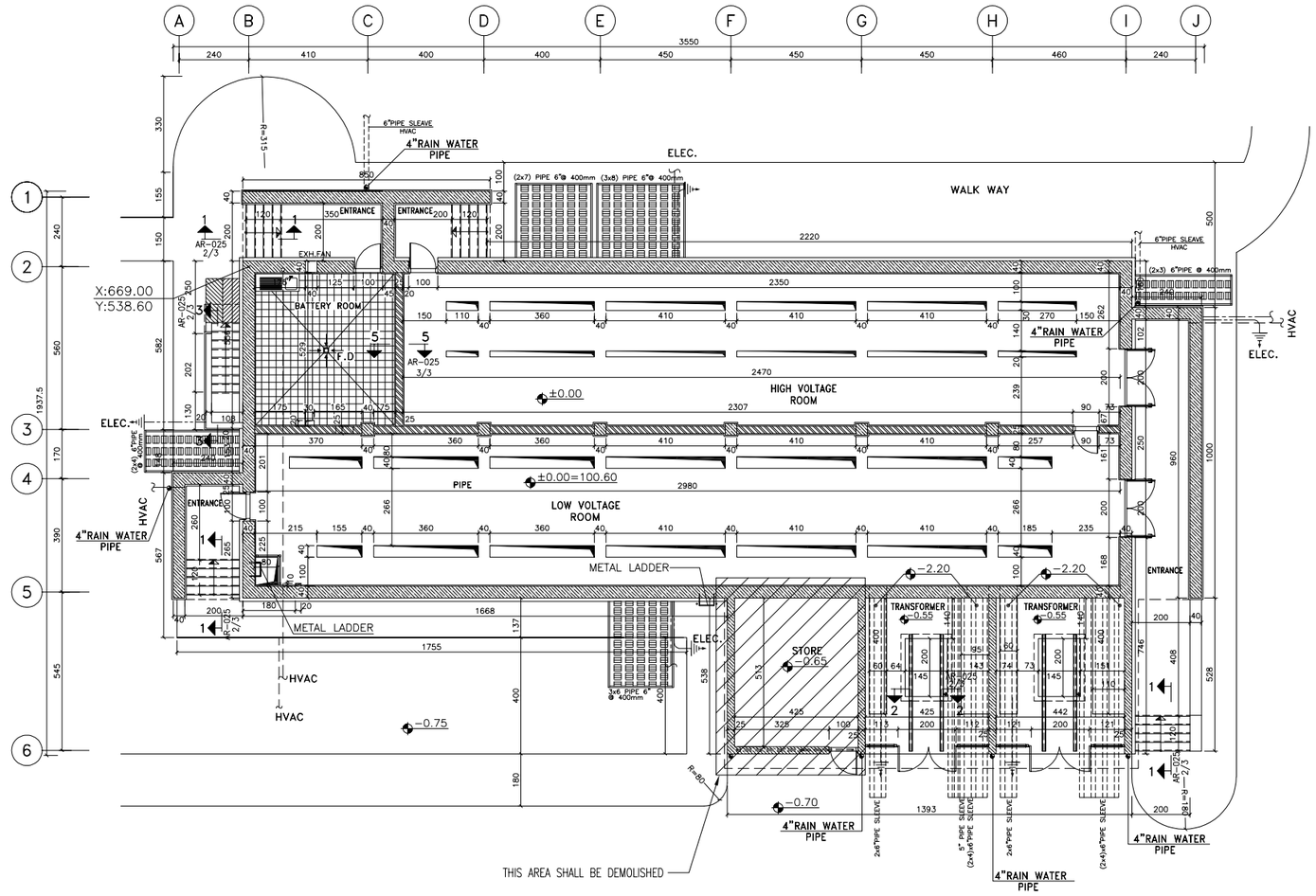

SC.1:100 — 1 — EXISTING PLAN

NOTES

1. ALL DIMENSIONS ARE IN CENTIMETER & ALL ELEVATIONS ARE IN METER.
2. ALL DIMENSIONS AND ELEVATIONS SHALL BE CHECKED BY THE CONTRACTOR PRIOR TO CONSTRUCTION.
3. CONTRACTOR SHALL COMPARE ALL ARCHITECTURAL, MECHANICAL, ELECTRICAL, PIPING AND STRUCTURAL DRAWINGS AND IN CASE OF ANY CONFLICTS OR DISCREPANCY, INFORM THE ENGINEER.
4. ALL MATERIALS ARE SELECTED FROM THE HIGHEST QUALITY AND MUST BE APPROVED BY THE CLIENT.
5. ALL OPENINGS FOR PIPING/CABLING AND HVAC OPENINGS SHALL BE CONSIDERED AS PER RELATED DRAWINGS BEFORE CONSTRUCTION.
6. ARCHITECTURAL DETAIL DESIGN WILL BE REVISED BASED ON APPROVED STRUCTURAL DRAWINGS.
7. ELEVATION CODE : LOCAL ±0.0m CORRESPONDS TO GLOBAL +11.10m

LEGEND

LEAN CONCRETE

REINFORCED CONCRETE

PRESSED BRICK

STONE

EXPANSION JOINT FILLER (PLASTOFOAM)

TERRAZZO TILES FOR ROOF – 30x30cm

BLOCKAGE

F.FL.	FINISHED FLOOR	B.O.P.	BOTTOM OF PIT
T.O.WA	TOP OF WAIKWAY	F.G.L.	FINISH GRADING LEVEL
T.O.P.	TOP OF PARAPET	T.O.T.	TOP OF TRENCH
T.O.FOU.	TOP OF FOUNDATION	C.O.S.	CENTER OF SLEEVE
M.D	METAL DOOR	B.O.S.	BOTTOM OF SLEEVE
T.O.R.	TOP OF ROOF	B.O.O.	BOTTOM OF OPENING
T.O.D.	TOP OF DOOR	B.O.T.	BOTTOM OF TRENCH
B.O.Ca.	BOTTOM OF CAGE	B.O.P.	BOTTOM OF PIT
T.O.Ca.	TOP OF CAGE	R.H.P.	ROOF HIGHEST POINT
B.O.G.	BOTTOM OF GUTTER	R.L.P.	ROOF LOWEST POINT
T.O.Ca.	TOP OF CAGE	N.G.R.	NEUTRAL GROUND RESISTOR
M.D.	METAL DOOR	B.P.D.	BLAST–PROOF DOOR
T.O.S.	TOP OF SLAB	F.D.	FENCE DOOR

REFERENCE DRAWING	DRG. No.
STANDARD DRAWING FOR ARCHITECTURAL DETAILS	BK-GNRAL-PEDCO-000-AR-DW-0001
SITE SEWARAGE SYSTEM LAYOUT & DETAILS	BK-GCS-PEDCO-120-CV-PY-0001
CABLE TRENCH AND DUCT BANK LAYOUT	BK-GCS-PEDCO-120-CV-PY-0002
ELECTRICAL CABLE ROUTE & SECTION LAYOUT FOR BUILDING & SHELTER	BK-GCS-PEDCO-120-EL-PY-0006
FOUNDATION DRAWING FOR EXTENSION OF EXISTING ELECT. BUILDING	BK-GCS-PEDCO-120-ST-DW-0063
STRUCTURAL DRAWING FOR EXTENSION OF EXISTING ELECT. BUILDING	BK-GCS-PEDCO-120-ST-DW-0064
STANDARD DETAILS FOR LADDER & SAFETY CAGE	BK-GNRAL-PEDCO-000-ST-DW-0009
ELECTRICAL EQUIPMENT ARRANGEMENT LAYOUT FOR BUILDING	BK-GCS-PEDCO-120-ST-EL-PY-0006
UNIT PLOT PLAN DRAWING	BK-GCS-PEDCO-120-PI-PY-0001

KEY PLAN

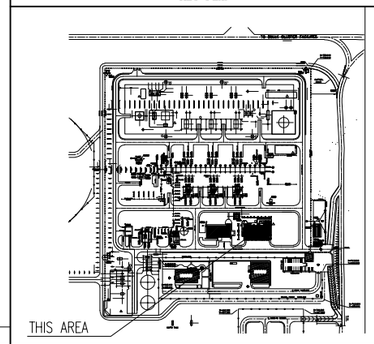

REV.	DATE	P.O.I.S	PREP.	CHK.	APP.	AUT.
D07	MAR.2024	AFC	R.BERLOUIE	M.FAKHARIAN	S.Paramarzpour	**.**
D06	NOV.2023	AFC	R.BERLOUIE	M.FAKHARIAN	S.Paramarzpour	**.**
D05	SEP.2023	AFC	R.BERLOUIE	M.FAKHARIAN	A.M.MOHSENI	**.**
D04	AUG.2023	IFA	R.BERLOUIE	M.FAKHARIAN	A.M.MOHSENI	**.**
D03	MAY.2023	IFA	R.BERLOUIE	M.FAKHARIAN	A.M.MOHSENI	**.**
D02	AUG.2022	IFA	R.BERLOUIE	M.FAKHARIAN	M.MEHRSHAD	**.**
D01	APR.2022	IFA	R.BERLOUIE	M.FAKHARIAN	M.MEHRSHAD	**.**
D00	JAN.2022	IFC	R.BERLOUIE	M.FAKHARIAN	M.MEHRSHAD	**.**

REV.	DESCRIPTION	BY	DATE	BY	DATE
***	**********	**.**	***.****	**.**	***.****
		CHECKED		REV. APPR.	

PROJECT NAME: BINAK OILFIELD DEVELOPMENT/SURFACE FACILITIES GAS COMPRESSOR STATION

PROJECT NO.: 971020

EPC CONTRACTOR: HIRGAN ENERGY – DESIGN & INSPECTION COMPANIES

EPD/EPC CONTRACTOR (GC): PETROIRAN DEVELOPMENT COMPANY — PEDCO

DRAWING TITLE: ARCHITECTURAL DETAIL DRAWING FOR EXTENSION OF EXISTING ELECT. BUILDING
EXISTING PLAN

SCALE	SIZE	DRAWING NO.	SHEET NO.	REV.
AS SHOWN	A1	BK-GCS-PEDCO-120-AR-DW-0002	01 OF 15	D07

اصل و کلیه نسخ این نقشه و حق اقتباس متعلق به شرکت ملی مناطق نفت خیز جنوب میباشد.

THE ORIGINAL AND ALL COPIES OF THIS DRAWING TOGETHER WITH THE COPYRIGHT THEREIN ARE THE SOLE PROPERTY OF N.I.S.O.C./ FIELDS

BINAK OILFIELD DEVELOPMENT
SURFACE FACILITIES
GAS COMPRESSOR STATION

DATE	SCALE	DRAWING BY	CHECKED BY	PROJECT ENG.

NO CONSTRUCTION PERMITTED UNLESS DRAWING APPROVED

APPROVED FOR CONSTRUCTION — BY: — DATE:

BUDGET REF.	LOCATION	SIZE	CLASS	SERIAL NO.	SHEET	REVISION
053-073-9184	F	4	B	709100	01 OF 15	D07

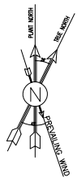

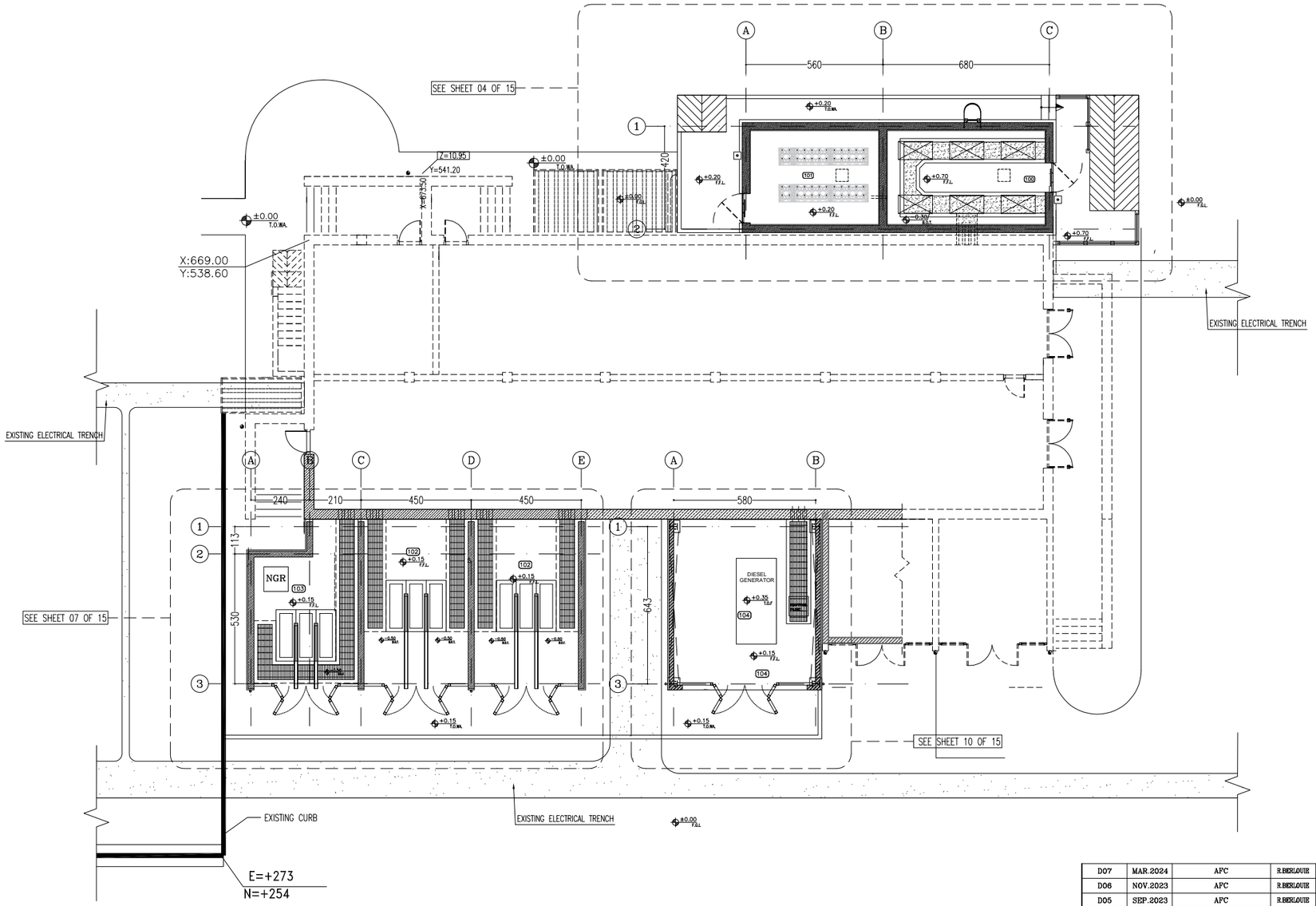

SPACE TAG NUMBER

- 100 CAPACITOR BANK
- 101 CO2 ROOM
- 102 TRANSFORMER ROOM
- 103 FIRE-FIGHTING PUMP TRANSFORMER ROOM
- 104 DIESEL ROOM

SC.1:100 — 2 — PLAN

NOTES

1. ALL DIMENSIONS ARE IN CENTIMETER & ALL ELEVATIONS ARE IN METER.
2. ALL DIMENSIONS AND ELEVATIONS SHALL BE CHECKED BY THE CONTRACTOR PRIOR TO CONSTRUCTION.
3. CONTRACTOR SHALL COMPARE ALL ARCHITECTURAL, MECHANICAL, ELECTRICAL, PIPING AND STRUCTURAL DRAWINGS AND IN CASE OF ANY CONFLICTS OR DISCREPANCY, INFORM THE ENGINEER.
4. ALL MATERIALS ARE SELECTED FROM THE HIGHEST QUALITY AND MUST BE APPROVED BY THE CLIENT.
5. ALL OPENINGS FOR PIPING/CABLING AND HVAC OPENINGS SHALL BE CONSIDERED AS PER RELATED DRAWINGS BEFORE CONSTRUCTION.
6. ARCHITECTURAL DETAIL DESIGN WILL BE REVISED BASED ON APPROVED STRUCTURAL DRAWINGS.
7. ELEVATION CODE : LOCAL ±0.0m CORRESPONDS TO GLOBAL +11.10m

LEGEND

- LEAN CONCRETE
- REINFORCED CONCRETE
- PRESSED BRICK
- STONE
- EXPANSION JOINT FILLER (PLASTOFOAM)
- TERRAZZO TILES FOR ROOF – 30x30cm
- BLOCKAGE

F.FL.	FINISHED FLOOR	B.O.P.	BOTTOM OF PIT
T.O.WA	TOP OF WAIKWAY	F.G.L.	FINISH GRADING LEVEL
T.O.P.	TOP OF PARAPET	T.O.T.	TOP OF TRENCH
T.O.FOU.	TOP OF FOUNDATION	C.O.S.	CENTER OF SLEEVE
M.D	METAL DOOR	B.O.S.	BOTTOM OF SLEEVE
T.O.R.	TOP OF ROOF	B.O.O.	BOTTOM OF OPENING
T.O.D.	TOP OF DOOR	B.O.T.	BOTTOM OF TRENCH
B.O.Ca.	BOTTOM OF CAGE	B.O.P.	BOTTOM OF PIT
T.O.Ca.	TOP OF CAGE	R.H.P.	ROOF HIGHEST POINT
B.O.G.	BOTTOM OF GUTTER	R.L.P.	ROOF LOWEST POINT
T.O.Ca.	TOP OF CAGE	N.G.R.	NEUTRAL GROUND RESISTOR
M.D.	METAL DOOR	B.P.D.	BLAST-PROOF DOOR
T.O.S.	TOP OF SLAB	F.D.	FENCE DOOR

REFERENCE DRAWING	DRG. No.
STANDARD DRAWING FOR ARCHITECTURAL DETAILS	BK-GNRAL-PEDCO-000-AR-DW-0001
SITE SEWARAGE SYSTEM LAYOUT & DETAILS	BK-GCS-PEDCO-120-CV-PY-0001
CABLE TRENCH AND DUCT BANK LAYOUT	BK-GCS-PEDCO-120-CV-PY-0002
ELECTRICAL CABLE ROUTE & SECTION LAYOUT FOR BUILDING & SHELTER	BK-GCS-PEDCO-120-EL-PY-0006
FOUNDATION DRAWING FOR EXTENSION OF EXISTING ELECT. BUILDING	BK-GCS-PEDCO-120-ST-DW-0063
STRUCTURAL DRAWING FOR EXTENSION OF EXISTING ELECT. BUILDING	BK-GCS-PEDCO-120-ST-DW-0064
STANDARD DETAILS FOR LADDER & SAFETY CAGE	BK-GNRAL-PEDCO-000-ST-DW-0009
ELECTRICAL EQUIPMENT ARRANGEMENT LAYOUT FOR BUILDING	BK-GCS-PEDCO-120-ST-EL-PY-0006
UNIT PLOT PLAN DRAWING	BK-GCS-PEDCO-120-PI-PY-0001

KEY PLAN

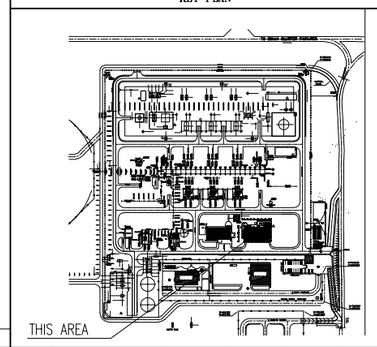

REV.	DATE	P.O.I.S	PREP.	CHK.	APP.	AUT.
D07	MAR.2024	AFC	R.BERLOUIE	M.FAKHARIAN	S.Paramarzpour	**.**
D06	NOV.2023	AFC	R.BERLOUIE	M.FAKHARIAN	S.Paramarzpour	**.**
D05	SEP.2023	AFC	R.BERLOUIE	M.FAKHARIAN	A.M.MOHSENI	**.**
D04	AUG.2023	IFA	R.BERLOUIE	M.FAKHARIAN	A.M.MOHSENI	**.**
D03	MAY.2023	IFA	R.BERLOUIE	M.FAKHARIAN	A.M.MOHSENI	**.**
D02	AUG.2022	IFA	R.BERLOUIE	M.FAKHARIAN	M.MEHRSHAD	**.**
D01	APR.2022	IFA	R.BERLOUIE	M.FAKHARIAN	M.MEHRSHAD	**.**
D00	JAN.2022	IFC	R.BERLOUIE	M.FAKHARIAN	M.MEHRSHAD	**.**

REV.	DESCRIPTION	CHECKED BY	CHECKED DATE	REV. APPR. BY	REV. APPR. DATE
***	**********	**.**	****.****	**.**	****.****

PROJECT NAME: BINAK OILFIELD DEVELOPMENT/SURFACE FACILITIES GAS COMPRESSOR STATION

PROJECT NO.: 971020

EPC CONTRACTOR: HIRGAN ENERGY – DESIGN & INSPECTION COMPANIES

EPD/EPC CONTRACTOR (GC): PEDCO — PETROIRAN DEVELOPMENT COMPANY

DRAWING TITLE: ARCHITECTURAL DETAIL DRAWING FOR EXTENSION OF EXISTING ELECT. BUILDING
PLANS

SCALE	SIZE	DRAWING NO.	SHEET NO.	REV.
AS SHOWN	A1	BK-GCS-PEDCO-120-AR-DW-0002	02 OF 15	D07

اصل و کلیه نسخ این نقشه و حق اقتباس متعلق به شرکت ملی مناطق نفت خیز جنوب میباشد.

THE ORIGINAL AND ALL COPIES OF THIS DRAWING TOGETHER WITH THE COPYRIGHT THEREIN ARE THE SOLE PROPERTY OF N.I.S.O.C./ FIELDS

BINAK OILFIELD DEVELOPMENT
SURFACE FACILITIES
GAS COMPRESSOR STATION

DATE	SCALE	DRAWING BY	CHECKED BY	PROJECT ENG.

NO CONSTRUCTION PERMITTED UNLESS DRAWING APPROVED

APPROVED FOR CONSTRUCTION BY: DATE:

BUDGET REF.	LOCATION	SIZE	CLASS	SERIAL NO.	SHEET	REVISION
053-073-9184	F	4	B	709100	02 OF 15	D07

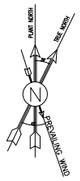

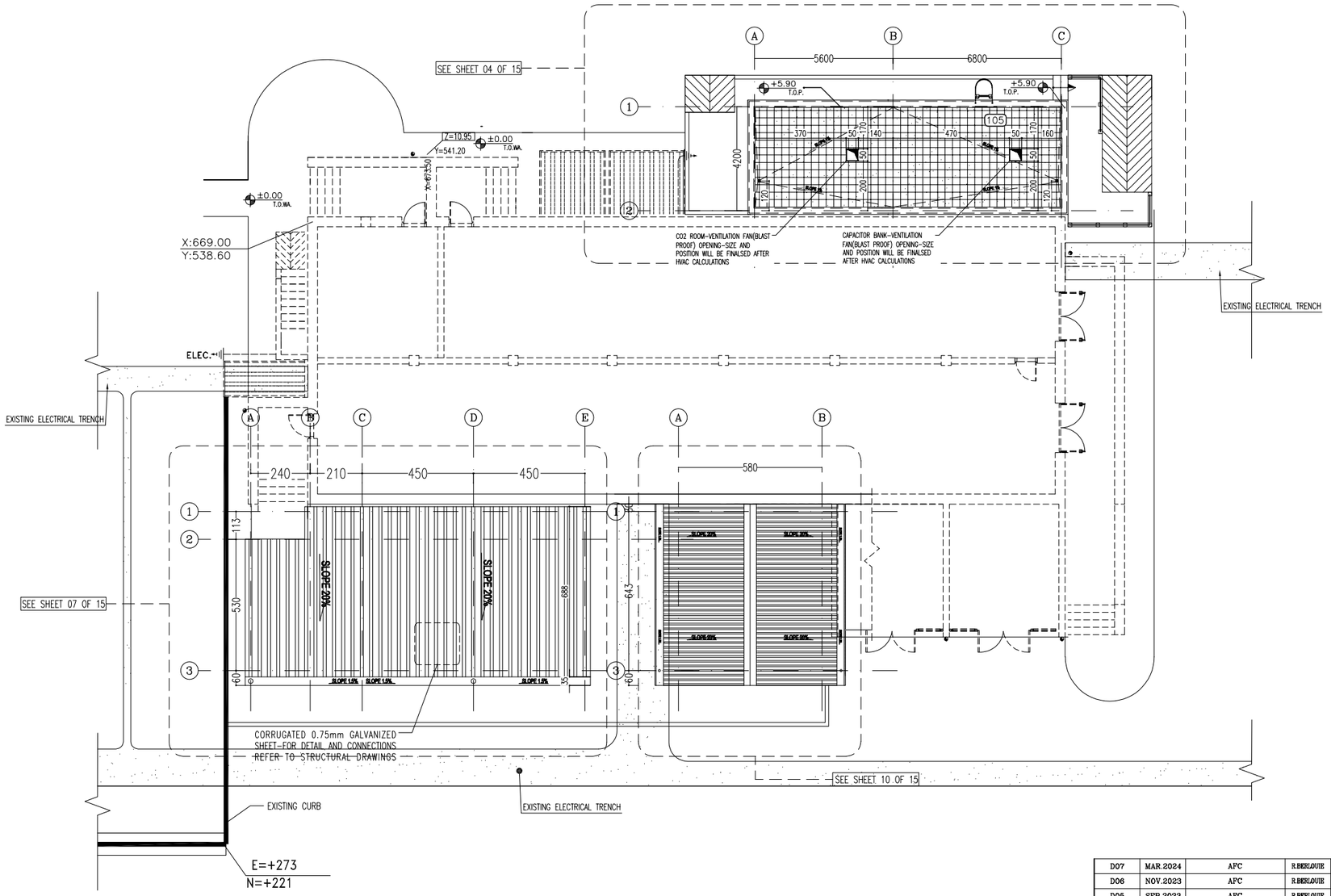

3 ROOF PLAN

SC.1:100

NOTES

1. ALL DIMENSIONS ARE IN CENTIMETER & ALL ELEVATIONS ARE IN METER.
2. ALL DIMENSIONS AND ELEVATIONS SHALL BE CHECKED BY THE CONTRACTOR PRIOR TO CONSTRUCTION.
3. CONTRACTOR SHALL COMPARE ALL ARCHITECTURAL, MECHANICAL, ELECTRICAL, PIPING AND STRUCTURAL DRAWINGS AND IN CASE OF ANY CONFLICTS OR DISCREPANCY, INFORM THE ENGINEER.
4. ALL MATERIALS ARE SELECTED FROM THE HIGHEST QUALITY AND MUST BE APPROVED BY THE CLIENT.
5. ALL OPENINGS FOR PIPING/CABLING AND HVAC OPENINGS SHALL BE CONSIDERED AS PER RELATED DRAWINGS BEFORE CONSTRUCTION.
6. ARCHITECTURAL DETAIL DESIGN WILL BE REVISED BASED ON APPROVED STRUCTURAL DRAWINGS.
7. ELEVATION CODE : LOCAL ±0.0m CORRESPONDS TO GLOBAL +11.10m

LEGEND

LEAN CONCRETE

REINFORCED CONCRETE

PRESSED BRICK

STONE

EXPANSION JOINT FILLER (PLASTOFOAM)

TERRAZZO TILES FOR ROOF – 30x30cm

BLOCKAGE

F.FL.	FINISHED FLOOR	B.O.P.	BOTTOM OF PIT
T.O.WA	TOP OF WAIKWAY	F.G.L.	FINISH GRADING LEVEL
T.O.P.	TOP OF PARAPET	T.O.T.	TOP OF TRENCH
T.O.FOU.	TOP OF FOUNDATION	C.O.S.	CENTER OF SLEEVE
M.D	METAL DOOR	B.O.S.	BOTTOM OF SLEEVE
T.O.R.	TOP OF ROOF	B.O.O.	BOTTOM OF OPENING
T.O.D.	TOP OF DOOR	B.O.T.	BOTTOM OF TRENCH
B.O.Ca.	BOTTOM OF CAGE	B.O.P.	BOTTOM OF PIT
T.O.Ca.	TOP OF CAGE	R.H.P.	ROOF HIGHEST POINT
B.O.G.	BOTTOM OF GUTTER	R.L.P.	ROOF LOWEST POINT
T.O.Ca.	TOP OF CAGE	N.G.R.	NEUTRAL GROUND RESISTOR
M.D.	METAL DOOR	B.P.D.	BLAST-PROOF DOOR
T.O.S.	TOP OF SLAB	F.D.	FENCE DOOR

REFERENCE DRAWING	DRG. No.
STANDARD DRAWING FOR ARCHITECTURAL DETAILS	BK-GNRAL-PEDCO-000-AR-DW-0001
SITE SEWARAGE SYSTEM LAYOUT & DETAILS	BK-GCS-PEDCO-120-CV-PY-0001
CABLE TRENCH AND DUCT BANK LAYOUT	BK-GCS-PEDCO-120-CV-PY-0002
ELECTRICAL CABLE ROUTE & SECTION LAYOUT FOR BUILDING & SHELTER	BK-GCS-PEDCO-120-EL-PY-0006
FOUNDATION DRAWING FOR EXTENSION OF EXISTING ELECT. BUILDING	BK-GCS-PEDCO-120-ST-DW-0063
STRUCTURAL DRAWING FOR EXTENSION OF EXISTING ELECT. BUILDING	BK-GCS-PEDCO-120-ST-DW-0064
STANDARD DETAILS FOR LADDER & SAFETY CAGE	BK-GNRAL-PEDCO-000-ST-DW-0009
ELECTRICAL EQUIPMENT ARRANGEMENT LAYOUT FOR BUILDING	BK-GCS-PEDCO-120-ST-EL-PY-0006
UNIT PLOT PLAN DRAWING	BK-GCS-PEDCO-120-PI-PY-0001

KEY PLAN

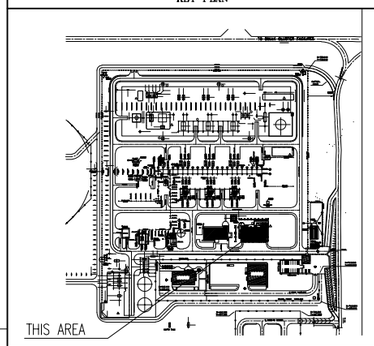

REV.	DATE	P.O.I.S	PREP.	CHK.	APP.	AUT.
D07	MAR.2024	AFC	R.BERLOUIE	M.FAKHARIAN	S.Paramasrpour	**.**
D06	NOV.2023	AFC	R.BERLOUIE	M.FAKHARIAN	S.Paramasrpour	**.**
D05	SEP.2023	AFC	R.BERLOUIE	M.FAKHARIAN	A.M.MOHSENI	**.**
D04	AUG.2023	IFA	R.BERLOUIE	M.FAKHARIAN	A.M.MOHSENI	**.**
D03	MAY.2023	IFA	R.BERLOUIE	M.FAKHARIAN	A.M.MOHSENI	**.**
D02	AUG.2022	IFA	R.BERLOUIE	M.FAKHARIAN	M.MEHRSHAD	**.**
D01	APR.2022	IFA	R.BERLOUIE	M.FAKHARIAN	M.MEHRSHAD	**.**
D00	JAN.2022	IFC	R.BERLOUIE	M.FAKHARIAN	M.MEHRSHAD	**.**

REV.	DESCRIPTION	CHECKED BY	CHECKED DATE	REV. APPR. BY	REV. APPR. DATE
***	**********	**.**	***.****	**.**	***.****

PROJECT NAME: BINAK OILFIELD DEVELOPMENT/SURFACE FACILITIES GAS COMPRESSOR STATION

PROJECT NO.: 971020

EPC CONTRACTOR: HIRGAN ENERGY – DESIGN & INSPECTION COMPANIES

EPD/EPC CONTRACTOR (GC): PETROIRAN DEVELOPMENT COMPANY (PEDCO)

DRAWING TITLE: ARCHITECTURAL DETAIL DRAWING FOR EXTENSION OF EXISTING ELECT. BUILDING
ROOF PLANS

SCALE	SIZE	DRAWING NO.	SHEET NO.	REV.
AS SHOWN	A1	BK-GCS-PEDCO-120-AR-DW-0002	03 OF 15	D07

اصل و کلیه نسخ این نقشه و حق اقتباس متعلق به شرکت ملی مناطق نفت خیز جنوب میباشد.

THE ORIGINAL AND ALL COPIES OF THIS DRAWING TOGETHER WITH THE COPYRIGHT THEREIN ARE THE SOLE PROPERTY OF N.I.S.O.C./ FIELDS

BINAK OILFIELD DEVELOPMENT
SURFACE FACILITIES
GAS COMPRESSOR STATION

DATE	SCALE	DRAWING BY	CHECKED BY	PROJECT ENG.

NO CONSTRUCTION PERMITTED UNLESS DRAWING APPROVED

APPROVED FOR CONSTRUCTION BY: DATE:

BUDGET REF.	LOCATION	SIZE	CLASS	SERIAL NO.	SHEET	REVISION
053-073-9184	F	4	B	709100	03 OF 15	D07

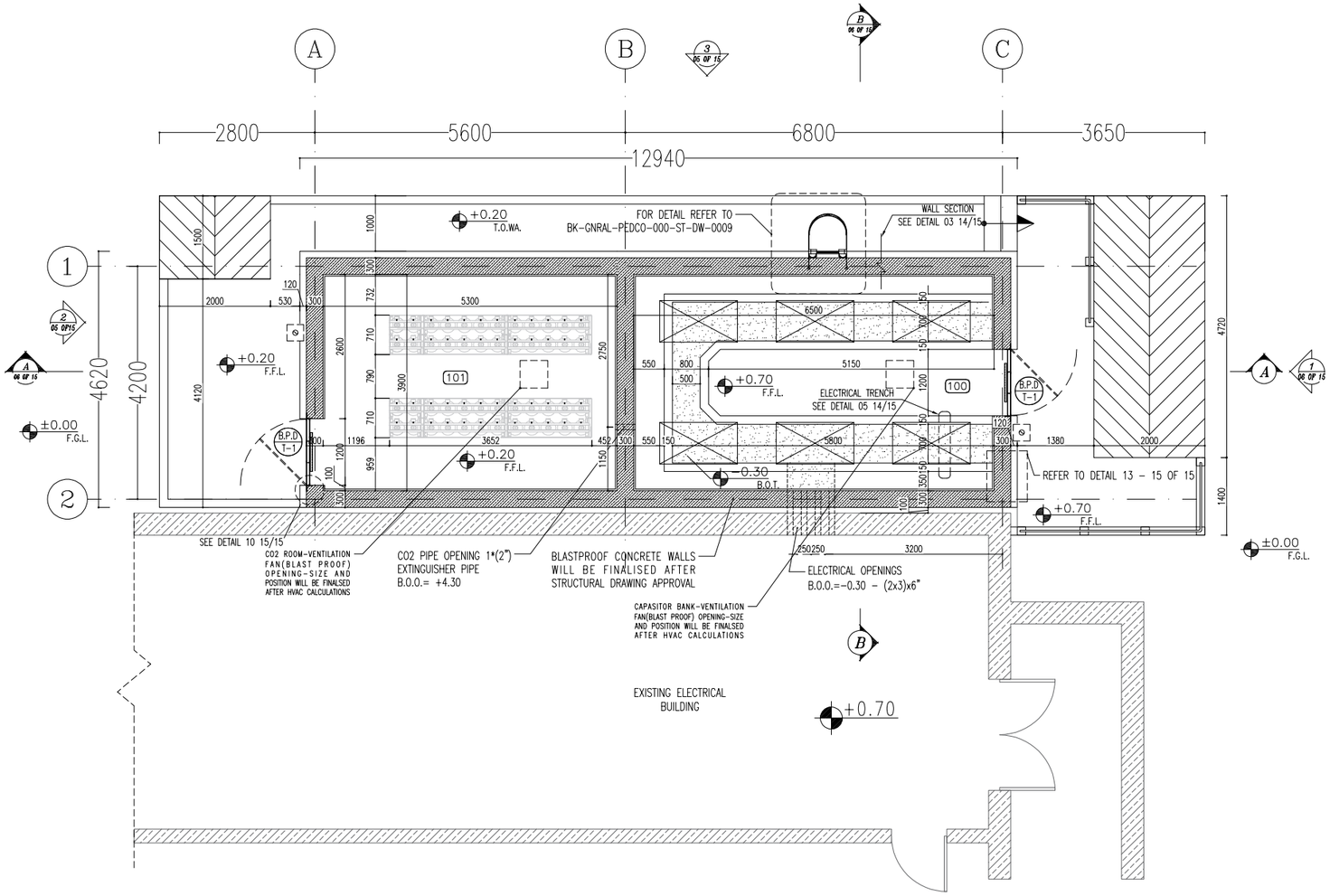

SC.1:50 4 CAPACITOR BANK AND CO2 ROOM PLAN

SPACE TAG	AREA
100	$32m^2$
101	$25m^2$
102	$32m^2 + 32m^2$
103	$29m^2$
104	$27m^2$
TOTAL	$174m^2$

SPACE TAG NUMBER

- 100 CAPACITOR BANK
- 101 CO2 ROOM
- 102 TRANSFORMER ROOM
- 103 FIRE-FIGHTING PUMP TRANSFORMER ROOM
- 104 DIESEL ROOM

NOTES

1. ALL DIMENSIONS ARE IN CENTIMETER & ALL ELEVATIONS ARE IN METER.
2. ALL DIMENSIONS AND ELEVATIONS SHALL BE CHECKED BY THE CONTRACTOR PRIOR TO CONSTRUCTION.
3. CONTRACTOR SHALL COMPARE ALL ARCHITECTURAL, MECHANICAL, ELECTRICAL, PIPING AND STRUCTURAL DRAWINGS AND IN CASE OF ANY CONFLICTS OR DISCREPANCY, INFORM THE ENGINEER.
4. ALL MATERIALS ARE SELECTED FROM THE HIGHEST QUALITY AND MUST BE APPROVED BY THE CLIENT.
5. ALL OPENINGS FOR PIPING/CABLING AND HVAC OPENINGS SHALL BE CONSIDERED AS PER RELATED DRAWINGS BEFORE CONSTRUCTION.
6. ARCHITECTURAL DETAIL DESIGN WILL BE REVISED BASED ON APPROVED STRUCTURAL DRAWINGS.
7. ELEVATION CODE : LOCAL ±0.0m CORRESPONDS TO GLOBAL +11.10m

LEGEND

LEAN CONCRETE
REINFORCED CONCRETE
PRESSED BRICK
STONE
EXPANSION JOINT FILLER (PLASTOFOAM)
TERRAZZO TILES FOR ROOF – 30x30cm
BLOCKAGE

F.FL.	FINISHED FLOOR	B.O.P.	BOTTOM OF PIT
T.O.WA	TOP OF WAIKWAY	F.G.L.	FINISH GRADING LEVEL
T.O.P.	TOP OF PARAPET	T.O.T.	TOP OF TRENCH
T.O.FOU.	TOP OF FOUNDATION	C.O.S.	CENTER OF SLEEVE
M.D	METAL DOOR	B.O.S.	BOTTOM OF SLEEVE
T.O.R.	TOP OF ROOF	B.O.O.	BOTTOM OF OPENING
T.O.D.	TOP OF DOOR	B.O.T.	BOTTOM OF TRENCH
B.O.Ca.	BOTTOM OF CAGE	B.O.P.	BOTTOM OF PIT
T.O.Ca.	TOP OF CAGE	R.H.P.	ROOF HIGHEST POINT
B.O.G.	BOTTOM OF GUTTER	R.L.P.	ROOF LOWEST POINT
T.O.Ca.	TOP OF CAGE	N.G.R.	NEUTRAL GROUND RESISTOR
M.D.	METAL DOOR	B.P.D.	BLAST-PROOF DOOR
T.O.S.	TOP OF SLAB	F.D.	FENCE DOOR

REFERENCE DRAWING	DRG. No.
STANDARD DRAWING FOR ARCHITECTURAL DETAILS	BK-GNRAL-PEDCO-000-AR-DW-0001
SITE SEWARAGE SYSTEM LAYOUT & DETAILS	BK-GCS-PEDCO-120-CV-PY-0001
CABLE TRENCH AND DUCT BANK LAYOUT	BK-GCS-PEDCO-120-CV-PY-0002
ELECTRICAL CABLE ROUTE & SECTION LAYOUT FOR BUILDING & SHELTER	BK-GCS-PEDCO-120-EL-PY-0006
FOUNDATION DRAWING FOR EXTENSION OF EXISTING ELECT. BUILDING	BK-GCS-PEDCO-120-ST-DW-0063
STRUCTURAL DRAWING FOR EXTENSION OF EXISTING ELECT. BUILDING	BK-GCS-PEDCO-120-ST-DW-0064
STANDARD DETAILS FOR LADDER & SAFETY CAGE	BK-GNRAL-PEDCO-000-ST-DW-0009
ELECTRICAL EQUIPMENT ARRANGEMENT LAYOUT FOR BUILDING	BK-GCS-PEDCO-120-ST-EL-PY-0006
UNIT PLOT PLAN DRAWING	BK-GCS-PEDCO-120-PI-PY-0001

KEY PLAN

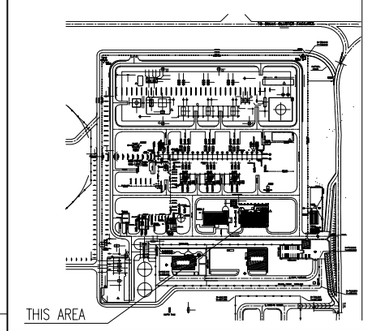

REV.	DATE	P.O.I.S	PREP.	CHK.	APP.	AUT.
D07	MAR.2024	AFC	R.BERLOUIE	M.FAKHARIAN	S.Paramarzpour	**.**
D06	NOV.2023	AFC	R.BERLOUIE	M.FAKHARIAN	S.Paramarzpour	**.**
D05	SEP.2023	AFC	R.BERLOUIE	M.FAKHARIAN	A.M.MOHSENI	**.**
D04	AUG.2023	IFA	R.BERLOUIE	M.FAKHARIAN	A.M.MOHSENI	**.**
D03	MAY.2023	IFA	R.BERLOUIE	M.FAKHARIAN	A.M.MOHSENI	**.**
D02	AUG.2022	IFA	R.BERLOUIE	M.FAKHARIAN	M.MEHRSHAD	**.**
D01	APR.2022	IFA	R.BERLOUIE	M.FAKHARIAN	M.MEHRSHAD	**.**
D00	JAN.2022	IFC	R.BERLOUIE	M.FAKHARIAN	M.MEHRSHAD	**.**

REV.	DESCRIPTION	BY	DATE	BY	DATE
***	**********	**.**	***.****	**.**	***.****
		CHECKED		REV. APPR.	

PROJECT NAME: BINAK OILFIELD DEVELOPMENT/SURFACE FACILITIES GAS COMPRESSOR STATION

PROJECT NO.: 971020

EPC CONTRACTOR: HIRGAN ENERGY – DESIGN & INSPECTION COMPANIES

EPD/EPC CONTRACTOR (GC): PEDCO — PETROIRAN DEVELOPMENT COMPANY

DRAWING TITLE: ARCHITECTURAL DETAIL DRAWING FOR EXTENSION OF EXISTING ELECT. BUILDING
PLAN

SCALE	SIZE	DRAWING NO.	SHEET NO.	REV.
AS SHOWN	A1	BK-GCS-PEDCO-120-AR-DW-0002	04 OF 15	D07

اصل و کلیه نسخ این نقشه و حق اقتباس متعلق به شرکت ملی مناطق نفت خیز جنوب میباشد.

THE ORIGINAL AND ALL COPIES OF THIS DRAWING TOGETHER WITH THE COPYRIGHT THEREIN ARE THE SOLE PROPERTY OF N.I.S.O.C./ FIELDS

BINAK OILFIELD DEVELOPMENT
SURFACE FACILITIES
GAS COMPRESSOR STATION

DATE	SCALE	DRAWING BY	CHECKED BY	PROJECT ENG.

NO CONSTRUCTION PERMITTED UNLESS DRAWING APPROVED

APPROVED FOR CONSTRUCTION BY: DATE:

BUDGET REF.	LOCATION	SIZE	CLASS	SERIAL NO.	SHEET	REVISION
053-073-9184	F	4	B	709100	04 OF 15	D07

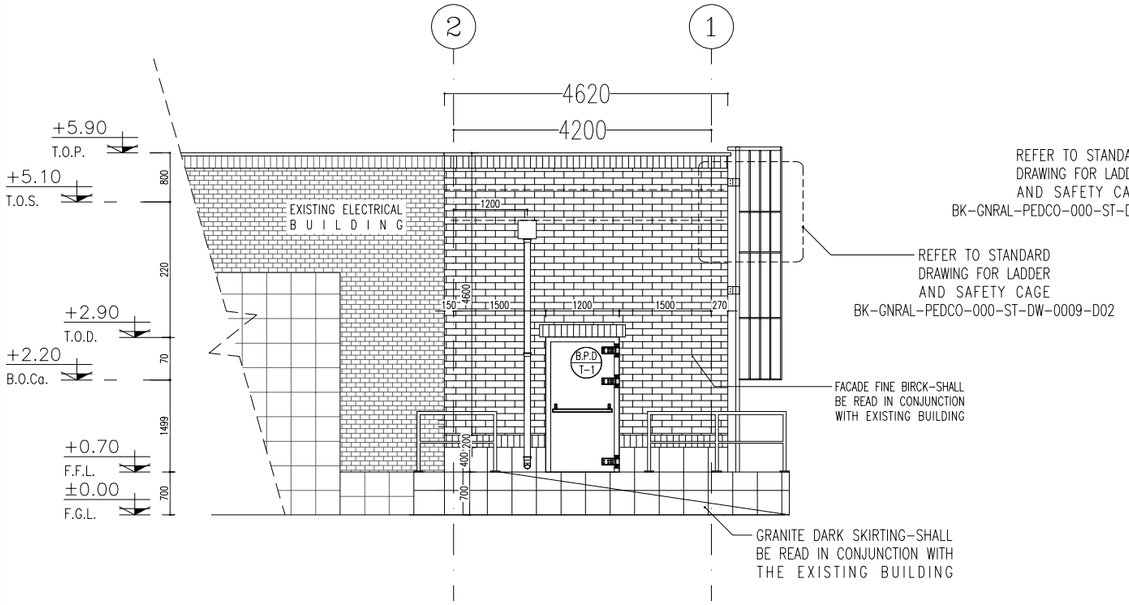

1 ELEVATION
SC.1:50 (04 OF 15)

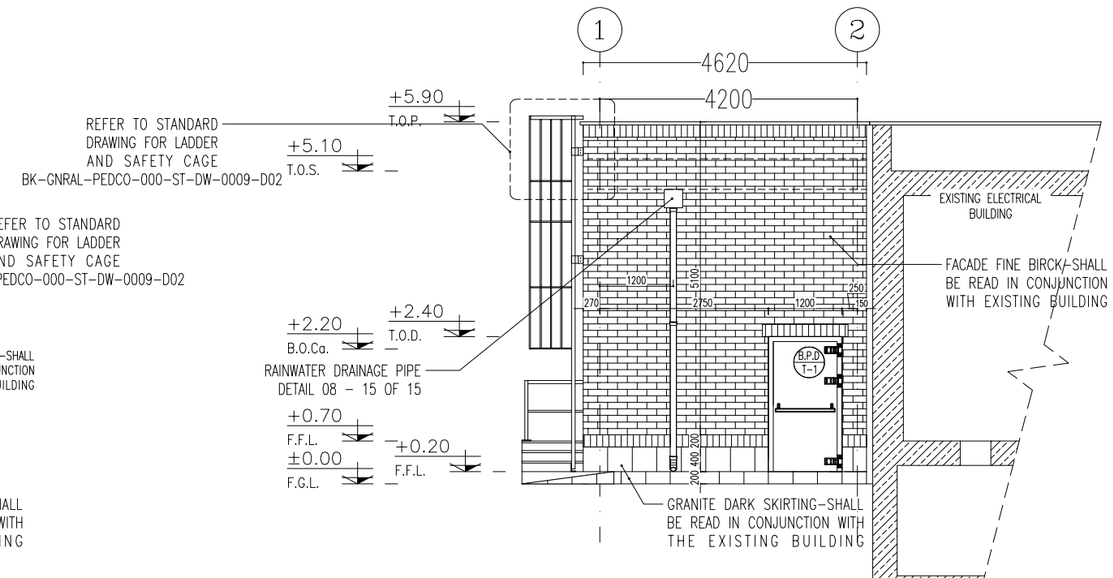

2 ELEVATION
SC.1:50 (04 OF 15)

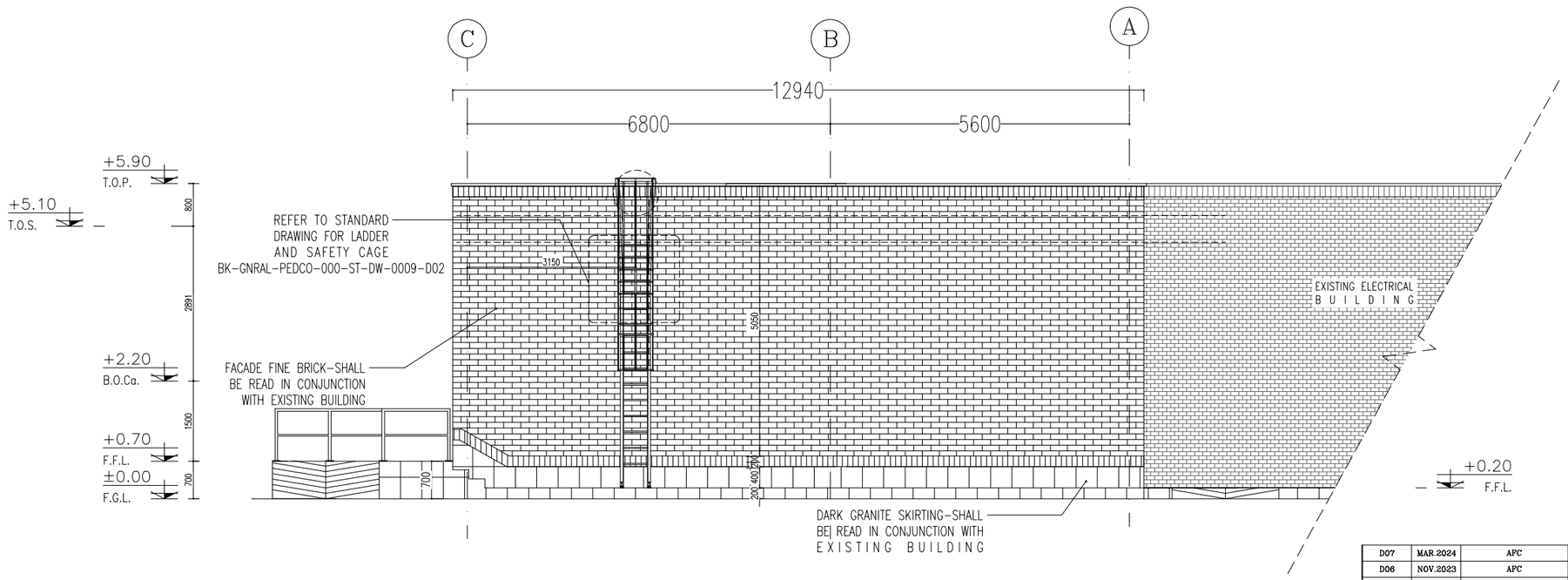

3 ELEVATION
SC.1:50 (04 OF 15)

NOTES

1. ALL DIMENSIONS ARE IN CENTIMETER & ALL ELEVATIONS ARE IN METER.
2. ALL DIMENSIONS AND ELEVATIONS SHALL BE CHECKED BY THE CONTRACTOR PRIOR TO CONSTRUCTION.
3. CONTRACTOR SHALL COMPARE ALL ARCHITECTURAL, MECHANICAL, ELECTRICAL, PIPING AND STRUCTURAL DRAWINGS AND IN CASE OF ANY CONFLICTS OR DISCREPANCY, INFORM THE ENGINEER.
4. ALL MATERIALS ARE SELECTED FROM THE HIGHEST QUALITY AND MUST BE APPROVED BY THE CLIENT.
5. ALL OPENINGS FOR PIPING/CABLING AND HVAC OPENINGS SHALL BE CONSIDERED AS PER RELATED DRAWINGS BEFORE CONSTRUCTION.
6. ARCHITECTURAL DETAIL DESIGN WILL BE REVISED BASED ON APPROVED STRUCTURAL DRAWINGS.
7. ELEVATION CODE : LOCAL ±0.0m CORRESPONDS TO GLOBAL +11.10m

LEGEND

LEAN CONCRETE
REINFORCED CONCRETE
PRESSED BRICK
STONE
EXPANSION JOINT FILLER (PLASTOFOAM)
TERRAZZO TILES FOR ROOF – 30x30cm
BLOCKAGE

F.FL.	FINISHED FLOOR	B.O.P.	BOTTOM OF PIT
T.O.WA	TOP OF WAIKWAY	F.G.L.	FINISH GRADING LEVEL
T.O.P.	TOP OF PARAPET	T.O.T.	TOP OF TRENCH
T.O.FOU.	TOP OF FOUNDATION	C.O.S.	CENTER OF SLEEVE
M.D	METAL DOOR	B.O.S.	BOTTOM OF SLEEVE
T.O.R.	TOP OF ROOF	B.O.O.	BOTTOM OF OPENING
T.O.D.	TOP OF DOOR	B.O.T.	BOTTOM OF TRENCH
B.O.Ca.	BOTTOM OF CAGE	B.O.P.	BOTTOM OF PIT
T.O.Ca.	TOP OF CAGE	R.H.P.	ROOF HIGHEST POINT
B.O.G.	BOTTOM OF GUTTER	R.L.P.	ROOF LOWEST POINT
T.O.Ca.	TOP OF CAGE	N.G.R.	NEUTRAL GROUND RESISTOR
M.D.	METAL DOOR	B.P.D.	BLAST-PROOF DOOR
T.O.S.	TOP OF SLAB	F.D.	FENCE DOOR

REFERENCE DRAWING	DRG. No.
STANDARD DRAWING FOR ARCHITECTURAL DETAILS	BK-GNRAL-PEDCO-000-AR-DW-0001
SITE SEWARAGE SYSTEM LAYOUT & DETAILS	BK-GCS-PEDCO-120-CV-PY-0001
CABLE TRENCH AND DUCT BANK LAYOUT	BK-GCS-PEDCO-120-CV-PY-0002
ELECTRICAL CABLE ROUTE & SECTION LAYOUT FOR BUILDING & SHELTER	BK-GCS-PEDCO-120-EL-PY-0006
FOUNDATION DRAWING FOR EXTENSION OF EXISTING ELECT. BUILDING	BK-GCS-PEDCO-120-ST-DW-0063
STRUCTURAL DRAWING FOR EXTENSION OF EXISTING ELECT. BUILDING	BK-GCS-PEDCO-120-ST-DW-0064
STANDARD DETAILS FOR LADDER & SAFETY CAGE	BK-GNRAL-PEDCO-000-ST-DW-0009
ELECTRICAL EQUIPMENT ARRANGEMENT LAYOUT FOR BUILDING	BK-GCS-PEDCO-120-ST-EL-PY-0008
UNIT PLOT PLAN DRAWING	BK-GCS-PEDCO-120-PI-PY-0001

KEY PLAN

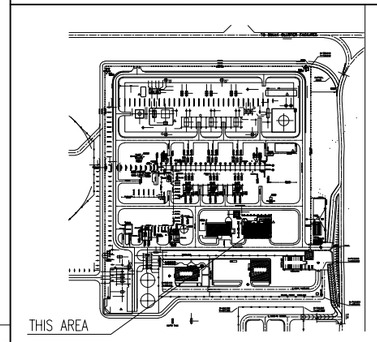

REV.	DATE	P.O.I.S	PREP.	CHK.	APP.	AUT.
D07	MAR.2024	AFC	R.BERLOUIE	M.FAKHARIAN	S.Paramarzpour	**.**
D06	NOV.2023	AFC	R.BERLOUIE	M.FAKHARIAN	S.Paramarzpour	**.**
D05	SEP.2023	AFC	R.BERLOUIE	M.FAKHARIAN	A.M.MOHSENI	**.**
D04	AUG.2023	IFA	R.BERLOUIE	M.FAKHARIAN	A.M.MOHSENI	**.**
D03	MAY.2023	IFA	R.BERLOUIE	M.FAKHARIAN	A.M.MOHSENI	**.**
D02	AUG.2022	IFA	R.BERLOUIE	M.FAKHARIAN	M.MEHRSHAD	**.**
D01	APR.2022	IFA	R.BERLOUIE	M.FAKHARIAN	M.MEHRSHAD	**.**
D00	JAN.2022	IFC	R.BERLOUIE	M.FAKHARIAN	M.MEHRSHAD	**.**

REV.	DESCRIPTION	BY	DATE	BY	DATE
***	**********	**.**	***.****	**.**	***.****
		CHECKED		REV. APPR.	

اصل و کلیه نسخ این نقشه و حق اقتباس متعلق به شرکت ملی مناطق نفت خیز جنوب میباشد.

THE ORIGINAL AND ALL COPIES OF THIS DRAWING TOGETHER WITH THE COPYRIGHT THEREIN ARE THE SOLE PROPERTY OF N.I.S.O.C./ FIELDS

PROJECT NAME: BINAK OILFIELD DEVELOPMENT/SURFACE FACILITIES GAS COMPRESSOR STATION

PROJECT NO.: 971020

EPC CONTRACTOR: HIRGAN ENERGY – DESIGN & INSPECTION COMPANIES

EPD/EPC CONTRACTOR (GC): PETROIRAN DEVELOPMENT COMPANY (PEDCO)

BINAK OILFIELD DEVELOPMENT
SURFACE FACILITIES
GAS COMPRESSOR STATION

DATE	SCALE	DRAWING BY	CHECKED BY	PROJECT ENG.

DRAWING TITLE: ARCHITECTURAL DETAIL DRAWING FOR EXTENSION OF EXISTING ELECT. BUILDING
ELEVATIONS

NO CONSTRUCTION PERMITTED UNLESS DRAWING APPROVED

APPROVED FOR CONSTRUCTION | BY: | DATE:

SCALE	SIZE	DRAWING NO.	SHEET NO.	REV.	BUDGET REF.	LOCATION	SIZE	CLASS	SERIAL NO.	SHEET	REVISION
AS SHOWN	A1	BK-GCS-PEDCO-120-AR-DW-0002	05 OF 15	D07	053-073-9184	F	4	B	709100	05 OF 15	D07

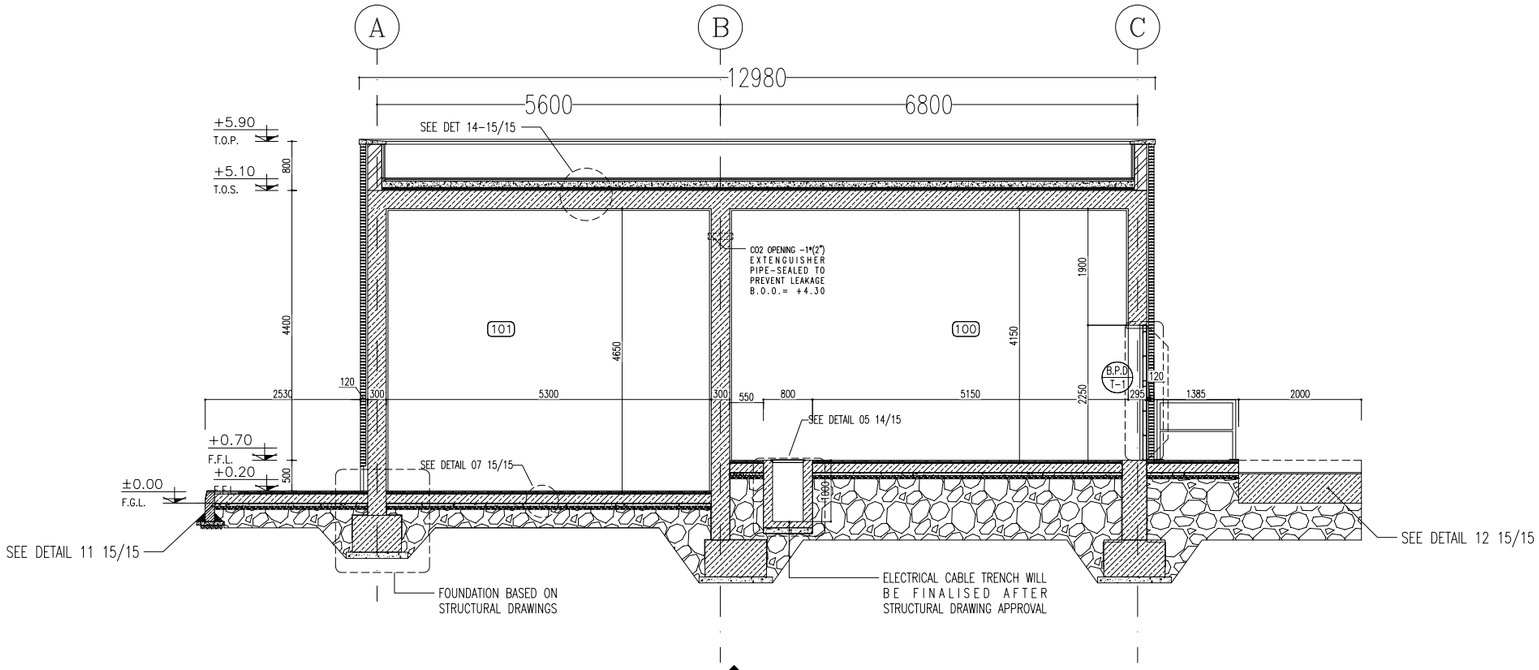

A SECTION
SC.1:50 04 OF 115

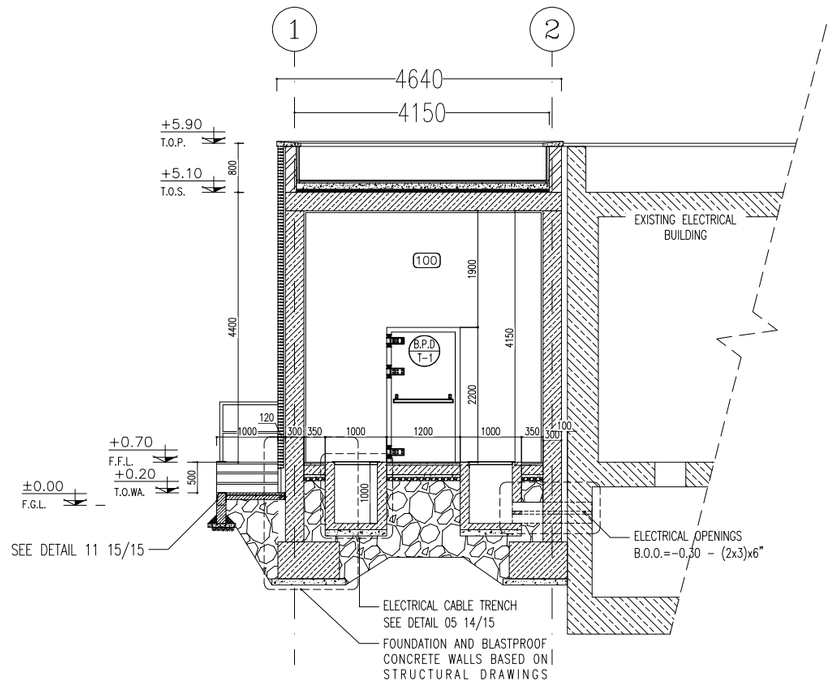

B SECTION
SC.1:50 04 OF 15

SPACE TAG NUMBER

- 100 CAPACITOR BANK
- 101 CO2 ROOM
- 102 TRANSFORMER ROOM
- 103 FIRE-FIGHTING PUMP TRANSFORMER ROOM
- 104 DIESEL ROOM

NOTES

1. ALL DIMENSIONS ARE IN CENTIMETER & ALL ELEVATIONS ARE IN METER.
2. ALL DIMENSIONS AND ELEVATIONS SHALL BE CHECKED BY THE CONTRACTOR PRIOR TO CONSTRUCTION.
3. CONTRACTOR SHALL COMPARE ALL ARCHITECTURAL, MECHANICAL, ELECTRICAL, PIPING AND STRUCTURAL DRAWINGS AND IN CASE OF ANY CONFLICTS OR DISCREPANCY, INFORM THE ENGINEER.
4. ALL MATERIALS ARE SELECTED FROM THE HIGHEST QUALITY AND MUST BE APPROVED BY THE CLIENT.
5. ALL OPENINGS FOR PIPING/CABLING AND HVAC OPENINGS SHALL BE CONSIDERED AS PER RELATED DRAWINGS BEFORE CONSTRUCTION.
6. ARCHITECTURAL DETAIL DESIGN WILL BE REVISED BASED ON APPROVED STRUCTURAL DRAWINGS.
7. ELEVATION CODE : LOCAL ±0.0m CORRESPONDS TO GLOBAL +11.10m

LEGEND

LEAN CONCRETE
REINFORCED CONCRETE
PRESSED BRICK
STONE
EXPANSION JOINT FILLER (PLASTOFOAM)
TERRAZZO TILES FOR ROOF – 30x30cm
BLOCKAGE

F.FL.	FINISHED FLOOR	B.O.P.	BOTTOM OF PIT
T.O.WA	TOP OF WAIKWAY	F.G.L.	FINISH GRADING LEVEL
T.O.P.	TOP OF PARAPET	T.O.T.	TOP OF TRENCH
T.O.FOU.	TOP OF FOUNDATION	C.O.S.	CENTER OF SLEEVE
M.D	METAL DOOR	B.O.S.	BOTTOM OF SLEEVE
T.O.R.	TOP OF ROOF	B.O.O.	BOTTOM OF OPENING
T.O.D.	TOP OF DOOR	B.O.T.	BOTTOM OF TRENCH
B.O.Ca.	BOTTOM OF CAGE	B.O.P.	BOTTOM OF PIT
T.O.Ca.	TOP OF CAGE	R.H.P.	ROOF HIGHEST POINT
B.O.G.	BOTTOM OF GUTTER	R.L.P.	ROOF LOWEST POINT
T.O.Ca.	TOP OF CAGE	N.G.R.	NEUTRAL GROUND RESISTOR
M.D.	METAL DOOR	B.P.D.	BLAST-PROOF DOOR
T.O.S.	TOP OF SLAB	F.D.	FENCE DOOR

REFERENCE DRAWING	DRG. No.
STANDARD DRAWING FOR ARCHITECTURAL DETAILS	BK-GNRAL-PEDCO-000-AR-DW-0001
SITE SEWARAGE SYSTEM LAYOUT & DETAILS	BK-GCS-PEDCO-120-CV-PY-0001
CABLE TRENCH AND DUCT BANK LAYOUT	BK-GCS-PEDCO-120-CV-PY-0002
ELECTRICAL CABLE ROUTE & SECTION LAYOUT FOR BUILDING & SHELTER	BK-GCS-PEDCO-120-EL-PY-0006
FOUNDATION DRAWING FOR EXTENSION OF EXISTING ELECT. BUILDING	BK-GCS-PEDCO-120-ST-DW-0063
STRUCTURAL DRAWING FOR EXTENSION OF EXISTING ELECT. BUILDING	BK-GCS-PEDCO-120-ST-DW-0064
STANDARD DETAILS FOR LADDER & SAFETY CAGE	BK-GNRAL-PEDCO-000-ST-DW-0009
ELECTRICAL EQUIPMENT ARRANGEMENT LAYOUT FOR BUILDING	BK-GCS-PEDCO-120-ST-EL-PY-0006
UNIT PLOT PLAN DRAWING	BK-GCS-PEDCO-120-PI-PY-0001

KEY PLAN

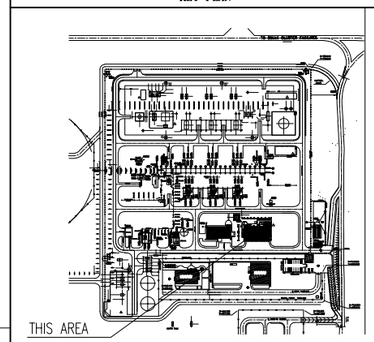

REV.	DATE	P.O.I.S	PREP.	CHK.	APP.	AUT.
D07	MAR.2024	AFC	R.BERLOUIE	M.FAKHARIAN	S.Paramarzpour	**.**
D06	NOV.2023	AFC	R.BERLOUIE	M.FAKHARIAN	S.Paramarzpour	**.**
D05	SEP.2023	AFC	R.BERLOUIE	M.FAKHARIAN	A.M.MOHSENI	**.**
D04	AUG.2023	IFA	R.BERLOUIE	M.FAKHARIAN	A.M.MOHSENI	**.**
D03	MAY.2023	IFA	R.BERLOUIE	M.FAKHARIAN	A.M.MOHSENI	**.**
D02	AUG.2022	IFA	R.BERLOUIE	M.FAKHARIAN	M.MEHRSHAD	**.**
D01	APR.2022	IFA	R.BERLOUIE	M.FAKHARIAN	M.MEHRSHAD	**.**
D00	JAN.2022	IFC	R.BERLOUIE	M.FAKHARIAN	M.MEHRSHAD	**.**

REV.	DESCRIPTION	BY	DATE	BY	DATE
		CHECKED		REV. APPR.	
***	**********	**.**	***.****	**.**	***.****

PROJECT NAME: BINAK OILFIELD DEVELOPMENT/SURFACE FACILITIES GAS COMPRESSOR STATION

PROJECT NO.: 971020

EPC CONTRACTOR: HIRGAN ENERGY – DESIGN & INSPECTION COMPANIES

EPD/EPC CONTRACTOR (GC): PEDCO — PETROIRAN DEVELOPMENT COMPANY

DRAWING TITLE: ARCHITECTURAL DETAIL DRAWING FOR EXTENSION OF EXISTING ELECT. BUILDING
SECTIONS

SCALE	SIZE	DRAWING NO.	SHEET NO.	REV.
AS SHOWN	A1	BK-GCS-PEDCO-120-AR-DW-0002	06 OF 15	D07

اصل و کلیه نسخ این نقشه و حق اقتباس متعلق به شرکت ملی مناطق نفت خیز جنوب میباشد.

THE ORIGINAL AND ALL COPIES OF THIS DRAWING TOGETHER WITH THE COPYRIGHT THEREIN ARE THE SOLE PROPERTY OF N.I.S.O.C./ FIELDS

BINAK OILFIELD DEVELOPMENT
SURFACE FACILITIES
GAS COMPRESSOR STATION

DATE	SCALE	DRAWING BY	CHECKED BY	PROJECT ENG.

NO CONSTRUCTION PERMITTED UNLESS DRAWING APPROVED

APPROVED FOR CONSTRUCTION BY: DATE:

BUDGET REF.	LOCATION	SIZE	CLASS	SERIAL NO.	SHEET	REVISION
053-073-9184	F	4	B	709100	06 OF 15	D07

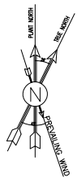

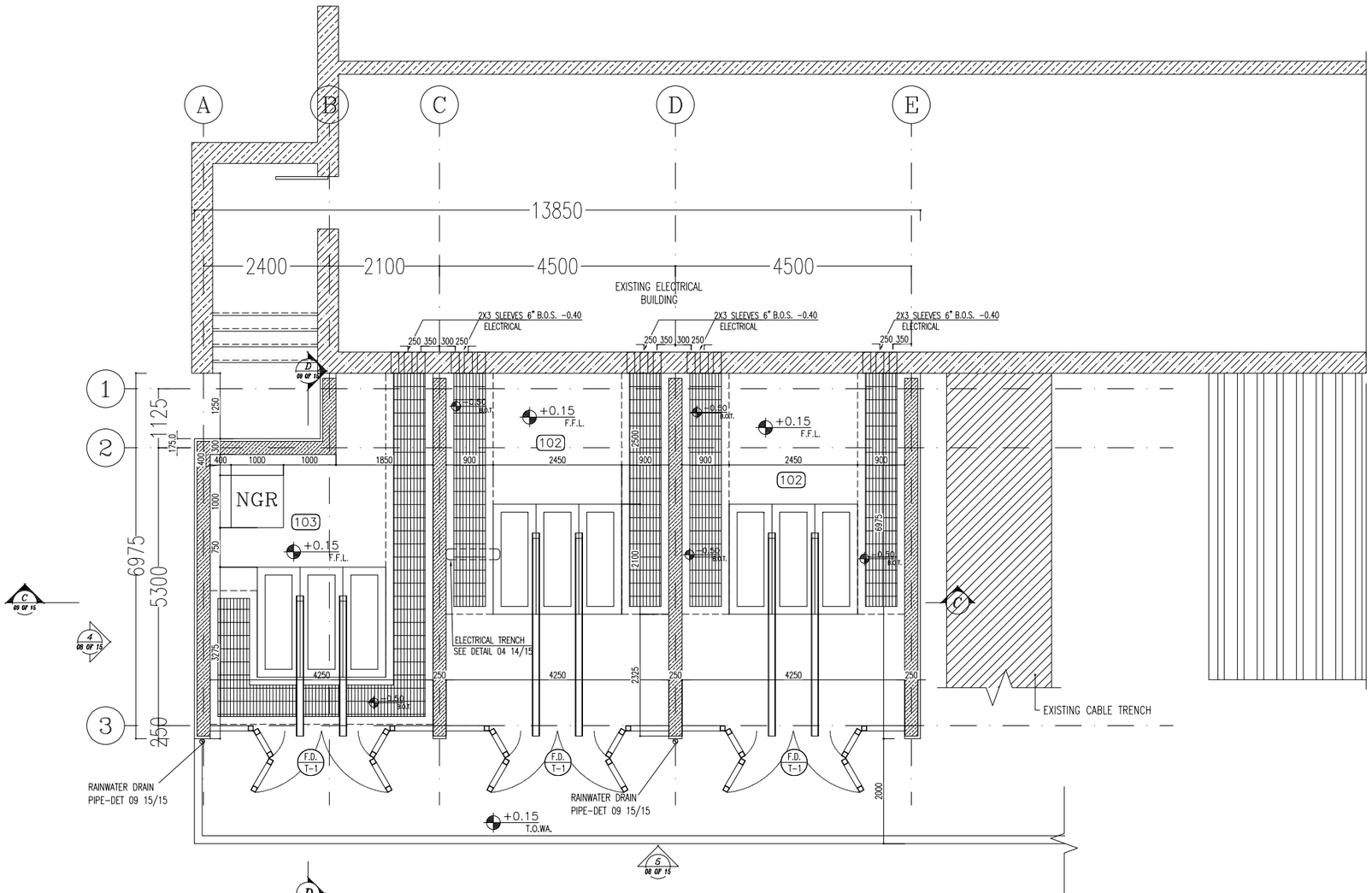

SC.1:50 5 TRANSFORMERS ROOMS PLAN

SPACE TAG NUMBER

- (100) CAPACITOR BANK
- (101) CO2 ROOM
- (102) TRANSFORMER ROOM
- (103) FIRE-FIGHTING PUMP TRANSFORMER ROOM
- (104) DIESEL ROOM

NOTES

1. ALL DIMENSIONS ARE IN CENTIMETER & ALL ELEVATIONS ARE IN METER.
2. ALL DIMENSIONS AND ELEVATIONS SHALL BE CHECKED BY THE CONTRACTOR PRIOR TO CONSTRUCTION.
3. CONTRACTOR SHALL COMPARE ALL ARCHITECTURAL, MECHANICAL, ELECTRICAL, PIPING AND STRUCTURAL DRAWINGS AND IN CASE OF ANY CONFLICTS OR DISCREPANCY, INFORM THE ENGINEER.
4. ALL MATERIALS ARE SELECTED FROM THE HIGHEST QUALITY AND MUST BE APPROVED BY THE CLIENT.
5. ALL OPENINGS FOR PIPING/CABLING AND HVAC OPENINGS SHALL BE CONSIDERED AS PER RELATED DRAWINGS BEFORE CONSTRUCTION.
6. ARCHITECTURAL DETAIL DESIGN WILL BE REVISED BASED ON APPROVED STRUCTURAL DRAWINGS.
7. ELEVATION CODE : LOCAL ±0.0m CORRESPONDS TO GLOBAL +11.10m

LEGEND

LEAN CONCRETE
REINFORCED CONCRETE
PRESSED BRICK
STONE
EXPANSION JOINT FILLER (PLASTOFOAM)
TERRAZZO TILES FOR ROOF – 30x30cm
BLOCKAGE

F.FL.	FINISHED FLOOR	B.O.P.	BOTTOM OF PIT
T.O.WA	TOP OF WAIKWAY	F.G.L.	FINISH GRADING LEVEL
T.O.P.	TOP OF PARAPET	T.O.T.	TOP OF TRENCH
T.O.FOU.	TOP OF FOUNDATION	C.O.S.	CENTER OF SLEEVE
M.D	METAL DOOR	B.O.S.	BOTTOM OF SLEEVE
T.O.R.	TOP OF ROOF	B.O.O.	BOTTOM OF OPENING
T.O.D.	TOP OF DOOR	B.O.T.	BOTTOM OF TRENCH
B.O.Ca.	BOTTOM OF CAGE	B.O.P.	BOTTOM OF PIT
T.O.Ca.	TOP OF CAGE	R.H.P.	ROOF HIGHEST POINT
B.O.G.	BOTTOM OF GUTTER	R.L.P.	ROOF LOWEST POINT
T.O.Ca.	TOP OF CAGE	N.G.R.	NEUTRAL GROUND RESISTOR
M.D.	METAL DOOR	B.P.D.	BLAST-PROOF DOOR
T.O.S.	TOP OF SLAB	F.D.	FENCE DOOR

REFERENCE DRAWING	DRG. No.
STANDARD DRAWING FOR ARCHITECTURAL DETAILS	BK-GNRAL-PEDCO-000-AR-DW-0001
SITE SEWARAGE SYSTEM LAYOUT & DETAILS	BK-GCS-PEDCO-120-CV-PY-0001
CABLE TRENCH AND DUCT BANK LAYOUT	BK-GCS-PEDCO-120-CV-PY-0002
ELECTRICAL CABLE ROUTE & SECTION LAYOUT FOR BUILDING & SHELTER	BK-GCS-PEDCO-120-EL-PY-0006
FOUNDATION DRAWING FOR EXTENSION OF EXISTING ELECT. BUILDING	BK-GCS-PEDCO-120-ST-DW-0063
STRUCTURAL DRAWING FOR EXTENSION OF EXISTING ELECT. BUILDING	BK-GCS-PEDCO-120-ST-DW-0064
STANDARD DETAILS FOR LADDER & SAFETY CAGE	BK-GNRAL-PEDCO-000-ST-DW-0009
ELECTRICAL EQUIPMENT ARRANGEMENT LAYOUT FOR BUILDING	BK-GCS-PEDCO-120-ST-EL-PY-0008
UNIT PLOT PLAN DRAWING	BK-GCS-PEDCO-120-PI-PY-0001

KEY PLAN

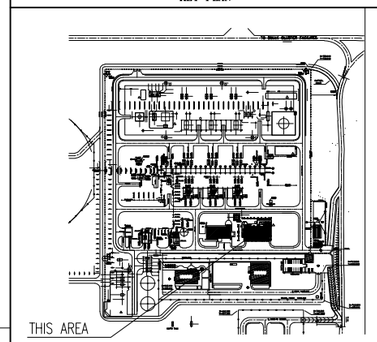

REV.	DATE	P.O.I.S	PREP.	CHK.	APP.	AUT.
D07	MAR.2024	AFC	R.BERLOUIE	M.FAKHARIAN	S.Paramarzpour	**.**
D06	NOV.2023	AFC	R.BERLOUIE	M.FAKHARIAN	S.Paramarzpour	**.**
D05	SEP.2023	AFC	R.BERLOUIE	M.FAKHARIAN	A.M.MOHSENI	**.**
D04	AUG.2023	IFA	R.BERLOUIE	M.FAKHARIAN	A.M.MOHSENI	**.**
D03	MAY.2023	IFA	R.BERLOUIE	M.FAKHARIAN	A.M.MOHSENI	**.**
D02	AUG.2022	IFA	R.BERLOUIE	M.FAKHARIAN	M.MEHRSHAD	**.**
D01	APR.2022	IFA	R.BERLOUIE	M.FAKHARIAN	M.MEHRSHAD	**.**
D00	JAN.2022	IFC	R.BERLOUIE	M.FAKHARIAN	M.MEHRSHAD	**.**

REV.	DESCRIPTION	CHECKED BY	CHECKED DATE	REV. APPR. BY	REV. APPR. DATE
***	**********	**.**	***.****	**.**	***.****

PROJECT NAME: BINAK OILFIELD DEVELOPMENT/SURFACE FACILITIES GAS COMPRESSOR STATION

PROJECT NO.: 971020

EPC CONTRACTOR: HIRGAN ENERGY – DESIGN & INSPECTION COMPANIES

EPD/EPC CONTRACTOR (GC): PETROIRAN DEVELOPMENT COMPANY (PEDCO)

DRAWING TITLE: ARCHITECTURAL DETAIL DRAWING FOR EXTENSION OF EXISTING ELECT. BUILDING PLAN

SCALE	SIZE	DRAWING NO.	SHEET NO.	REV.
AS SHOWN	A1	BK-GCS-PEDCO-120-AR-DW-0002	07 OF 15	D07

اصل و کلیه نسخ این نقشه و حق اقتباس متعلق به شرکت ملی مناطق نفت خیز جنوب میباشد.

THE ORIGINAL AND ALL COPIES OF THIS DRAWING TOGETHER WITH THE COPYRIGHT THEREIN ARE THE SOLE PROPERTY OF N.I.S.O.C./ FIELDS

BINAK OILFIELD DEVELOPMENT
SURFACE FACILITIES
GAS COMPRESSOR STATION

DATE	SCALE	DRAWING BY	CHECKED BY	PROJECT ENG.

NO CONSTRUCTION PERMITTED UNLESS DRAWING APPROVED

APPROVED FOR CONSTRUCTION BY: DATE:

BUDGET REF.	LOCATION	SIZE	CLASS	SERIAL NO.	SHEET	REVISION
053-073-9184	F	4	B	709100	07 OF 15	D07

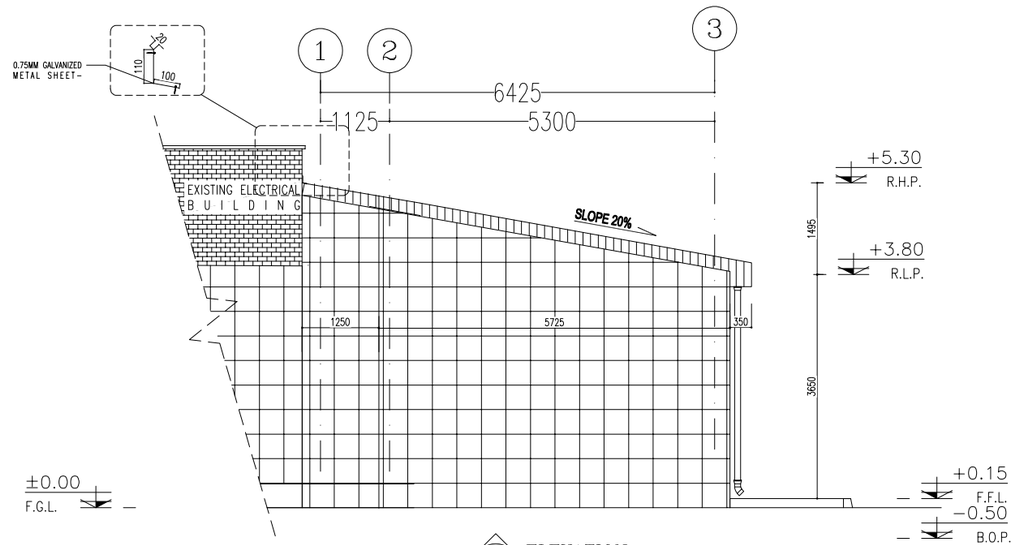

4 ELEVATION
SC.1:50 (07 OF 15)

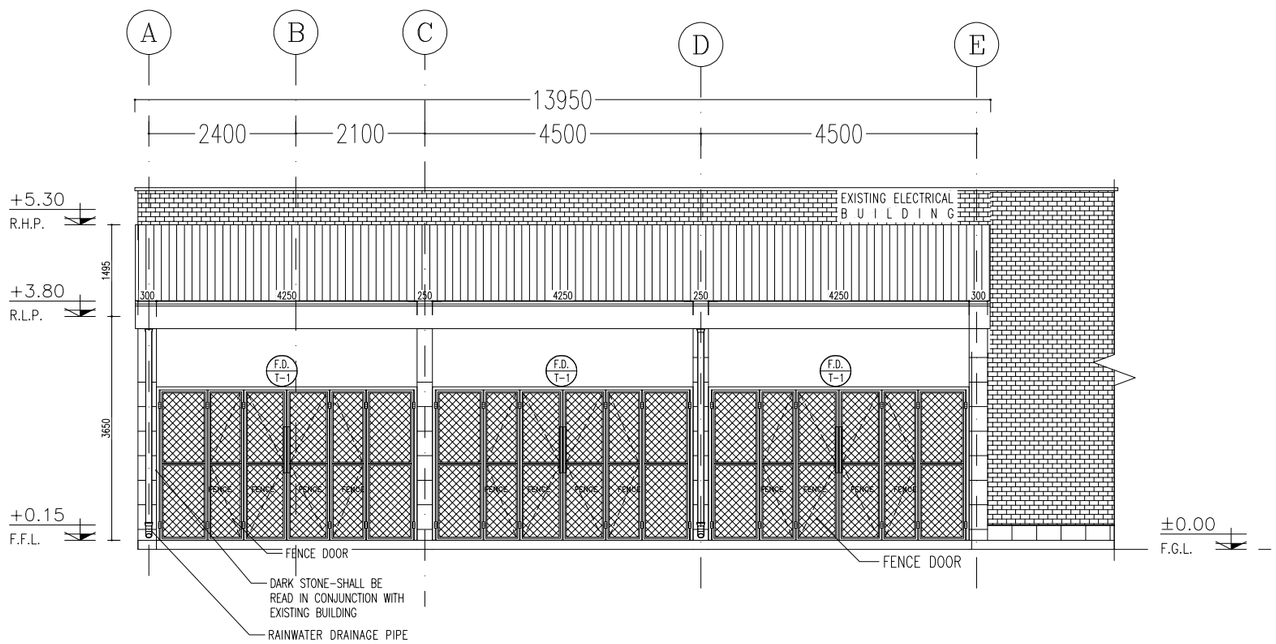

5 ELEVATION
SC.1:50 (07 OF 15)

SPACE TAG NUMBER

- 100 CAPACITOR BANK
- 101 CO2 ROOM
- 102 TRANSFORMER ROOM
- 103 FIRE-FIGHTING PUMP TRANSFORMER ROOM
- 104 DIESEL ROOM

NOTES

1. ALL DIMENSIONS ARE IN CENTIMETER & ALL ELEVATIONS ARE IN METER.
2. ALL DIMENSIONS AND ELEVATIONS SHALL BE CHECKED BY THE CONTRACTOR PRIOR TO CONSTRUCTION.
3. CONTRACTOR SHALL COMPARE ALL ARCHITECTURAL, MECHANICAL, ELECTRICAL, PIPING AND STRUCTURAL DRAWINGS AND IN CASE OF ANY CONFLICTS OR DISCREPANCY, INFORM THE ENGINEER.
4. ALL MATERIALS ARE SELECTED FROM THE HIGHEST QUALITY AND MUST BE APPROVED BY THE CLIENT.
5. ALL OPENINGS FOR PIPING/CABLING AND HVAC OPENINGS SHALL BE CONSIDERED AS PER RELATED DRAWINGS BEFORE CONSTRUCTION.
6. ARCHITECTURAL DETAIL DESIGN WILL BE REVISED BASED ON APPROVED STRUCTURAL DRAWINGS.
7. ELEVATION CODE : LOCAL ±0.0m CORRESPONDS TO GLOBAL +11.10m

LEGEND

- LEAN CONCRETE
- REINFORCED CONCRETE
- PRESSED BRICK
- STONE
- EXPANSION JOINT FILLER (PLASTOFOAM)
- TERRAZZO TILES FOR ROOF – 30x30cm
- BLOCKAGE

F.FL.	FINISHED FLOOR	B.O.P.	BOTTOM OF PIT
T.O.WA	TOP OF WAIKWAY	F.G.L.	FINISH GRADING LEVEL
T.O.P.	TOP OF PARAPET	T.O.T.	TOP OF TRENCH
T.O.FOU.	TOP OF FOUNDATION	C.O.S.	CENTER OF SLEEVE
M.D	METAL DOOR	B.O.S.	BOTTOM OF SLEEVE
T.O.R.	TOP OF ROOF	B.O.O.	BOTTOM OF OPENING
T.O.D.	TOP OF DOOR	B.O.T.	BOTTOM OF TRENCH
B.O.Ca.	BOTTOM OF CAGE	B.O.P.	BOTTOM OF PIT
T.O.Ca.	TOP OF CAGE	R.H.P.	ROOF HIGHEST POINT
B.O.G.	BOTTOM OF GUTTER	R.L.P.	ROOF LOWEST POINT
T.O.Ca.	TOP OF CAGE	N.G.R.	NEUTRAL GROUND RESISTOR
M.D.	METAL DOOR	B.P.D.	BLAST-PROOF DOOR
T.O.S.	TOP OF SLAB	F.D.	FENCE DOOR

REFERENCE DRAWING	DRG. No.
STANDARD DRAWING FOR ARCHITECTURAL DETAILS	BK-GNRAL-PEDCO-000-AR-DW-0001
SITE SEWARAGE SYSTEM LAYOUT & DETAILS	BK-GCS-PEDCO-120-CV-PY-0001
CABLE TRENCH AND DUCT BANK LAYOUT	BK-GCS-PEDCO-120-CV-PY-0002
ELECTRICAL CABLE ROUTE & SECTION LAYOUT FOR BUILDING & SHELTER	BK-GCS-PEDCO-120-EL-PY-0006
FOUNDATION DRAWING FOR EXTENSION OF EXISTING ELECT. BUILDING	BK-GCS-PEDCO-120-ST-DW-0063
STRUCTURAL DRAWING FOR EXTENSION OF EXISTING ELECT. BUILDING	BK-GCS-PEDCO-120-ST-DW-0064
STANDARD DETAILS FOR LADDER & SAFETY CAGE	BK-GNRAL-PEDCO-000-ST-DW-0009
ELECTRICAL EQUIPMENT ARRANGEMENT LAYOUT FOR BUILDING	BK-GCS-PEDCO-120-ST-EL-PY-0006
UNIT PLOT PLAN DRAWING	BK-GCS-PEDCO-120-PI-PY-0001

KEY PLAN

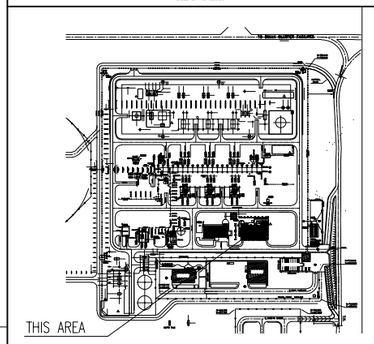

REV.	DATE	P.O.I.S	PREP.	CHK.	APP.	AUT.
D07	MAR.2024	AFC	R.BERLOUIE	M.FAKHARIAN	S.Paramarzpour	**.**
D06	NOV.2023	AFC	R.BERLOUIE	M.FAKHARIAN	S.Paramarzpour	**.**
D05	SEP.2023	AFC	R.BERLOUIE	M.FAKHARIAN	A.M.MOHSENI	**.**
D04	AUG.2023	IFA	R.BERLOUIE	M.FAKHARIAN	A.M.MOHSENI	**.**
D03	MAY.2023	IFA	R.BERLOUIE	M.FAKHARIAN	A.M.MOHSENI	**.**
D02	AUG.2022	IFA	R.BERLOUIE	M.FAKHARIAN	M.MEHRSHAD	**.**
D01	APR.2022	IFA	R.BERLOUIE	M.FAKHARIAN	M.MEHRSHAD	**.**
D00	JAN.2022	IFC	R.BERLOUIE	M.FAKHARIAN	M.MEHRSHAD	**.**

REV.	DESCRIPTION	CHECKED BY	CHECKED DATE	REV. APPR. BY	REV. APPR. DATE
***	**********	**.**	***.****	**.**	***.****

PROJECT NAME: BINAK OILFIELD DEVELOPMENT/SURFACE FACILITIES GAS COMPRESSOR STATION

PROJECT NO.: 971020

EPC CONTRACTOR: HIRGAN ENERGY – DESIGN & INSPECTION COMPANIES

EPD/EPC CONTRACTOR (GC): PEDCO — PETROIRAN DEVELOPMENT COMPANY

DRAWING TITLE: ARCHITECTURAL DETAIL DRAWING FOR EXTENSION OF EXISTING ELECT. BUILDING
ELEVATIONS

SCALE	SIZE	DRAWING NO.	SHEET NO.	REV.
AS SHOWN	A1	BK-GCS-PEDCO-120-AR-DW-0002	08 OF 15	D07

اصل و کلیه نسخ این نقشه و حق اقتباس متعلق به شرکت ملی مناطق نفت خیز جنوب میباشد.

THE ORIGINAL AND ALL COPIES OF THIS DRAWING TOGETHER WITH THE COPYRIGHT THEREIN ARE THE SOLE PROPERTY OF N.I.S.O.C./ FIELDS

BINAK OILFIELD DEVELOPMENT
SURFACE FACILITIES
GAS COMPRESSOR STATION

DATE	SCALE	DRAWING BY	CHECKED BY	PROJECT ENG.

NO CONSTRUCTION PERMITTED UNLESS DRAWING APPROVED

APPROVED FOR CONSTRUCTION BY: DATE:

BUDGET REF.	LOCATION	SIZE	CLASS	SERIAL NO.	SHEET	REVISION
053-073-9184	F	4	B	709100	08 OF 15	D07

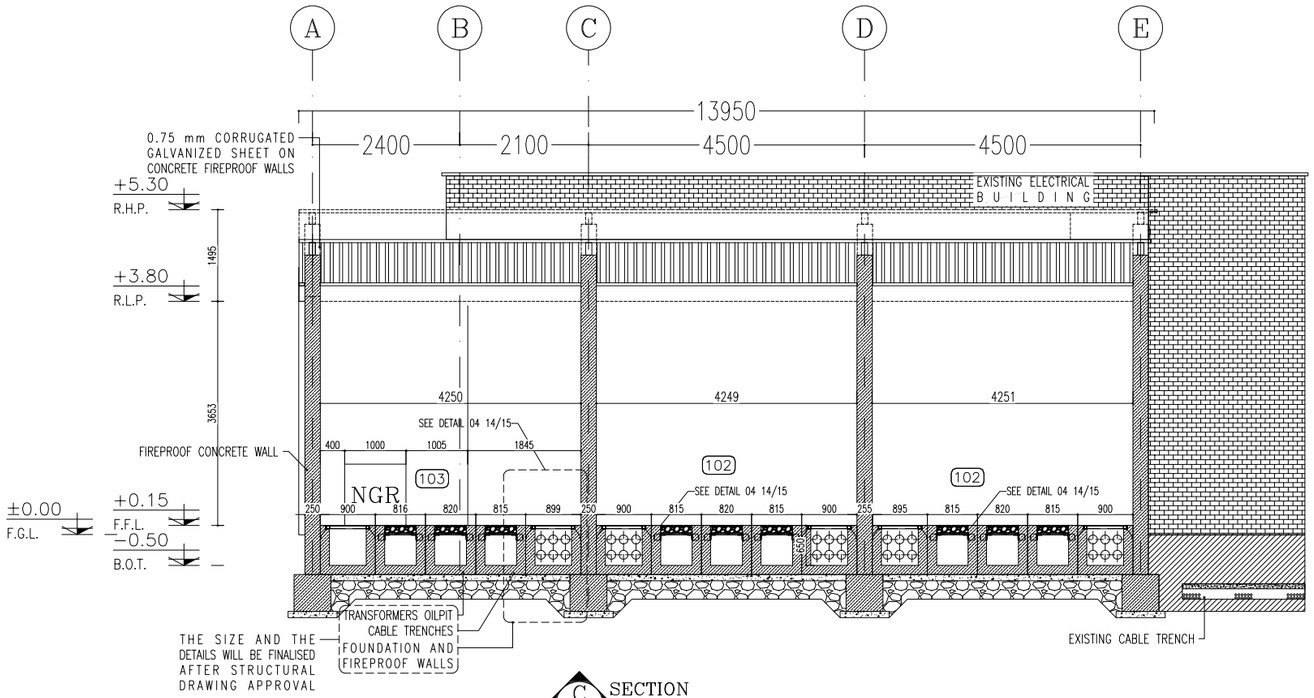

C SECTION
SC.1:50 (07 OF 15)

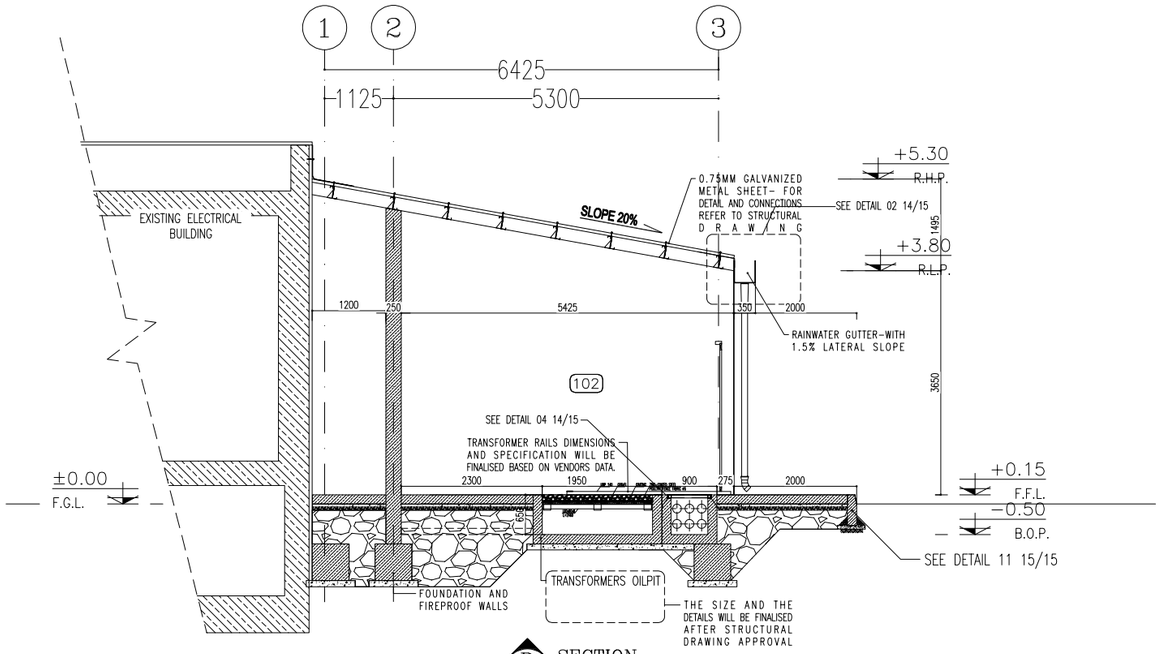

D SECTION
SC.1:50 (07 OF 15)

SPACE TAG NUMBER

- (100) CAPACITOR BANK
- (101) CO2 ROOM
- (102) TRANSFORMER ROOM
- (103) FIRE-FIGHTING PUMP TRANSFORMER ROOM
- (104) DIESEL ROOM

NOTES

1. ALL DIMENSIONS ARE IN CENTIMETER & ALL ELEVATIONS ARE IN METER.
2. ALL DIMENSIONS AND ELEVATIONS SHALL BE CHECKED BY THE CONTRACTOR PRIOR TO CONSTRUCTION.
3. CONTRACTOR SHALL COMPARE ALL ARCHITECTURAL, MECHANICAL, ELECTRICAL, PIPING AND STRUCTURAL DRAWINGS AND IN CASE OF ANY CONFLICTS OR DISCREPANCY, INFORM THE ENGINEER.
4. ALL MATERIALS ARE SELECTED FROM THE HIGHEST QUALITY AND MUST BE APPROVED BY THE CLIENT.
5. ALL OPENINGS FOR PIPING/CABLING AND HVAC OPENINGS SHALL BE CONSIDERED AS PER RELATED DRAWINGS BEFORE CONSTRUCTION.
6. ARCHITECTURAL DETAIL DESIGN WILL BE REVISED BASED ON APPROVED STRUCTURAL DRAWINGS.
7. ELEVATION CODE : LOCAL ±0.0m CORRESPONDS TO GLOBAL +11.10m

LEGEND

- LEAN CONCRETE
- REINFORCED CONCRETE
- PRESSED BRICK
- STONE
- EXPANSION JOINT FILLER (PLASTOFOAM)
- TERRAZZO TILES FOR ROOF – 30x30cm
- BLOCKAGE

F.FL.	FINISHED FLOOR	B.O.P.	BOTTOM OF PIT
T.O.WA	TOP OF WAIKWAY	F.G.L.	FINISH GRADING LEVEL
T.O.P.	TOP OF PARAPET	T.O.T.	TOP OF TRENCH
T.O.FOU.	TOP OF FOUNDATION	C.O.S.	CENTER OF SLEEVE
M.D	METAL DOOR	B.O.S.	BOTTOM OF SLEEVE
T.O.R.	TOP OF ROOF	B.O.O.	BOTTOM OF OPENING
T.O.D.	TOP OF DOOR	B.O.T.	BOTTOM OF TRENCH
B.O.Ca.	BOTTOM OF CAGE	B.O.P.	BOTTOM OF PIT
T.O.Ca.	TOP OF CAGE	R.H.P.	ROOF HIGHEST POINT
B.O.G.	BOTTOM OF GUTTER	R.L.P.	ROOF LOWEST POINT
T.O.Ca.	TOP OF CAGE	N.G.R.	NEUTRAL GROUND RESISTOR
M.D.	METAL DOOR	B.P.D.	BLAST–PROOF DOOR
T.O.S.	TOP OF SLAB	F.D.	FENCE DOOR

REFERENCE DRAWING	DRG. No.
STANDARD DRAWING FOR ARCHITECTURAL DETAILS	BK-GNRAL-PEDCO-000-AR-DW-0001
SITE SEWARAGE SYSTEM LAYOUT & DETAILS	BK-GCS-PEDCO-120-CV-PY-0001
CABLE TRENCH AND DUCT BANK LAYOUT	BK-GCS-PEDCO-120-CV-PY-0002
ELECTRICAL CABLE ROUTE & SECTION LAYOUT FOR BUILDING & SHELTER	BK-GCS-PEDCO-120-EL-PY-0006
FOUNDATION DRAWING FOR EXTENSION OF EXISTING ELECT. BUILDING	BK-GCS-PEDCO-120-ST-DW-0063
STRUCTURAL DRAWING FOR EXTENSION OF EXISTING ELECT. BUILDING	BK-GCS-PEDCO-120-ST-DW-0064
STANDARD DETAILS FOR LADDER & SAFETY CAGE	BK-GNRAL-PEDCO-000-ST-DW-0009
ELECTRICAL EQUIPMENT ARRANGEMENT LAYOUT FOR BUILDING	BK-GCS-PEDCO-120-ST-EL-PY-0006
UNIT PLOT PLAN DRAWING	BK-GCS-PEDCO-120-PI-PY-0001

KEY PLAN

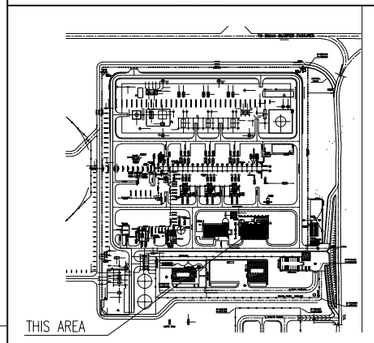

REV.	DATE	P.O.I.S	PREP.	CHK.	APP.	AUT.
D07	MAR.2024	AFC	R.BERLOUIE	M.FAKHARIAN	S.Paramarzpour	**.**
D06	NOV.2023	AFC	R.BERLOUIE	M.FAKHARIAN	S.Paramarzpour	**.**
D05	SEP.2023	AFC	R.BERLOUIE	M.FAKHARIAN	A.M.MOHSENI	**.**
D04	AUG.2023	IFA	R.BERLOUIE	M.FAKHARIAN	A.M.MOHSENI	**.**
D03	MAY.2023	IFA	R.BERLOUIE	M.FAKHARIAN	A.M.MOHSENI	**.**
D02	AUG.2022	IFA	R.BERLOUIE	M.FAKHARIAN	M.MEHRSHAD	**.**
D01	APR.2022	IFA	R.BERLOUIE	M.FAKHARIAN	M.MEHRSHAD	**.**
D00	JAN.2022	IFC	R.BERLOUIE	M.FAKHARIAN	M.MEHRSHAD	**.**

REV.	DESCRIPTION	CHECKED BY	CHECKED DATE	REV. APPR. BY	REV. APPR. DATE
***	**********	**.**	***.****	**.**	***.****

PROJECT NAME: BINAK OILFIELD DEVELOPMENT/SURFACE FACILITIES GAS COMPRESSOR STATION

PROJECT NO.: 971020

EPC CONTRACTOR: HIRGAN ENERGY – DESIGN & INSPECTION COMPANIES

EPD/EPC CONTRACTOR (GC): PEDCO — PETROIRAN DEVELOPMENT COMPANY

DRAWING TITLE: ARCHITECTURAL DETAIL DRAWING FOR EXTENSION OF EXISTING ELECT. BUILDING
SECTIONS

SCALE	SIZE	DRAWING NO.	SHEET NO.	REV.
AS SHOWN	A1	BK-GCS-PEDCO-120-AR-DW-0002	09 OF 15	D07

اصل و کلیه نسخ این نقشه و حق اقتباس متعلق به شرکت ملی مناطق نفت خیز جنوب میباشد.

THE ORIGINAL AND ALL COPIES OF THIS DRAWING TOGETHER WITH THE COPYRIGHT THEREIN ARE THE SOLE PROPERTY OF N.I.S.O.C./ FIELDS

BINAK OILFIELD DEVELOPMENT
SURFACE FACILITIES
GAS COMPRESSOR STATION

DATE	SCALE	DRAWING BY	CHECKED BY	PROJECT ENG.

NO CONSTRUCTION PERMITTED UNLESS DRAWING APPROVED

APPROVED FOR CONSTRUCTION BY: DATE:

BUDGET REF.	LOCATION	SIZE	CLASS	SERIAL NO.	SHEET	REVISION
053-073-9184	F	4	B	709100	09 OF 15	D07

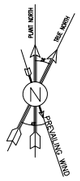

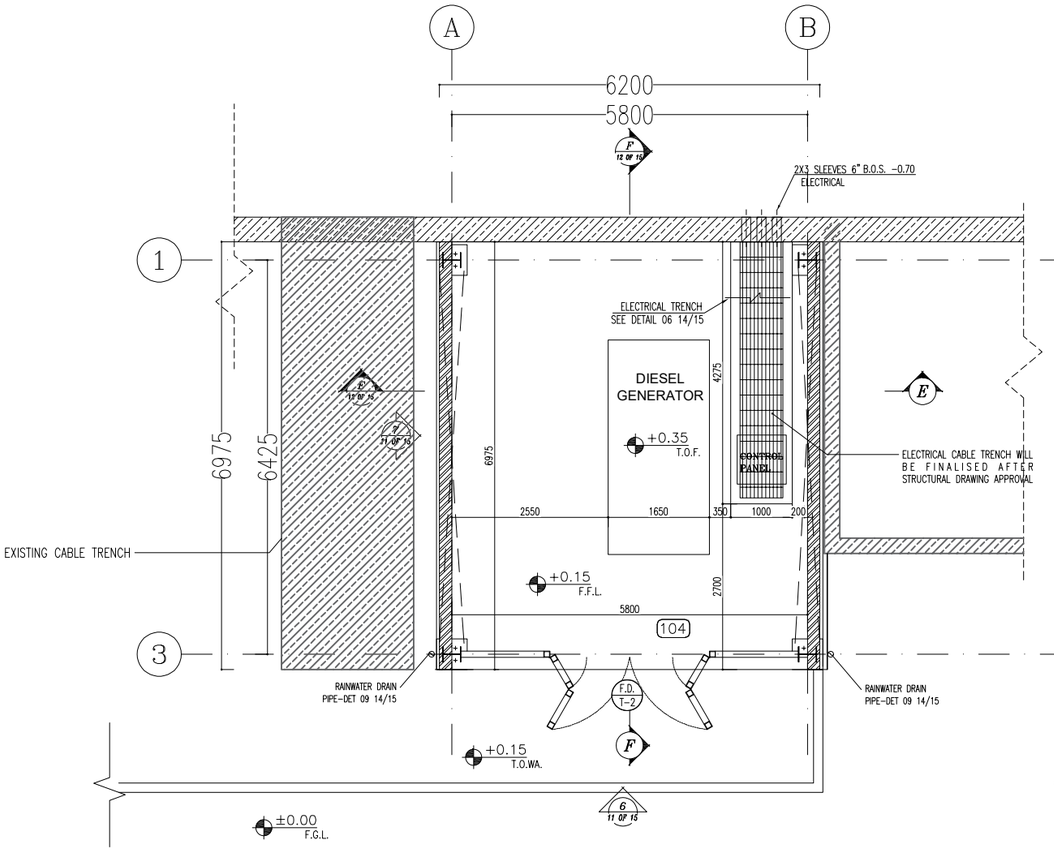

6 DIESEL ROOM PLAN

SC.1:50

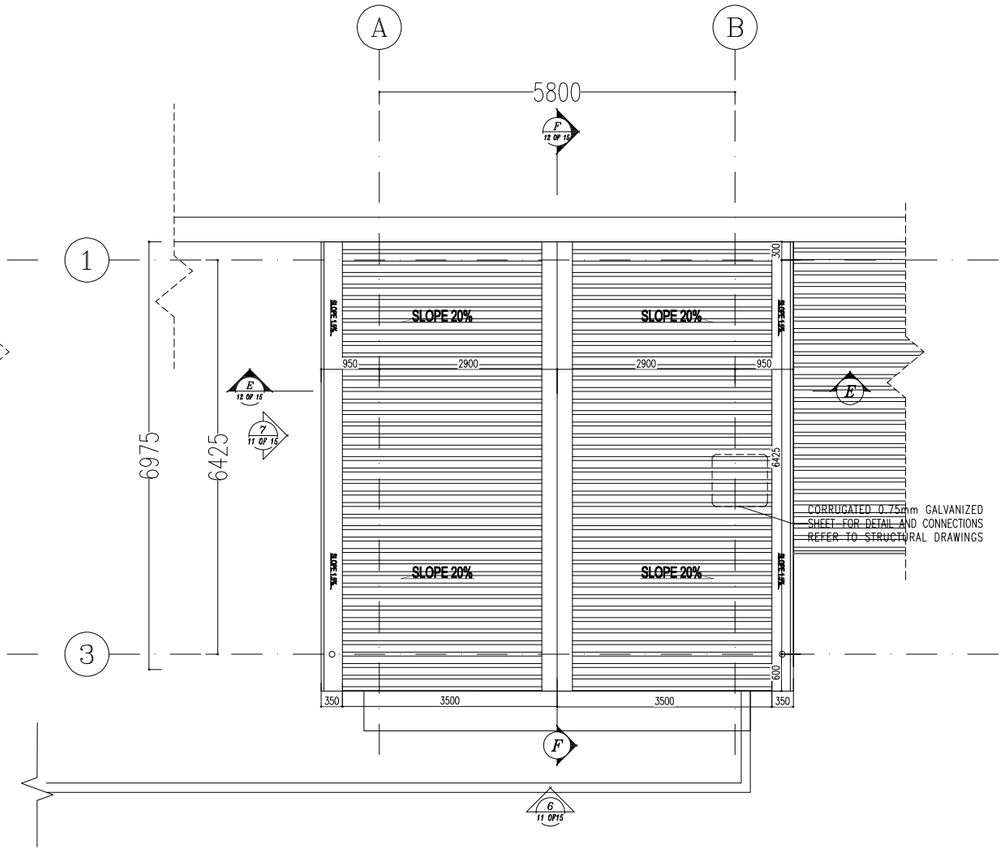

7 DIESEL ROOM ROOF PLAN

SC.1:50

NOTES

1. ALL DIMENSIONS ARE IN CENTIMETER & ALL ELEVATIONS ARE IN METER.
2. ALL DIMENSIONS AND ELEVATIONS SHALL BE CHECKED BY THE CONTRACTOR PRIOR TO CONSTRUCTION.
3. CONTRACTOR SHALL COMPARE ALL ARCHITECTURAL, MECHANICAL, ELECTRICAL, PIPING AND STRUCTURAL DRAWINGS AND IN CASE OF ANY CONFLICTS OR DISCREPANCY, INFORM THE ENGINEER.
4. ALL MATERIALS ARE SELECTED FROM THE HIGHEST QUALITY AND MUST BE APPROVED BY THE CLIENT.
5. ALL OPENINGS FOR PIPING/CABLING AND HVAC OPENINGS SHALL BE CONSIDERED AS PER RELATED DRAWINGS BEFORE CONSTRUCTION.
6. ARCHITECTURAL DETAIL DESIGN WILL BE REVISED BASED ON APPROVED STRUCTURAL DRAWINGS.
7. ELEVATION CODE : LOCAL ±0.0m CORRESPONDS TO GLOBAL +11.10m

LEGEND

LEAN CONCRETE

REINFORCED CONCRETE

PRESSED BRICK

STONE

EXPANSION JOINT FILLER (PLASTOFOAM)

TERRAZZO TILES FOR ROOF – 30x30cm

BLOCKAGE

F.FL.	FINISHED FLOOR	B.O.P.	BOTTOM OF PIT
T.O.WA	TOP OF WAIKWAY	F.G.L.	FINISH GRADING LEVEL
T.O.P.	TOP OF PARAPET	T.O.T.	TOP OF TRENCH
T.O.FOU.	TOP OF FOUNDATION	C.O.S.	CENTER OF SLEEVE
M.D	METAL DOOR	B.O.S.	BOTTOM OF SLEEVE
T.O.R.	TOP OF ROOF	B.O.O.	BOTTOM OF OPENING
T.O.D.	TOP OF DOOR	B.O.T.	BOTTOM OF TRENCH
B.O.Ca.	BOTTOM OF CAGE	B.O.P.	BOTTOM OF PIT
T.O.Ca.	TOP OF CAGE	R.H.P.	ROOF HIGHEST POINT
B.O.G.	BOTTOM OF GUTTER	R.L.P.	ROOF LOWEST POINT
T.O.Ca.	TOP OF CAGE	N.G.R.	NEUTRAL GROUND RESISTOR
M.D.	METAL DOOR	B.P.D.	BLAST–PROOF DOOR
T.O.S.	TOP OF SLAB	F.D.	FENCE DOOR

REFERENCE DRAWING	DRG. No.
STANDARD DRAWING FOR ARCHITECTURAL DETAILS	BK-GNRAL-PEDCO-000-AR-DW-0001
SITE SEWARAGE SYSTEM LAYOUT & DETAILS	BK-GCS-PEDCO-120-CV-PY-0001
CABLE TRENCH AND DUCT BANK LAYOUT	BK-GCS-PEDCO-120-CV-PY-0002
ELECTRICAL CABLE ROUTE & SECTION LAYOUT FOR BUILDING & SHELTER	BK-GCS-PEDCO-120-EL-PY-0006
FOUNDATION DRAWING FOR EXTENSION OF EXISTING ELECT. BUILDING	BK-GCS-PEDCO-120-ST-DW-0063
STRUCTURAL DRAWING FOR EXTENSION OF EXISTING ELECT. BUILDING	BK-GCS-PEDCO-120-ST-DW-0064
STANDARD DETAILS FOR LADDER & SAFETY CAGE	BK-GNRAL-PEDCO-000-ST-DW-0009
ELECTRICAL EQUIPMENT ARRANGEMENT LAYOUT FOR BUILDING	BK-GCS-PEDCO-120-ST-EL-PY-0006
UNIT PLOT PLAN DRAWING	BK-GCS-PEDCO-120-PI-PY-0001

KEY PLAN

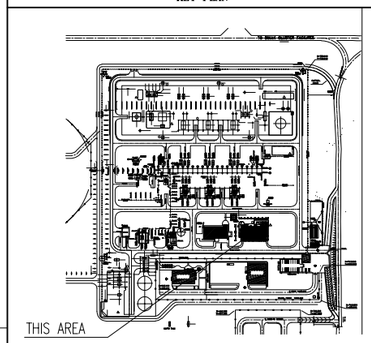

SPACE TAG NUMBER

100 CAPACITOR BANK
101 CO2 ROOM
102 TRANSFORMER ROOM
103 FIRE–FIGHTING PUMP TRANSFORMER ROOM
104 DIESEL ROOM

REV.	DATE	P.O.I.S	PREP.	CHK.	APP.	AUT.
D07	MAR.2024	AFC	R.BERLOUIE	M.FAKHARIAN	S.Paramarzpour	**.**
D06	NOV.2023	AFC	R.BERLOUIE	M.FAKHARIAN	S.Paramarzpour	**.**
D05	SEP.2023	AFC	R.BERLOUIE	M.FAKHARIAN	A.M.MOHSENI	**.**
D04	AUG.2023	IFA	R.BERLOUIE	M.FAKHARIAN	A.M.MOHSENI	**.**
D03	MAY.2023	IFA	R.BERLOUIE	M.FAKHARIAN	A.M.MOHSENI	**.**
D02	AUG.2022	IFA	R.BERLOUIE	M.FAKHARIAN	M.MEHRSHAD	**.**
D01	APR.2022	IFA	R.BERLOUIE	M.FAKHARIAN	M.MEHRSHAD	**.**
D00	JAN.2022	IFC	R.BERLOUIE	M.FAKHARIAN	M.MEHRSHAD	**.**

REV.	DESCRIPTION	CHECKED BY	CHECKED DATE	REV. APPR. BY	REV. APPR. DATE
***	**********	**.**	***.****	**.**	***.****

PROJECT NAME: BINAK OILFIELD DEVELOPMENT/SURFACE FACILITIES GAS COMPRESSOR STATION

PROJECT NO.: 971020

EPC CONTRACTOR: HIRGAN ENERGY – DESIGN & INSPECTION COMPANIES

EPD/EPC CONTRACTOR (GC): PETROIRAN DEVELOPMENT COMPANY (PEDCO)

DRAWING TITLE: ARCHITECTURAL DETAIL DRAWING FOR EXTENSION OF EXISTING ELECT. BUILDING
PLANS

SCALE	SIZE	DRAWING NO.	SHEET NO.	REV.
AS SHOWN	A1	BK-GCS-PEDCO-120-AR-DW-0002	10 OF 15	D07

اصل و کلیه نسخ این نقشه و حق اقتباس متعلق به شرکت ملی مناطق نفت خیز جنوب میباشد.

THE ORIGINAL AND ALL COPIES OF THIS DRAWING TOGETHER WITH THE COPYRIGHT THEREIN ARE THE SOLE PROPERTY OF N.I.S.O.C./ FIELDS

BINAK OILFIELD DEVELOPMENT
SURFACE FACILITIES
GAS COMPRESSOR STATION

DATE	SCALE	DRAWING BY	CHECKED BY	PROJECT ENG.

NO CONSTRUCTION PERMITTED UNLESS DRAWING APPROVED

APPROVED FOR CONSTRUCTION BY: DATE:

BUDGET REF.	LOCATION	SIZE	CLASS	SERIAL NO.	SHEET	REVISION
053-073-9184	F	4	B	709100	10 OF 15	D07

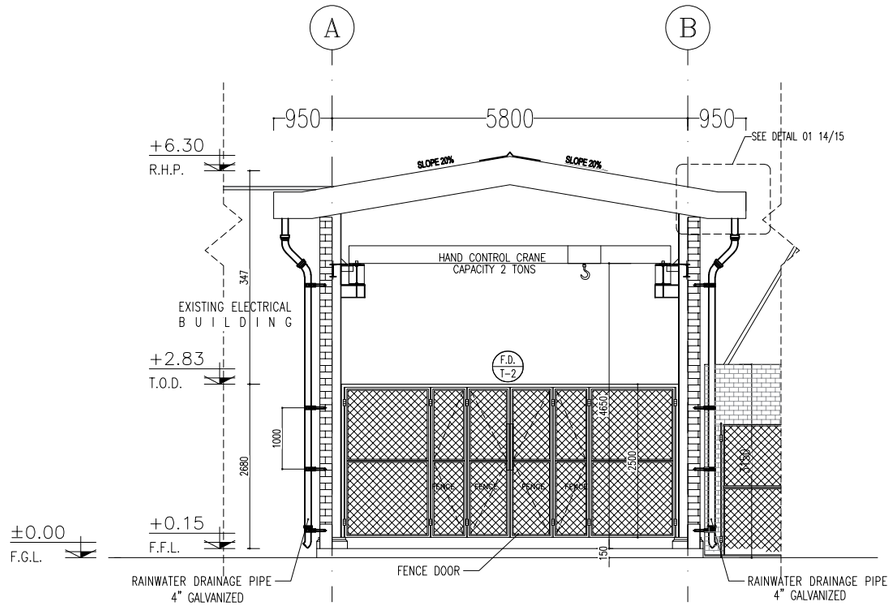

6 ELEVATION
SC.1:50 10 OF 15

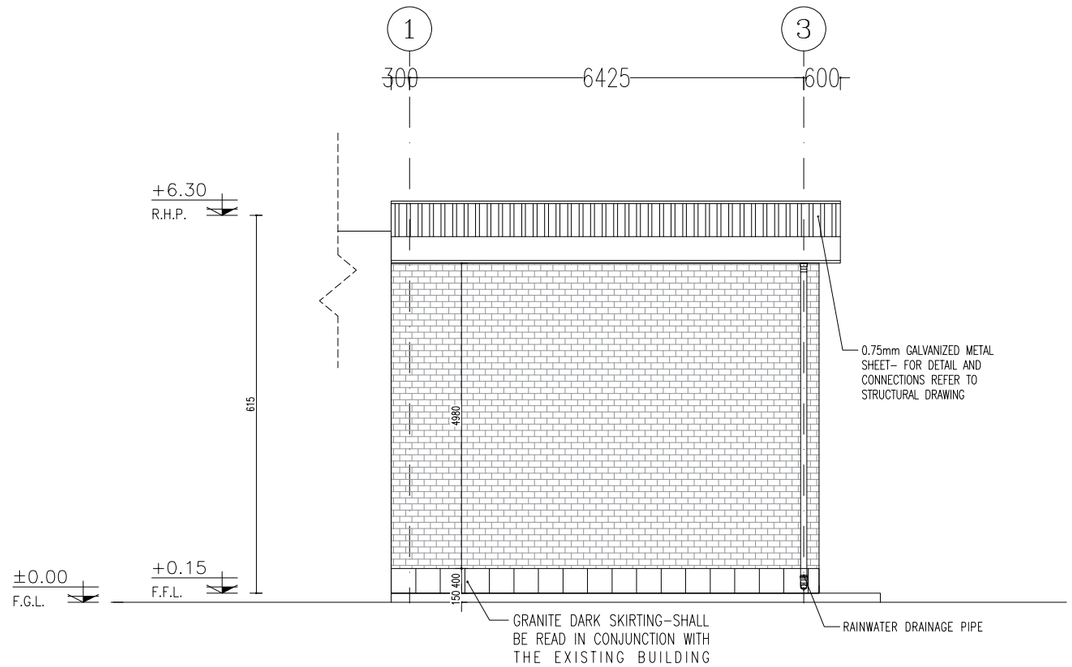

7 ELEVATION
SC.1:50 10 OF 15

NOTES

1. ALL DIMENSIONS ARE IN CENTIMETER & ALL ELEVATIONS ARE IN METER.
2. ALL DIMENSIONS AND ELEVATIONS SHALL BE CHECKED BY THE CONTRACTOR PRIOR TO CONSTRUCTION.
3. CONTRACTOR SHALL COMPARE ALL ARCHITECTURAL, MECHANICAL, ELECTRICAL, PIPING AND STRUCTURAL DRAWINGS AND IN CASE OF ANY CONFLICTS OR DISCREPANCY, INFORM THE ENGINEER.
4. ALL MATERIALS ARE SELECTED FROM THE HIGHEST QUALITY AND MUST BE APPROVED BY THE CLIENT.
5. ALL OPENINGS FOR PIPING/CABLING AND HVAC OPENINGS SHALL BE CONSIDERED AS PER RELATED DRAWINGS BEFORE CONSTRUCTION.
6. ARCHITECTURAL DETAIL DESIGN WILL BE REVISED BASED ON APPROVED STRUCTURAL DRAWINGS.
7. ELEVATION CODE : LOCAL ±0.0m CORRESPONDS TO GLOBAL +11.10m

LEGEND

LEAN CONCRETE
REINFORCED CONCRETE
PRESSED BRICK
STONE
EXPANSION JOINT FILLER (PLASTOFOAM)
TERRAZZO TILES FOR ROOF – 30x30cm
BLOCKAGE

F.FL.	FINISHED FLOOR	B.O.P.	BOTTOM OF PIT
T.O.WA	TOP OF WAIKWAY	F.G.L.	FINISH GRADING LEVEL
T.O.P.	TOP OF PARAPET	T.O.T.	TOP OF TRENCH
T.O.FOU.	TOP OF FOUNDATION	C.O.S.	CENTER OF SLEEVE
M.D	METAL DOOR	B.O.S.	BOTTOM OF SLEEVE
T.O.R.	TOP OF ROOF	B.O.O.	BOTTOM OF OPENING
T.O.D.	TOP OF DOOR	B.O.T.	BOTTOM OF TRENCH
B.O.Ca.	BOTTOM OF CAGE	B.O.P.	BOTTOM OF PIT
T.O.Ca.	TOP OF CAGE	R.H.P.	ROOF HIGHEST POINT
B.O.G.	BOTTOM OF GUTTER	R.L.P.	ROOF LOWEST POINT
T.O.Ca.	TOP OF CAGE	N.G.R.	NEUTRAL GROUND RESISTOR
M.D.	METAL DOOR	B.P.D.	BLAST-PROOF DOOR
T.O.S.	TOP OF SLAB	F.D.	FENCE DOOR

REFERENCE DRAWING	DRG. No.
STANDARD DRAWING FOR ARCHITECTURAL DETAILS	BK-GNRAL-PEDCO-000-AR-DW-0001
SITE SEWARAGE SYSTEM LAYOUT & DETAILS	BK-GCS-PEDCO-120-CV-PY-0001
CABLE TRENCH AND DUCT BANK LAYOUT	BK-GCS-PEDCO-120-CV-PY-0002
ELECTRICAL CABLE ROUTE & SECTION LAYOUT FOR BUILDING & SHELTER	BK-GCS-PEDCO-120-EL-PY-0006
FOUNDATION DRAWING FOR EXTENSION OF EXISTING ELECT. BUILDING	BK-GCS-PEDCO-120-ST-DW-0063
STRUCTURAL DRAWING FOR EXTENSION OF EXISTING ELECT. BUILDING	BK-GCS-PEDCO-120-ST-DW-0064
STANDARD DETAILS FOR LADDER & SAFETY CAGE	BK-GNRAL-PEDCO-000-ST-DW-0009
ELECTRICAL EQUIPMENT ARRANGEMENT LAYOUT FOR BUILDING	BK-GCS-PEDCO-120-ST-EL-PY-0006
UNIT PLOT PLAN DRAWING	BK-GCS-PEDCO-120-PI-PY-0001

KEY PLAN

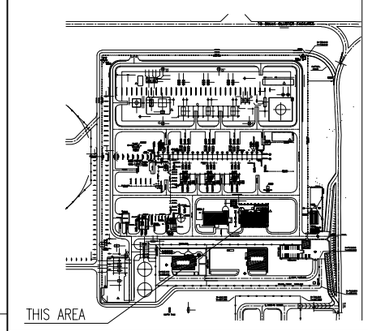

REV.	DATE	P.O.I.S	PREP.	CHK.	APP.	AUT.
D07	MAR.2024	AFC	R.BERLOUIE	M.FAKHARIAN	S.Paramarzpour	**.**
D06	NOV.2023	AFC	R.BERLOUIE	M.FAKHARIAN	S.Paramarzpour	**.**
D05	SEP.2023	AFC	R.BERLOUIE	M.FAKHARIAN	A.M.MOHSENI	**.**
D04	AUG.2023	IFA	R.BERLOUIE	M.FAKHARIAN	A.M.MOHSENI	**.**
D03	MAY.2023	IFA	R.BERLOUIE	M.FAKHARIAN	A.M.MOHSENI	**.**
D02	AUG.2022	IFA	R.BERLOUIE	M.FAKHARIAN	M.MEHRSHAD	**.**
D01	APR.2022	IFA	R.BERLOUIE	M.FAKHARIAN	M.MEHRSHAD	**.**
D00	JAN.2022	IFC	R.BERLOUIE	M.FAKHARIAN	M.MEHRSHAD	**.**

REV.	DESCRIPTION	CHECKED BY	CHECKED DATE	REV. APPR. BY	REV. APPR. DATE
***	**********	**.**	***.****	**.**	***.****

PROJECT NAME: BINAK OILFIELD DEVELOPMENT/SURFACE FACILITIES GAS COMPRESSOR STATION

PROJECT NO.: 971020

EPC CONTRACTOR: HIRGAN ENERGY – DESIGN & INSPECTION COMPANIES

EPD/EPC CONTRACTOR (GC): PEDCO — PETROIRAN DEVELOPMENT COMPANY

DRAWING TITLE: ARCHITECTURAL DETAIL DRAWING FOR EXTENSION OF EXISTING ELECT. BUILDING
ELEVATIONS

SCALE	SIZE	DRAWING NO.	SHEET NO.	REV.
AS SHOWN	A1	BK-GCS-PEDCO-120-AR-DW-0002	11 OF 15	D07

اصل و کلیه نسخ این نقشه و حق اقتباس متعلق به شرکت ملی مناطق نفت خیز جنوب میباشد.

THE ORIGINAL AND ALL COPIES OF THIS DRAWING TOGETHER WITH THE COPYRIGHT THEREIN ARE THE SOLE PROPERTY OF N.I.S.O.C./ FIELDS

BINAK OILFIELD DEVELOPMENT
SURFACE FACILITIES
GAS COMPRESSOR STATION

DATE	SCALE	DRAWING BY	CHECKED BY	PROJECT ENG.

NO CONSTRUCTION PERMITTED UNLESS DRAWING APPROVED

APPROVED FOR CONSTRUCTION BY: DATE:

BUDGET REF.	LOCATION	SIZE	CLASS	SERIAL NO.	SHEET	REVISION
053-073-9184	F	4	B	709100	11 OF 15	D07

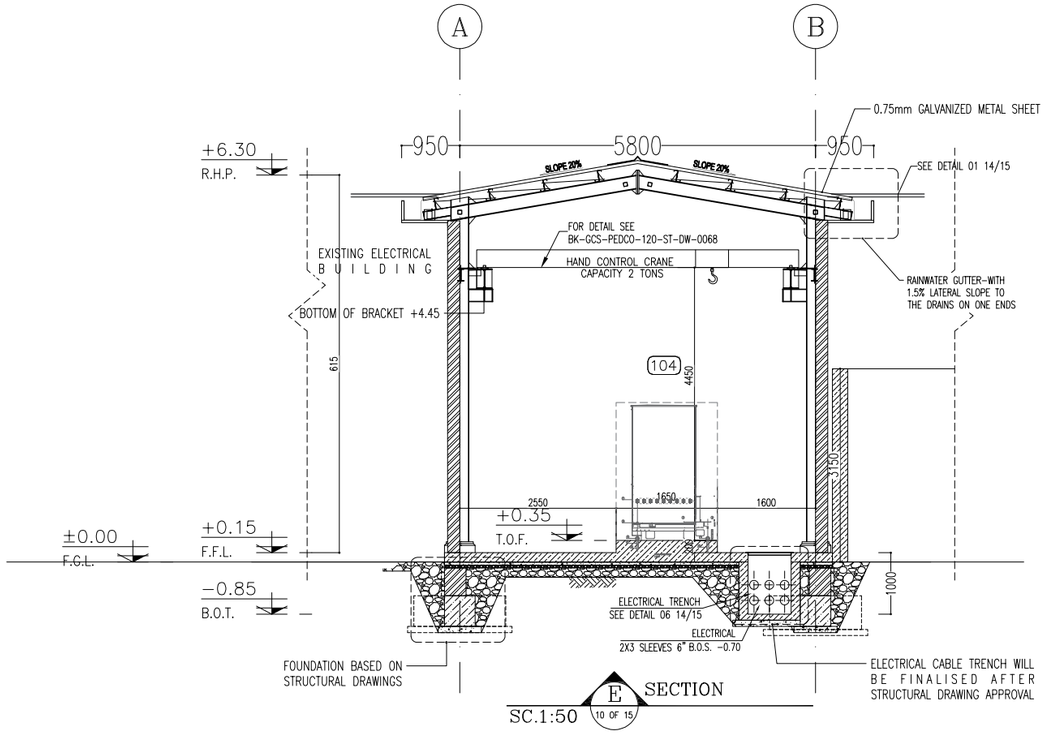

E SECTION
SC.1:50 10 OF 15

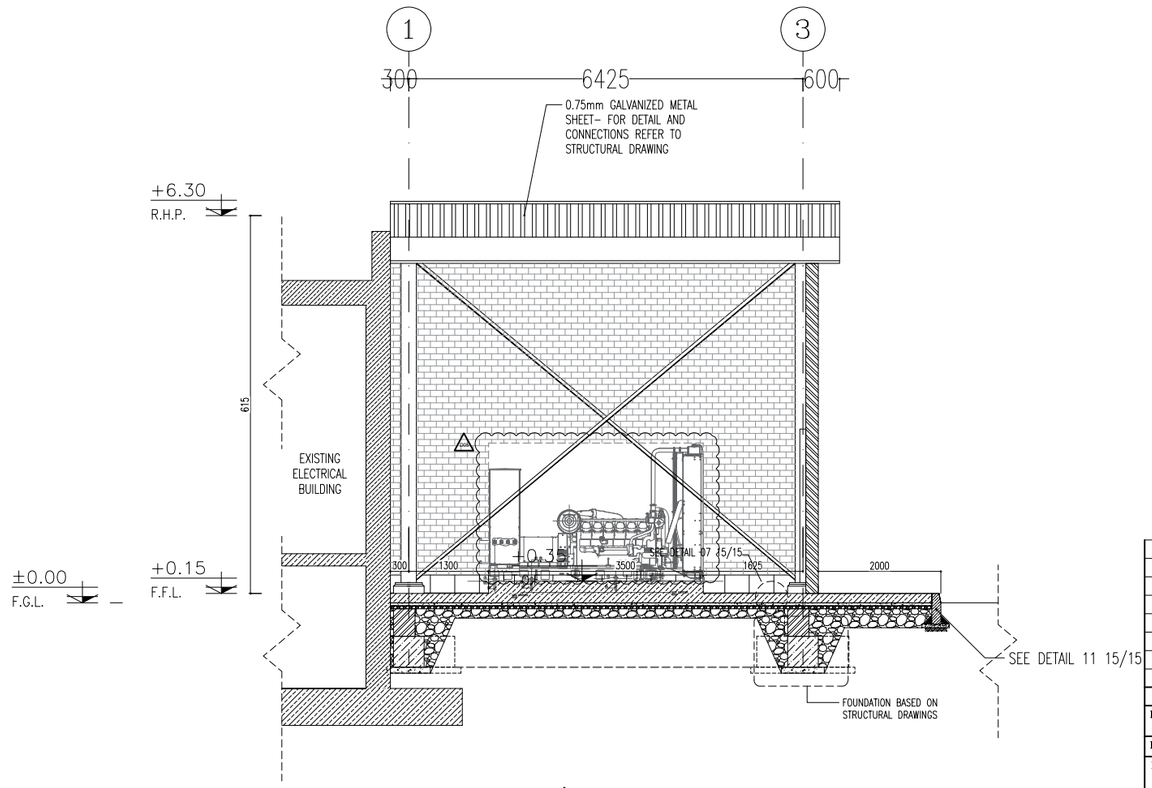

F SECTION
SC.1:50 10 OF 15

NOTES

1. ALL DIMENSIONS ARE IN CENTIMETER & ALL ELEVATIONS ARE IN METER.
2. ALL DIMENSIONS AND ELEVATIONS SHALL BE CHECKED BY THE CONTRACTOR PRIOR TO CONSTRUCTION.
3. CONTRACTOR SHALL COMPARE ALL ARCHITECTURAL, MECHANICAL, ELECTRICAL, PIPING AND STRUCTURAL DRAWINGS AND IN CASE OF ANY CONFLICTS OR DISCREPANCY, INFORM THE ENGINEER.
4. ALL MATERIALS ARE SELECTED FROM THE HIGHEST QUALITY AND MUST BE APPROVED BY THE CLIENT.
5. ALL OPENINGS FOR PIPING/CABLING AND HVAC OPENINGS SHALL BE CONSIDERED AS PER RELATED DRAWINGS BEFORE CONSTRUCTION.
6. ARCHITECTURAL DETAIL DESIGN WILL BE REVISED BASED ON APPROVED STRUCTURAL DRAWINGS.
7. ELEVATION CODE : LOCAL ±0.0m CORRESPONDS TO GLOBAL +11.10m

LEGEND

LEAN CONCRETE
REINFORCED CONCRETE
PRESSED BRICK
STONE
EXPANSION JOINT FILLER (PLASTOFOAM)
TERRAZZO TILES FOR ROOF – 30x30cm
BLOCKAGE

F.FL.	FINISHED FLOOR	B.O.P.	BOTTOM OF PIT
T.O.WA	TOP OF WAIKWAY	F.G.L.	FINISH GRADING LEVEL
T.O.P.	TOP OF PARAPET	T.O.T.	TOP OF TRENCH
T.O.FOU.	TOP OF FOUNDATION	C.O.S.	CENTER OF SLEEVE
M.D	METAL DOOR	B.O.S.	BOTTOM OF SLEEVE
T.O.R.	TOP OF ROOF	B.O.O.	BOTTOM OF OPENING
T.O.D.	TOP OF DOOR	B.O.T.	BOTTOM OF TRENCH
B.O.Ca.	BOTTOM OF CAGE	B.O.P.	BOTTOM OF PIT
T.O.Ca.	TOP OF CAGE	R.H.P.	ROOF HIGHEST POINT
B.O.G.	BOTTOM OF GUTTER	R.L.P.	ROOF LOWEST POINT
T.O.Ca.	TOP OF CAGE	N.G.R.	NEUTRAL GROUND RESISTOR
M.D.	METAL DOOR	B.P.D.	BLAST–PROOF DOOR
T.O.S.	TOP OF SLAB	F.D.	FENCE DOOR

REFERENCE DRAWING	DRG. No.
STANDARD DRAWING FOR ARCHITECTURAL DETAILS	BK-GNRAL-PEDCO-000-AR-DW-0001
SITE SEWARAGE SYSTEM LAYOUT & DETAILS	BK-GCS-PEDCO-120-CV-PY-0001
CABLE TRENCH AND DUCT BANK LAYOUT	BK-GCS-PEDCO-120-CV-PY-0002
ELECTRICAL CABLE ROUTE & SECTION LAYOUT FOR BUILDING & SHELTER	BK-GCS-PEDCO-120-EL-PY-0006
FOUNDATION DRAWING FOR EXTENSION OF EXISTING ELECT. BUILDING	BK-GCS-PEDCO-120-ST-DW-0063
STRUCTURAL DRAWING FOR EXTENSION OF EXISTING ELECT. BUILDING	BK-GCS-PEDCO-120-ST-DW-0064
STANDARD DETAILS FOR LADDER & SAFETY CAGE	BK-GNRAL-PEDCO-000-ST-DW-0009
ELECTRICAL EQUIPMENT ARRANGEMENT LAYOUT FOR BUILDING	BK-GCS-PEDCO-120-ST-EL-PY-0006
UNIT PLOT PLAN DRAWING	BK-GCS-PEDCO-120-PI-PY-0001

KEY PLAN

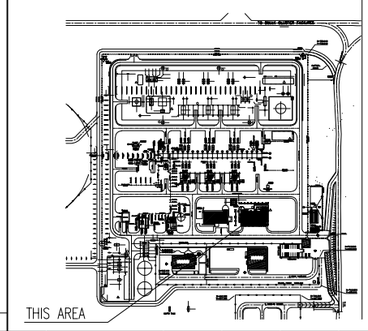

REV.	DATE	P.O.I.S	PREP.	CHK.	APP.	AUT.
D07	MAR.2024	AFC	R.BERLOUIE	M.FAKHARIAN	S.Paramarzpour	**.**
D06	NOV.2023	AFC	R.BERLOUIE	M.FAKHARIAN	S.Paramarzpour	**.**
D05	SEP.2023	AFC	R.BERLOUIE	M.FAKHARIAN	A.M.MOHSENI	**.**
D04	AUG.2023	IFA	R.BERLOUIE	M.FAKHARIAN	A.M.MOHSENI	**.**
D03	MAY.2023	IFA	R.BERLOUIE	M.FAKHARIAN	A.M.MOHSENI	**.**
D02	AUG.2022	IFA	R.BERLOUIE	M.FAKHARIAN	M.MEHRSHAD	**.**
D01	APR.2022	IFA	R.BERLOUIE	M.FAKHARIAN	M.MEHRSHAD	**.**
D00	JAN.2022	IFC	R.BERLOUIE	M.FAKHARIAN	M.MEHRSHAD	**.**

REV.	DESCRIPTION	BY	DATE	BY	DATE
***	**********	**.**	***.****	**.**	***.****
		CHECKED		REV. APPR.	

PROJECT NAME: BINAK OILFIELD DEVELOPMENT/SURFACE FACILITIES GAS COMPRESSOR STATION

PROJECT NO.: 971020

EPC CONTRACTOR: HIRGAN ENERGY – DESIGN & INSPECTION COMPANIES

EPD/EPC CONTRACTOR (GC): PEDCO — PETROIRAN DEVELOPMENT COMPANY

DRAWING TITLE: ARCHITECTURAL DETAIL DRAWING FOR EXTENSION OF EXISTING ELECT. BUILDING
SECTIONS

SCALE	SIZE	DRAWING NO.	SHEET NO.	REV.
AS SHOWN	A1	BK-GCS-PEDCO-120-AR-DW-0002	12 OF 15	D07

اصل و کلیه نسخ این نقشه و حق اقتباس متعلق به شرکت ملی مناطق نفت خیز جنوب میباشد.

THE ORIGINAL AND ALL COPIES OF THIS DRAWING TOGETHER WITH THE COPYRIGHT THEREIN ARE THE SOLE PROPERTY OF
N.I.S.O.C./ FIELDS

BINAK OILFIELD DEVELOPMENT
SURFACE FACILITIES
GAS COMPRESSOR STATION

DATE	SCALE	DRAWING BY	CHECKED BY	PROJECT ENG.

NO CONSTRUCTION PERMITTED UNLESS DRAWING APPROVED

APPROVED FOR CONSTRUCTION | BY: | DATE:

BUDGET REF.	LOCATION	SIZE	CLASS	SERIAL NO.	SHEET	REVISION
053-073-9184	F	4	B	709100	12 OF 15	D07

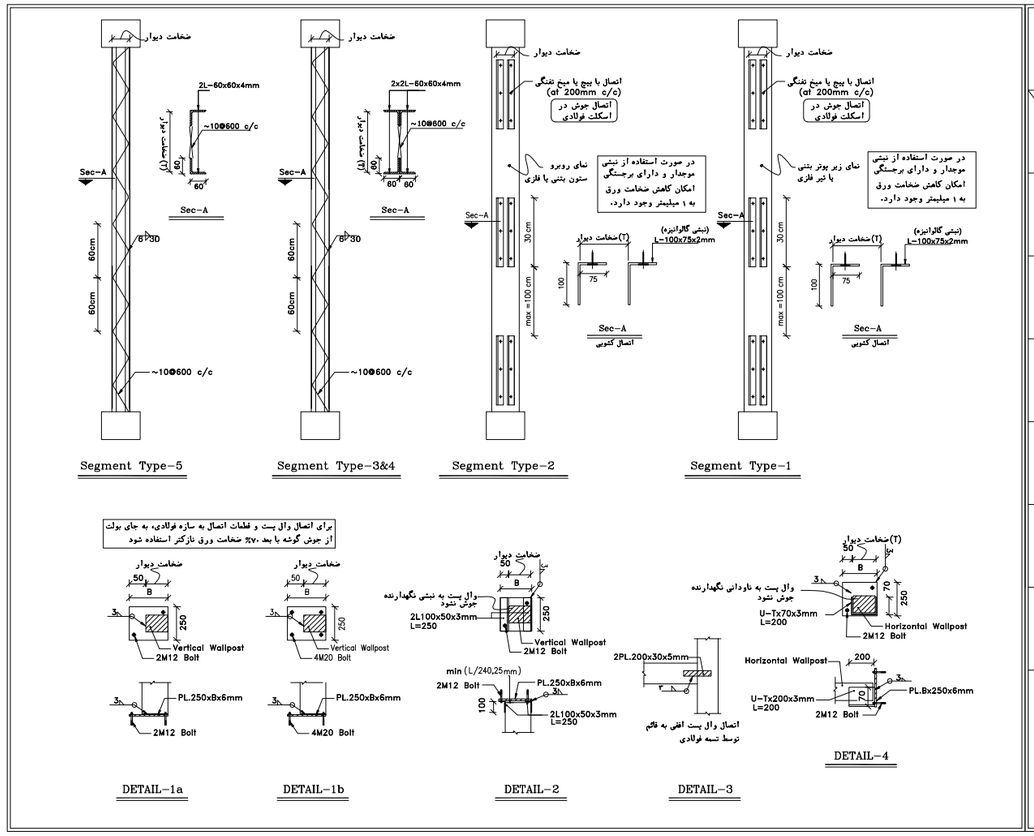

FINISHING SCHEDULE

	AREA	FLOOR	INTERNAL SKIRTING	EXTERNAL SKIRTING	INTERNAL WALL	EXTERNAL WALL	CEILING
100	CAPACITOR BANK	TERRAZZO TILE	DARK GRANITE STONE 100cm	DARK GRANITE STONE 40cm	2 CM CEMENT PLASTER+GYPSUM PLASTER+OIL PAINT FINISH	BRICK FACING	2 CM CEMENT PLASTER+GYPSUM PLASTER+OIL PAINT FINISH
101	CO2 ROOM	TERRAZZO TILE	DARK GRANITE STONE 100cm	DARK GRANITE STONE 40cm	2 CM CEMENT PLASTER+GYPSUM PLASTER+OIL PAINT FINISH	BRICK FACING	2 CM CEMENT PLASTER+GYPSUM PLASTER+OIL PAINT FINISH
102	TRANSFORMER ROOM	CONCRETE	DARK GRANITE STONE 30cm	—	WHITE CEMENT PLASTER	DARK GRANITE STONE	0.75mm CORRUGATED GALVANIZED SHEET
103	FIRE-FIGHTING PUMP TRANSFORMER ROOM	CONCRETE	DARK GRANITE STONE 30cm	—	WHITE CEMENT PLASTER	DARK GRANITE STONE	0.75mm CORRUGATED GALVANIZED SHEET
104	DIESEL ROOM	CONCRETE	DARK GRANITE STONE 30cm	DARK GRANITE STONE 40cm	BRICK FACING	BRICK FACING	0.75mm CORRUGATED GALVANIZED SHEET
105	ROOF	TERRAZZO TILE	TERRAZZO TILE	—	CEMENT PLASTER	—	—

8 FINISHING SCHEDULE

NOTES

1. ALL DIMENSIONS ARE IN CENTIMETER & ALL ELEVATIONS ARE IN METER.
2. ALL DIMENSIONS AND ELEVATIONS SHALL BE CHECKED BY THE CONTRACTOR PRIOR TO CONSTRUCTION.
3. CONTRACTOR SHALL COMPARE ALL ARCHITECTURAL, MECHANICAL, ELECTRICAL, PIPING AND STRUCTURAL DRAWINGS AND IN CASE OF ANY CONFLICTS OR DISCREPANCY, INFORM THE ENGINEER.
4. ALL MATERIALS ARE SELECTED FROM THE HIGHEST QUALITY AND MUST BE APPROVED BY THE CLIENT.
5. ALL OPENINGS FOR PIPING/CABLING AND HVAC OPENINGS SHALL BE CONSIDERED AS PER RELATED DRAWINGS BEFORE CONSTRUCTION.
6. ARCHITECTURAL DETAIL DESIGN WILL BE REVISED BASED ON APPROVED STRUCTURAL DRAWINGS.
7. ELEVATION CODE : LOCAL ±0.0m CORRESPONDS TO GLOBAL +11.10m

LEGEND

LEAN CONCRETE
REINFORCED CONCRETE
PRESSED BRICK
STONE
EXPANSION JOINT FILLER (PLASTOFOAM)
TERRAZZO TILES FOR ROOF – 30x30cm
BLOCKAGE

F.FL.	FINISHED FLOOR	B.O.P.	BOTTOM OF PIT
T.O.WA	TOP OF WAIKWAY	F.G.L.	FINISH GRADING LEVEL
T.O.P.	TOP OF PARAPET	T.O.T.	TOP OF TRENCH
T.O.FOU.	TOP OF FOUNDATION	C.O.S.	CENTER OF SLEEVE
M.D	METAL DOOR	B.O.S.	BOTTOM OF SLEEVE
T.O.R.	TOP OF ROOF	B.O.O.	BOTTOM OF OPENING
T.O.D.	TOP OF DOOR	B.O.T.	BOTTOM OF TRENCH
B.O.Ca.	BOTTOM OF CAGE	B.O.P.	BOTTOM OF PIT
T.O.Ca.	TOP OF CAGE	R.H.P.	ROOF HIGHEST POINT
B.O.G.	BOTTOM OF GUTTER	R.L.P.	ROOF LOWEST POINT
T.O.Ca.	TOP OF CAGE	N.G.R.	NEUTRAL GROUND RESISTOR
M.D.	METAL DOOR	B.P.D.	BLAST-PROOF DOOR
T.O.S.	TOP OF SLAB	F.D.	FENCE DOOR

REFERENCE DRAWING	DRG. No.
STANDARD DRAWING FOR ARCHITECTURAL DETAILS	BK-GNRAL-PEDCO-000-AR-DW-0001
SITE SEWARAGE SYSTEM LAYOUT & DETAILS	BK-GCS-PEDCO-120-CV-PY-0001
CABLE TRENCH AND DUCT BANK LAYOUT	BK-GCS-PEDCO-120-CV-PY-0002
ELECTRICAL CABLE ROUTE & SECTION LAYOUT FOR BUILDING & SHELTER	BK-GCS-PEDCO-120-EL-PY-0006
FOUNDATION DRAWING FOR EXTENSION OF EXISTING ELECT. BUILDING	BK-GCS-PEDCO-120-ST-DW-0063
STRUCTURAL DRAWING FOR EXTENSION OF EXISTING ELECT. BUILDING	BK-GCS-PEDCO-120-ST-DW-0064
STANDARD DETAILS FOR LADDER & SAFETY CAGE	BK-GNRAL-PEDCO-000-ST-DW-0009
ELECTRICAL EQUIPMENT ARRANGEMENT LAYOUT FOR BUILDING	BK-GCS-PEDCO-120-ST-EL-PY-0006
UNIT PLOT PLAN DRAWING	BK-GCS-PEDCO-120-PI-PY-0001

DOOR TYPES

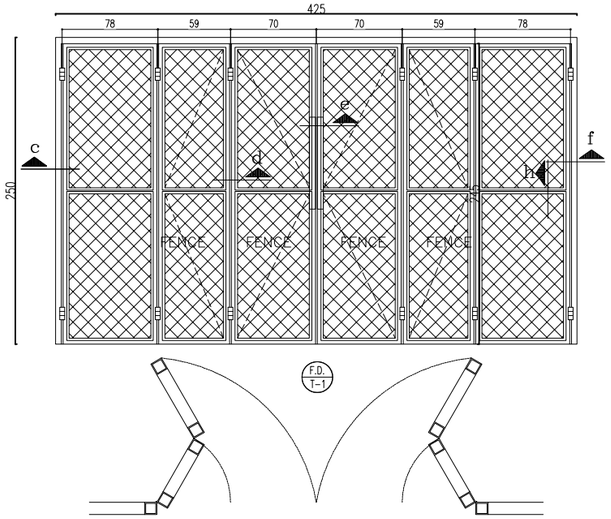

FENCE DOOR(F.D) – TYPE1
TOTAL: 3
Sc:1/25

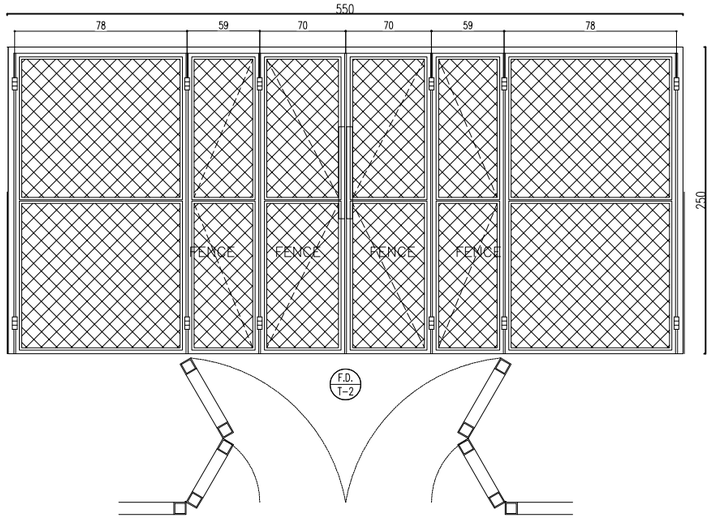

FENCE DOOR(F.D) – TYPE2
TOTAL: 1
Sc:1/25

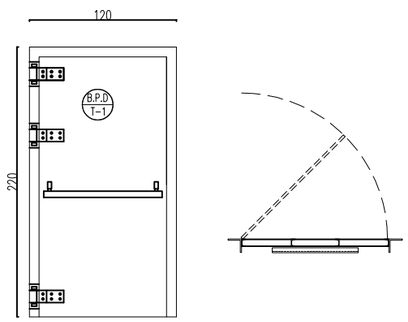

BLAST PROOF DOOR(B.P.D). – TYPE1
LEFT HAND: 2
TOTAL: 2
Sc:1/25

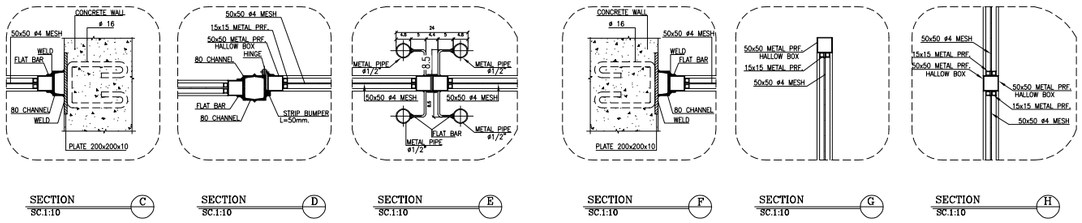

KEY PLAN

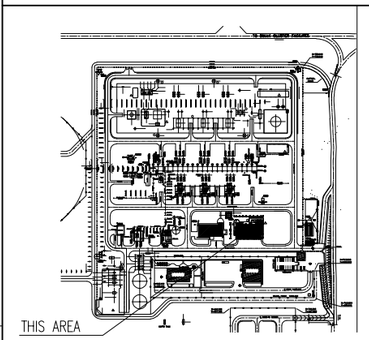

REV.	DATE	P.O.I.S	PREP.	CHK.	APP.	AUT.
D07	MAR.2024	AFC	R.BERLOUIE	M.FAKHARIAN	S.Paramarzpour	**.**
D06	NOV.2023	AFC	R.BERLOUIE	M.FAKHARIAN	S.Paramarzpour	**.**
D05	SEP.2023	AFC	R.BERLOUIE	M.FAKHARIAN	A.M.MOHSENI	**.**
D04	AUG.2023	IFA	R.BERLOUIE	M.FAKHARIAN	A.M.MOHSENI	**.**
D03	MAY.2023	IFA	R.BERLOUIE	M.FAKHARIAN	A.M.MOHSENI	**.**
D02	AUG.2022	IFA	R.BERLOUIE	M.FAKHARIAN	M.MEHRSHAD	**.**
D01	APR.2022	IFA	R.BERLOUIE	M.FAKHARIAN	M.MEHRSHAD	**.**
D00	JAN.2022	IFC	R.BERLOUIE	M.FAKHARIAN	M.MEHRSHAD	**.**

REV.	DESCRIPTION	BY	DATE	BY	DATE
		CHECKED		REV. APPR.	
***	**********	**.**	***.****	**.**	***.****

PROJECT NAME: BINAK OILFIELD DEVELOPMENT/SURFACE FACILITIES GAS COMPRESSOR STATION

PROJECT NO.: 971020

EPC CONTRACTOR: HIRGAN ENERGY – DESIGN & INSPECTION COMPANIES

EPD/EPC CONTRACTOR (GC): PEDCO — PETROIRAN DEVELOPMENT COMPANY

DRAWING TITLE: ARCHITECTURAL DETAIL DRAWING FOR EXTENSION OF EXISTING ELECT. BUILDING
DETAILS AND SCHEDULES

SCALE	SIZE	DRAWING NO.	SHEET NO.	REV.
AS SHOWN	A1	BK-GCS-PEDCO-120-AR-DW-0002	13 OF 15	D07

اصل و کلیه نسخ این نقشه و حق اقتباس متعلق به شرکت ملی مناطق نفت خیز جنوب میباشد.
THE ORIGINAL AND ALL COPIES OF THIS DRAWING TOGETHER WITH THE COPYRIGHT THEREIN ARE THE SOLE PROPERTY OF N.I.S.O.C./ FIELDS

BINAK OILFIELD DEVELOPMENT
SURFACE FACILITIES
GAS COMPRESSOR STATION

DATE	SCALE	DRAWING BY	CHECKED BY	PROJECT ENG.

NO CONSTRUCTION PERMITTED UNLESS DRAWING APPROVED

APPROVED FOR CONSTRUCTION | BY: | DATE:

BUDGET REF.	LOCATION	SIZE	CLASS	SERIAL NO.	SHEET	REVISION
053-073-9184	F	4	B	709100	13 OF 15	D07

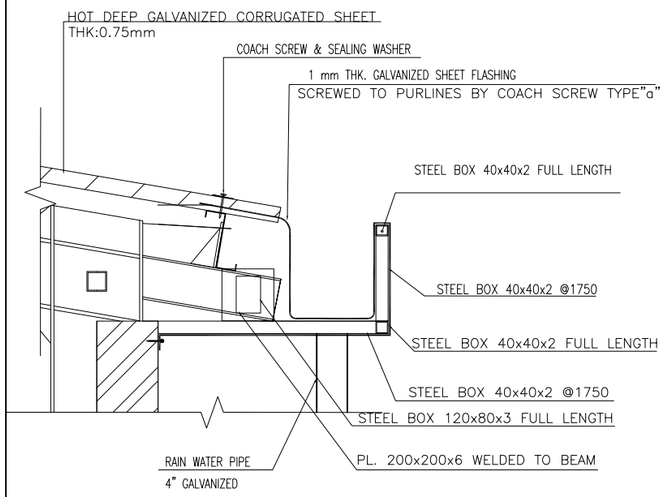

DETAIL 01
Sc:1/10

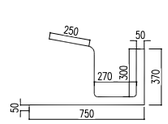

TYPE "a"

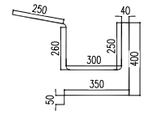

TYPE "b"

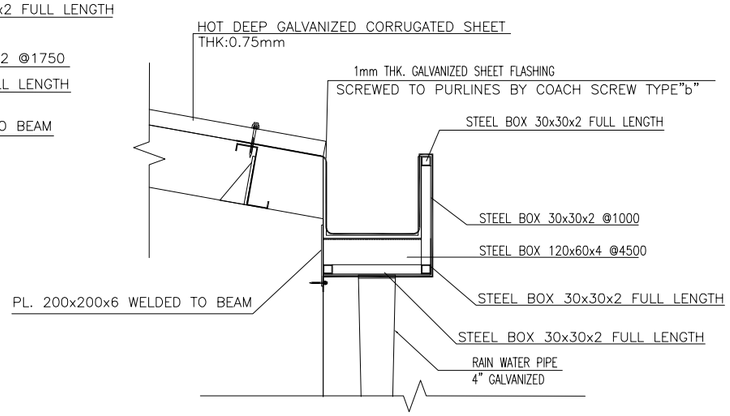

DETAIL 02
Sc:1/10

LINTEL SCHEDULE

WIDTH a	SPAN b mm	PROFILE mm a≥200	PROFILE mm a<200
VARIES– IT DEPENDS ON WALL THICKNESS AND IT'S FINISHING. REFER TO ARCHITECTURAL DWGS.	b≤1100	2L–60x60x6	UNP 100
	1100<b≤1500	2L–80x80x8	UNP 100
	1600<b≤2100	2L–100x100x10	2UNP 80
	2100<b≤3000	2IPE 160	2UNP 100
	3000<b≤3600	2IPE 180	2UNP 100

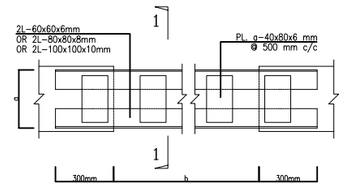

LINTEL PLAN –2L
Sc: N.T.S.

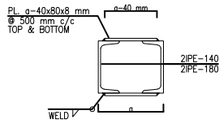

TYP. SECTION 2–2
Sc: 1:10

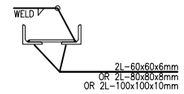

TYP. SECTION 1–1
Sc: 1:5

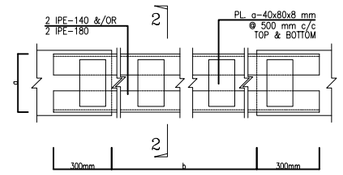

LINTEL PLAN –2 IPE
Sc: N.T.S.

NOTES

1. ALL DIMENSIONS ARE IN CENTIMETER & ALL ELEVATIONS ARE IN METER.
2. ALL DIMENSIONS AND ELEVATIONS SHALL BE CHECKED BY THE CONTRACTOR PRIOR TO CONSTRUCTION.
3. CONTRACTOR SHALL COMPARE ALL ARCHITECTURAL, MECHANICAL, ELECTRICAL, PIPING AND STRUCTURAL DRAWINGS AND IN CASE OF ANY CONFLICTS OR DISCREPANCY, INFORM THE ENGINEER.
4. ALL MATERIALS ARE SELECTED FROM THE HIGHEST QUALITY AND MUST BE APPROVED BY THE CLIENT.
5. ALL OPENINGS FOR PIPING/CABLING AND HVAC OPENINGS SHALL BE CONSIDERED AS PER RELATED DRAWINGS BEFORE CONSTRUCTION.
6. ARCHITECTURAL DETAIL DESIGN WILL BE REVISED BASED ON APPROVED STRUCTURAL DRAWINGS.
7. ELEVATION CODE : LOCAL ±0.0m CORRESPONDS TO GLOBAL +11.10m

LEGEND

LEAN CONCRETE
REINFORCED CONCRETE
PRESSED BRICK
STONE
EXPANSION JOINT FILLER (PLASTOFOAM)
TERRAZZO TILES FOR ROOF – 30x30cm
BLOCKAGE

F.FL.	FINISHED FLOOR	B.O.P.	BOTTOM OF PIT
T.O.WA	TOP OF WAIKWAY	F.G.L.	FINISH GRADING LEVEL
T.O.P.	TOP OF PARAPET	T.O.T.	TOP OF TRENCH
T.O.FOU.	TOP OF FOUNDATION	C.O.S.	CENTER OF SLEEVE
M.D	METAL DOOR	B.O.S.	BOTTOM OF SLEEVE
T.O.R.	TOP OF ROOF	B.O.O.	BOTTOM OF OPENING
T.O.D.	TOP OF DOOR	B.O.T.	BOTTOM OF TRENCH
B.O.Ca.	BOTTOM OF CAGE	B.O.P.	BOTTOM OF PIT
T.O.Ca.	TOP OF CAGE	R.H.P.	ROOF HIGHEST POINT
B.O.G.	BOTTOM OF GUTTER	R.L.P.	ROOF LOWEST POINT
T.O.Ca.	TOP OF CAGE	N.G.R.	NEUTRAL GROUND RESISTOR
M.D.	METAL DOOR	B.P.D.	BLAST–PROOF DOOR
T.O.S.	TOP OF SLAB	F.D.	FENCE DOOR

REFERENCE DRAWING	DRG. No.
STANDARD DRAWING FOR ARCHITECTURAL DETAILS	BK–GNRAL–PEDCO–000–AR–DW–0001
SITE SEWARAGE SYSTEM LAYOUT & DETAILS	BK–GCS–PEDCO–120–CV–PY–0001
CABLE TRENCH AND DUCT BANK LAYOUT	BK–GCS–PEDCO–120–CV–PY–0002
ELECTRICAL CABLE ROUTE & SECTION LAYOUT FOR BUILDING & SHELTER	BK–GCS–PEDCO–120–EL–PY–0006
FOUNDATION DRAWING FOR EXTENSION OF EXISTING ELECT. BUILDING	BK–GCS–PEDCO–120–ST–DW–0063
STRUCTURAL DRAWING FOR EXTENSION OF EXISTING ELECT. BUILDING	BK–GCS–PEDCO–120–ST–DW–0064
STANDARD DETAILS FOR LADDER & SAFETY CAGE	BK–GNRAL–PEDCO–000–ST–DW–0009
ELECTRICAL EQUIPMENT ARRANGEMENT LAYOUT FOR BUILDING	BK–GCS–PEDCO–120–ST–EL–PY–0008
UNIT PLOT PLAN DRAWING	BK–GCS–PEDCO–120–PI–PY–0001

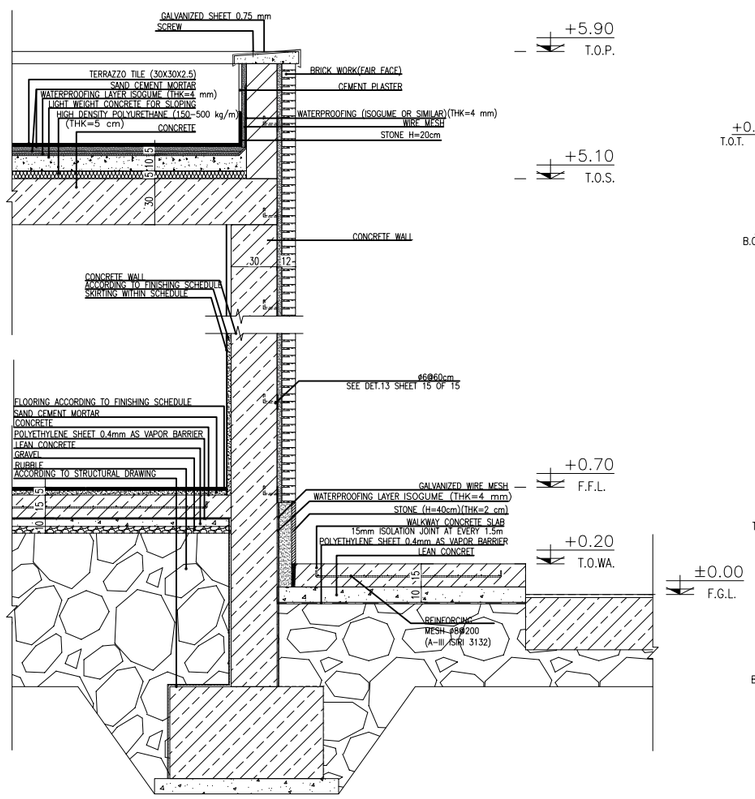

DETAIL 03–WALL SECTION
Sc:1/20

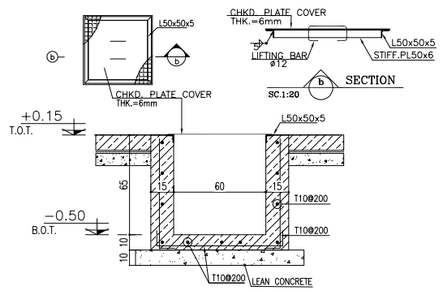

DETAIL 04
Sc:1/20

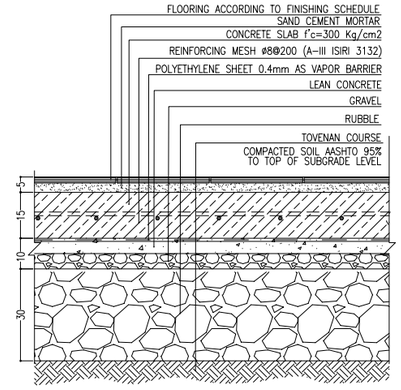

DETAIL 07–FLOORING (GROUND FLOOR)
Sc:1/10

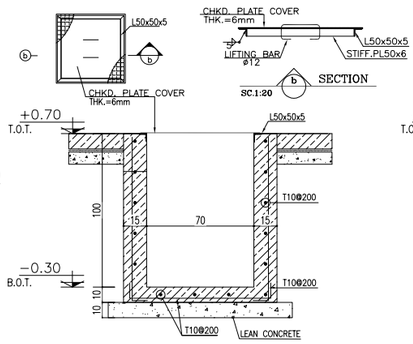

DETAIL 05
Sc:1/20

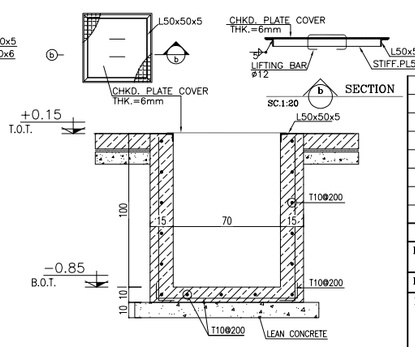

DETAIL 06
Sc:1/20

KEY PLAN

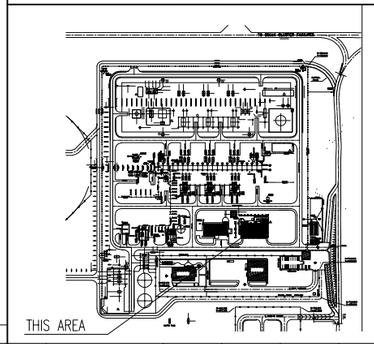

REV.	DESCRIPTION	BY	DATE	BY	DATE
		CHECKED		REV. APPR.	
***	**********	**.**	***.****	**.**	***.****
D07	MAR.2024	AFC	R.BERLOUIE	M.FAKHARIAN	S.Paramarzpour	**.**
D06	NOV.2023	AFC	R.BERLOUIE	M.FAKHARIAN	S.Paramarzpour	**.**
D05	SEP.2023	AFC	R.BERLOUIE	M.FAKHARIAN	A.M.MOHSENI	**.**
D04	AUG.2023	IFA	R.BERLOUIE	M.FAKHARIAN	A.M.MOHSENI	**.**
D03	MAY.2023	IFA	R.BERLOUIE	M.FAKHARIAN	A.M.MOHSENI	**.**
D02	AUG.2022	IFA	R.BERLOUIE	M.FAKHARIAN	M.MEHRSHAD	**.**
D01	APR.2022	IFA	R.BERLOUIE	M.FAKHARIAN	M.MEHRSHAD	**.**
D00	JAN.2022	IFC	R.BERLOUIE	M.FAKHARIAN	M.MEHRSHAD	**.**
REV.	DATE	P.O.I.S	PREP.	CHK.	APP.	AUT.

PROJECT NAME: BINAK OILFIELD DEVELOPMENT/SURFACE FACILITIES GAS COMPRESSOR STATION

PROJECT NO.: 971020

EPC CONTRACTOR: HIRGAN ENERGY – DESIGN & INSPECTION COMPANIES

EPD/EPC CONTRACTOR (GC): PEDCO — PETROIRAN DEVELOPMENT COMPANY

DRAWING TITLE: ARCHITECTURAL DETAIL DRAWING FOR EXTENSION OF EXISTING ELECT. BUILDING
DETAILS

SCALE	SIZE	DRAWING NO.	SHEET NO.	REV.
AS SHOWN	A1	BK–GCS–PEDCO–120–AR–DW–0002	14 OF 15	D07

اصل و کلیه نسخ این نقشه و حق اقتباس متعلق به شرکت ملی مناطق نفت خیز جنوب میباشد.

THE ORIGINAL AND ALL COPIES OF THIS DRAWING TOGETHER WITH THE COPYRIGHT THEREIN ARE THE SOLE PROPERTY OF N.I.S.O.C./ FIELDS

BINAK OILFIELD DEVELOPMENT
SURFACE FACILITIES
GAS COMPRESSOR STATION

DATE	SCALE	DRAWING BY	CHECKED BY	PROJECT ENG.

NO CONSTRUCTION PERMITTED UNLESS DRAWING APPROVED

APPROVED FOR CONSTRUCTION BY: DATE:

BUDGET REF.	LOCATION	SIZE	CLASS	SERIAL NO.	SHEET	REVISION
053–073–9184	F	4	B	709100	14 OF 15	D07

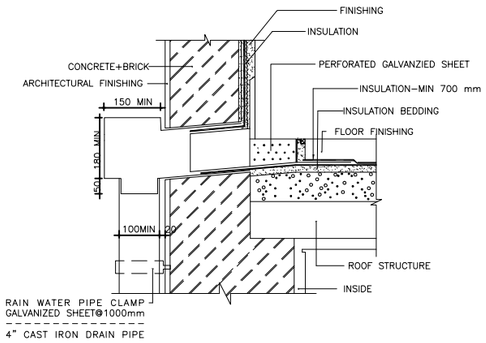

DETAIL 08 –RAIN WATER DISPOSAL
Sc:1/10

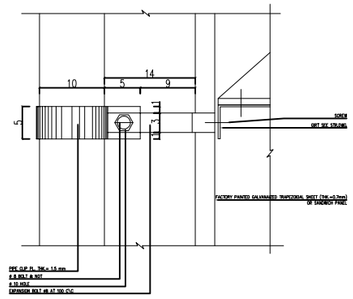

DETAIL 09–TYPICAL PIPE CLIP ON TRAPEZOIDAL SHEET
Sc:1/20

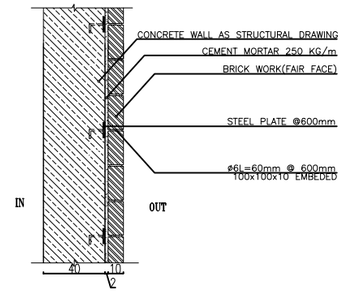

DETAIL 13– CONNECTING BRICK FACE TO CONCRETE WALL
Sc:1/20

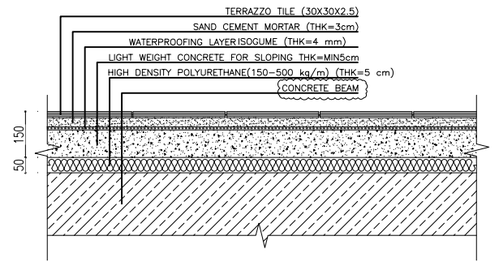

DETAIL 14 (ROOF)
Sc:1/10

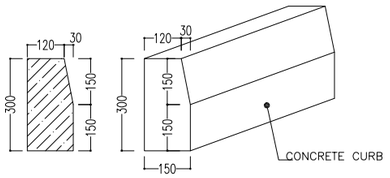

DETAIL 11CONCRETE CURB
Sc:1/10

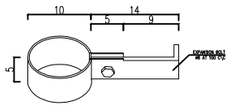

DETAIL 09–TYPICAL PIPE CLIP ON TRAPEZOIDAL SHEET
Sc:1/20

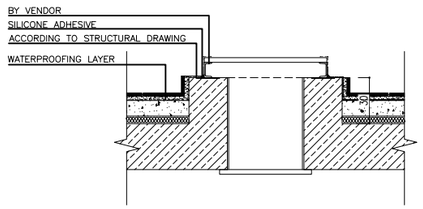

DETAIL 15 (VENTILATION FAN ON ROOF)
Sc:1/20

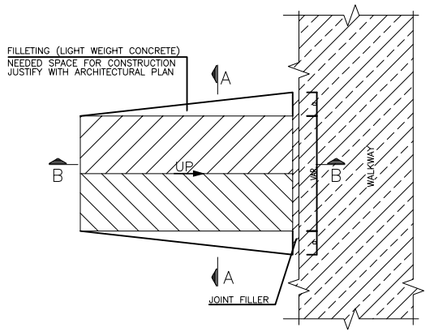

DETAIL 12–RAMP
Sc:1/20

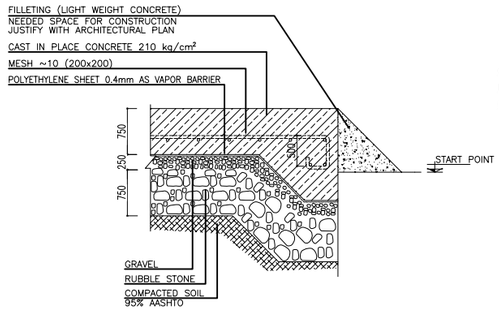

A
SC.1:10

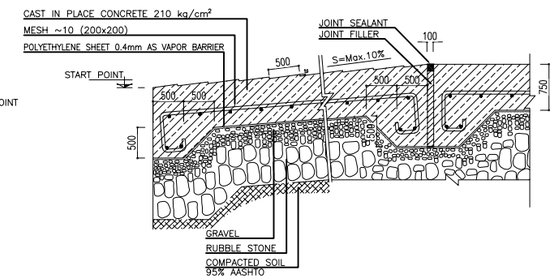

B
SC.1:10

NOTES

1. ALL DIMENSIONS ARE IN CENTIMETER & ALL ELEVATIONS ARE IN METER.
2. ALL DIMENSIONS AND ELEVATIONS SHALL BE CHECKED BY THE CONTRACTOR PRIOR TO CONSTRUCTION.
3. CONTRACTOR SHALL COMPARE ALL ARCHITECTURAL, MECHANICAL, ELECTRICAL, PIPING AND STRUCTURAL DRAWINGS AND IN CASE OF ANY CONFLICTS OR DISCREPANCY, INFORM THE ENGINEER.
4. ALL MATERIALS ARE SELECTED FROM THE HIGHEST QUALITY AND MUST BE APPROVED BY THE CLIENT.
5. ALL OPENINGS FOR PIPING/CABLING AND HVAC OPENINGS SHALL BE CONSIDERED AS PER RELATED DRAWINGS BEFORE CONSTRUCTION.
6. ARCHITECTURAL DETAIL DESIGN WILL BE REVISED BASED ON APPROVED STRUCTURAL DRAWINGS.
7. ELEVATION CODE : LOCAL ±0.0m CORRESPONDS TO GLOBAL +11.10m

LEGEND

LEAN CONCRETE
REINFORCED CONCRETE
PRESSED BRICK
STONE
EXPANSION JOINT FILLER (PLASTOFOAM)
TERRAZZO TILES FOR ROOF – 30x30cm
BLOCKAGE

F.FL.	FINISHED FLOOR	B.O.P.	BOTTOM OF PIT
T.O.WA	TOP OF WAIKWAY	F.G.L.	FINISH GRADING LEVEL
T.O.P.	TOP OF PARAPET	T.O.T.	TOP OF TRENCH
T.O.FOU.	TOP OF FOUNDATION	C.O.S.	CENTER OF SLEEVE
M.D	METAL DOOR	B.O.S.	BOTTOM OF SLEEVE
T.O.R.	TOP OF ROOF	B.O.O.	BOTTOM OF OPENING
T.O.D.	TOP OF DOOR	B.O.T.	BOTTOM OF TRENCH
B.O.Ca.	BOTTOM OF CAGE	B.O.P.	BOTTOM OF PIT
T.O.Ca.	TOP OF CAGE	R.H.P.	ROOF HIGHEST POINT
B.O.G.	BOTTOM OF GUTTER	R.L.P.	ROOF LOWEST POINT
T.O.Ca.	TOP OF CAGE	N.G.R.	NEUTRAL GROUND RESISTOR
M.D.	METAL DOOR	B.P.D.	BLAST–PROOF DOOR
T.O.S.	TOP OF SLAB	F.D.	FENCE DOOR

REFERENCE DRAWING	DRG. No.
STANDARD DRAWING FOR ARCHITECTURAL DETAILS	BK-GNRAL-PEDCO-000-AR-DW-0001
SITE SEWARAGE SYSTEM LAYOUT & DETAILS	BK-GCS-PEDCO-120-CV-PY-0001
CABLE TRENCH AND DUCT BANK LAYOUT	BK-GCS-PEDCO-120-CV-PY-0002
ELECTRICAL CABLE ROUTE & SECTION LAYOUT FOR BUILDING & SHELTER	BK-GCS-PEDCO-120-EL-PY-0006
FOUNDATION DRAWING FOR EXTENSION OF EXISTING ELECT. BUILDING	BK-GCS-PEDCO-120-ST-DW-0063
STRUCTURAL DRAWING FOR EXTENSION OF EXISTING ELECT. BUILDING	BK-GCS-PEDCO-120-ST-DW-0064
STANDARD DETAILS FOR LADDER & SAFETY CAGE	BK-GNRAL-PEDCO-000-ST-DW-0009
ELECTRICAL EQUIPMENT ARRANGEMENT LAYOUT FOR BUILDING	BK-GCS-PEDCO-120-ST-EL-PY-0006
UNIT PLOT PLAN DRAWING	BK-GCS-PEDCO-120-PI-PY-0001

KEY PLAN

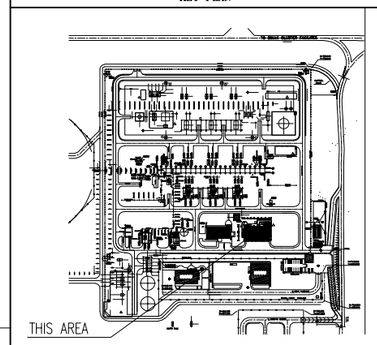

REV.	DATE	P.O.I.S	PREP.	CHK.	APP.	AUT.
D07	MAR.2024	AFC	R.BERLOUIE	M.FAKHARIAN	S.Paramarzpour	**.**
D06	NOV.2023	AFC	R.BERLOUIE	M.FAKHARIAN	S.Paramarzpour	**.**
D05	SEP.2023	AFC	R.BERLOUIE	M.FAKHARIAN	A.M.MOHSENI	**.**
D04	AUG.2023	IFA	R.BERLOUIE	M.FAKHARIAN	A.M.MOHSENI	**.**
D03	MAY.2023	IFA	R.BERLOUIE	M.FAKHARIAN	A.M.MOHSENI	**.**
D02	AUG.2022	IFA	R.BERLOUIE	M.FAKHARIAN	M.MEHRSHAD	**.**
D01	APR.2022	IFA	R.BERLOUIE	M.FAKHARIAN	M.MEHRSHAD	**.**
D00	JAN.2022	IFC	R.BERLOUIE	M.FAKHARIAN	M.MEHRSHAD	**.**

REV.	DESCRIPTION	CHECKED BY	CHECKED DATE	REV. APPR. BY	REV. APPR. DATE
***	**********	**.**	****.****	**.**	****.****

PROJECT NAME: BINAK OILFIELD DEVELOPMENT/SURFACE FACILITIES GAS COMPRESSOR STATION

PROJECT NO.: 971020

EPC CONTRACTOR: HIRGAN ENERGY – DESIGN & INSPECTION COMPANIES

EPD/EPC CONTRACTOR (GC): PETROIRAN DEVELOPMENT COMPANY (PEDCO)

DRAWING TITLE: ARCHITECTURAL DETAIL DRAWING FOR EXTENSION OF EXISTING ELECT. BUILDING
DETAILS

SCALE	SIZE	DRAWING NO.	SHEET NO.	REV.
AS SHOWN	A1	BK-GCS-PEDCO-120-AR-DW-0002	15 OF 15	D07

اصل و کلیه نسخ این نقشه و حق اقتباس متعلق به شرکت ملی مناطق نفت خیز جنوب میباشد.

THE ORIGINAL AND ALL COPIES OF THIS DRAWING TOGETHER WITH THE COPYRIGHT THEREIN ARE THE SOLE PROPERTY OF N.I.S.O.C./ FIELDS

BINAK OILFIELD DEVELOPMENT
SURFACE FACILITIES
GAS COMPRESSOR STATION

DATE	SCALE	DRAWING BY	CHECKED BY	PROJECT ENG.

NO CONSTRUCTION PERMITTED UNLESS DRAWING APPROVED

APPROVED FOR CONSTRUCTION BY: DATE:

BUDGET REF.	LOCATION	SIZE	CLASS	SERIAL NO.	SHEET	REVISION
053-073-9184	F	4	B	709100	15 OF 15	D07