طرح نگهداشت و افزایش تولید ۲۷ مخزن

CALCULATION NOTE FOR FIRE WATER PUMP SHELTER

نگهداشت و افزایش تولید میدان نفتی بینک

D02	APR.2024	AFD	R.Berlouie	M.Fakharian	S.Faramarzpour	
D01	NOV.2023	IFA	R.Berlouie	M.Fakharian	S.Faramarzpour	
D00	AUG.2023	IFC	R.Berlouie	M.Fakharian	A.M.Mohseni	
Rev.	**Date**	**Purpose of Issue/Status**	**Prepared by:**	**Checked by:**	**Approved by:**	**CLIENT Approval**

Class:2 **COMPANY Doc. Number:F0Z-709124**

Status:

IDC: Inter-Discipline Check
IFC: Issued For Comment
IFA: Issued For Approval
AFD: Approved For Design
AFC: Approved For Construction
AFP: Approved For Purchase
AFQ: Approved For Quotation
IFI: Issued For Information
AB-R: As-Built for CLIENT Review
AB-A: As-Built –Approved

REVISION RECORD SHEET

PAGE	D00	D01	D02	D03	D04
1	X	X	X		
2	X	X	X		
3	X	X			
4	X				
5	X				
6	X	X			
7	X				
8	X				
9	X				
10	X				
11	X				
12	X				
13	X				
14	X				
15	X				
16	X				
17	X				
18	X				
19	X				
20	X				
21	X				
22	X				
23	X				
24	X				
25	X	X			
26	X	X			
27	X	X			
28	X				
29	X				
30	X				
31	X				
32	X				
33	X				
34	X	X			
35	X	X			
36	X				
37	X				
38	X				
39	X				
40	X				
41	X				
42	X				
43	X				
44	X				
45	X				
46	X				
47	X				
48	X				
49	X				
50	X	X			
51	X	X			
52	X	X			
53	X	X			
54	X	X			
55	X	X			
56	X	X			
57	X	X			
58	X	X			
59	X	X			
60	X	X			
61		X			
62		X			
63		X			
64		X			
65		X			

PAGE	D00	D01	D02	D03	D04
66		X			
67		X			
68		X			
69		X			
70		X			
71					
72					
73					
74					
75					
76					
77					
78					
79					
80					
81					
82					
83					
84					
85					
86					
87					
88					
89					
90					
91					
92					
93					
94					
95					
96					
97					
98					
99					
100					
101					
102					
103					
104					
105					
106					
107					
108					
109					
110					
111					
112					
113					
114					
115					
116					
117					
118					
119					
120					
121					
122					
123					
124					
125					
126					
127					
128					
129					
130					

CONTENTS

1.0 INTRODUCTION 5
2.0 SCOPE 5
3.0 NORMATIVE REFERENCE 5
3.1 LOCAL CODES AND STANDARDS 5
3.2 INTERNATIONAL CODES AND STANDARDS 5
3.3 THE PROJECT DOCUMENTS 6
4.0 MATERIAL PROPERTIES 6
5.0 STRUCTURE 'S SYSTEMS 6
6.0 DESIGN LOAD 7
6.1 DEAD LOAD 7
6.2 LIVE LOADS 8
6.3 SNOW LOADS 9
6.4 -UNBALANCED SNOW LOADS 10
6.5 SEISMIC LOADS 11
6.6 CRANE LOAD 15
6.7 WIND LOADS 15
6.8 THERMAL LOAD OF STRUCTURE (TLST) 20
7.0 SAP LOADING TABLE 20
8.0 LOAD COMBINATIONS 22
9.0 STRUCTURE ANALYSIS AND DESIGN 23
9.1 ANALYSIS 23
9.2 FLEXTURAL DESIGN OF CRANE BEAM 24
9.3 DEFLECTION CONTROL : 25
9.4 BEAM LATERAL RESTRAINT 26
9.5 DRIFT CONTROL : 27
10.0STRUCTURAL DESIGN RESULTS 35
10.1 GRAPHICAL OUTPUT 35
11.0STRUCTURECONNECTIONS 36
11.1 DESCRIPTION OF DESIGN PROCEDURE & PARAMETERS 36
11.2 PURLIN DESIGN 44
11.2.1. PROPERTY OF PURLIN(Z180x2.5) 44
11.3 ROOF BRACING DESIGN 47
11.4 BASE PLATE 50
11.5 GENERAL REQUIREMENTS OF EMBEDMENT IN CONCRETE: 52
12.0FOUNDATION DESIGN 54

12.1 SOIL PRESSURE AND SETTLEMENT 55
12.2 DESIGN 56
12.3 FOUNDATION DESIGN CONTROL 57

1.0 INTRODUCTION

Binak oilfield in Bushehr province is a part of the southern oilfields of Iran, is located 20 km northwest of Genaveh city.

With the aim of increasing production of oil from Binak oilfield, an EPC/EPD Project has been defined by NIOC/NISOC and awarded to Petro Iran Development Company (PEDCO). Also PEDCO (as General Contractor) has assigned the EPC-packages of the Project to "Hirgan Energy - Design and Inspection" JV.

2.0 SCOPE

This report covers the structure & foundation calculation report of the “Fire Water Pump Shelter ”. The structure& foundation modelled by “SAP” software.

3.0 NORMATIVE REFERENCE

3.1 Local Codes and Standards

- INBC Part 6 “Iranian National Building Code
- INBC Part 7 “Iranian National Building Code
- INBC Part 9 “Iranian National Building Code
- INBC Part 10 “Iranian National Building Code
- Iranian Seismic Design Code for Petroleum Facilities(3rd edition)
- Iranian Code Of Practice For Seismic Resistant Design Of Building (Standard No.2800 4th edition)

3.2 International Codes and Standards

- ASCE 7-10 “Minimum Design Loads and Associated Criteria for Buildings and Other Structures-American Society of Civil Engineers”.
- ACI 318. “Building Code Requirements for Reinforced Concrete”, American Concrete Institute.
- AISC 358 “Prequalified Connections for Special and Intermediate Steel Moment Frames for Seismic Applications.” American Institute of Steel Construction, Inc.
- AISC 360 - “Specification for Structural Steel Buildings”. American Institute of Steel Construction, Inc.

3.3 The Project Documents

- BK-GNRAL-PEDCO-000-ST-SP-0001 SPECIFICATION FOR CONCRETE WORK
- BK-GCS-PEDCO-120-ST-DW-0066 STRUCTURAL DRAWING FOR FIRE WATER PUMP SHELTER
- BK-GCS-PEDCO-120-ST-DW-0065 FOUNDATION DRAWING FOR FIRE WATER PUMP SHELTER
- BK-GNRAL-PEDCO-000-ST-DC-0001 STRUCTURAL DESIGN CRITERIA
- BK-GNRAL-PEDCO-000-ST-SP-0005 SPECIFICATION FOR ERECTION OF STEEL STRUCTURES
- BK-GNRAL-PEDCO-000-ST-SP-0003 SPECIFICATION FOR FABRICATION OF STEEL STRUCTURES

4.0 MATERIAL PROPERTIES

Material properties are delivered in the following table.

TABLE 1 -MATERIAL PROPERTIES

Foundation Concrete	F'c = 30 Mpa(28- day cylindrical sample)
Long. reinforcement bar	Fy = 400 Mpa(AIII)
Trans. reinforcement bar	Fy = 400 Mpa(AIII)
Bolt Type	HV 8.8
Electrode Type	E 70
Structural Steel shapes and plates:	St 37(Fy=2400kg/cm2 , Fu=3700 kg/cm2)

5.0 STRUCTURE ‘S SYSTEMS

The Structure’s System is OMF in X direction and OCBF system in Y direction .Seismic Parameters according to Iranian Seismic Design code(Code No.038) listed at below table.

TABLE 2 –STRUCTURAL SYSTEM

	SYSTEM	R	OMEGA	CD
Y DIR	OMF	3.5	3	3
X DIR	OCBF	3.25	2	3.25

6.0 DESIGN LOAD

6.1 Dead load

Dead loads include the self-weight of the structure and all the permanent equipment which are supported by the structures

Corogated sheet : $8\ \mathrm{kg/m^2}$

Z Purlin : $8\ \mathrm{kg/m^2}$

Insulation : $10\ \mathrm{kg/m^2}$ Roof weight is assigned in software approximately 50 kg/m2.

- At frame 1&5 : $50 \times 2 = 100\ kg/m$
- At frame 2&4 : $50 \times 5 = 250\ kg/m$
- At frame 3 : $50 \times 6 = 300\ kg/m$

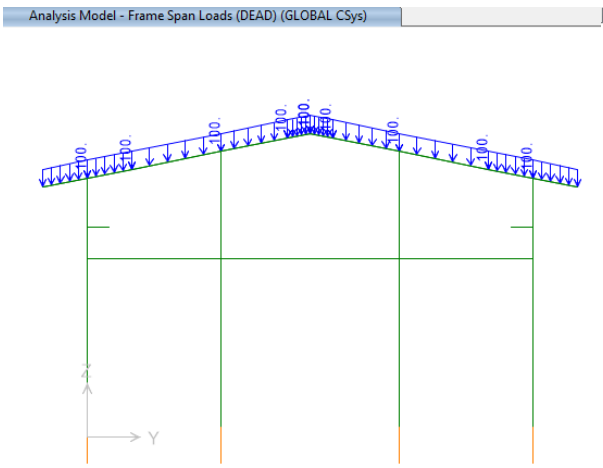

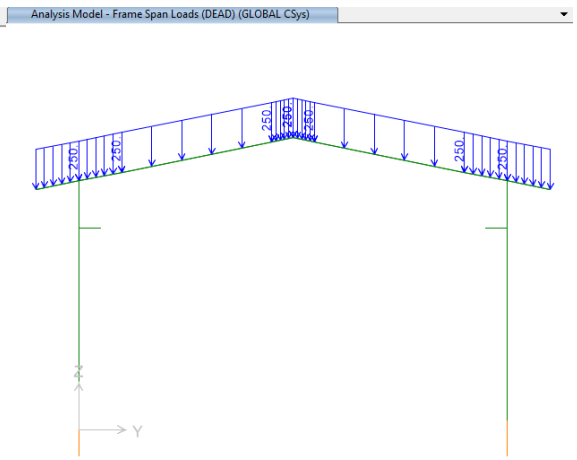

Figure 1-applied Dead load on frame(1&5) (100kg/m) **Figure 2-applied Dead load on frame 2&4(250 kg/m)**

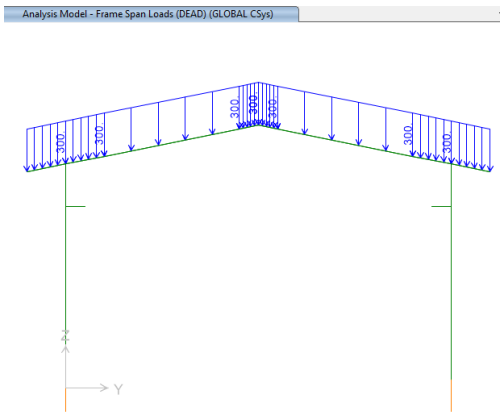

Figure 3-applied Dead load on frame 3(300 kg/m)

6.2 Live Loads

The design live load on an area shall be defined as the weight of all movable loads, including personnel, tools, and parts of dismantled equipment, cranes, hoist, and temporarily stored materials.

According to Civil Design Live load in slop roof is 100kg/m2 .

- At frame 1&5 : $100 \times 2 = 200\ kg/m$
- At frame 2&4 : $100 \times 5 = 500\ kg/m$
- At frame 3 : $100 \times 6 = 600\ kg/m$

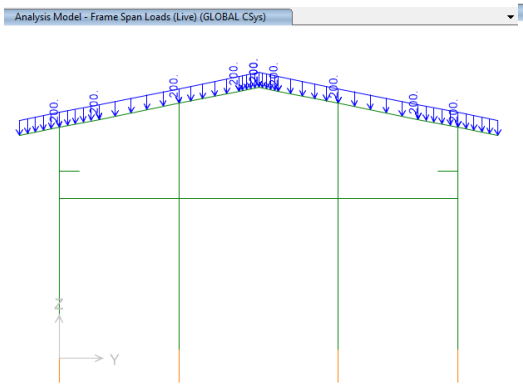

Figure 4-Applied live Load on frame 1&5 (200kg/m)

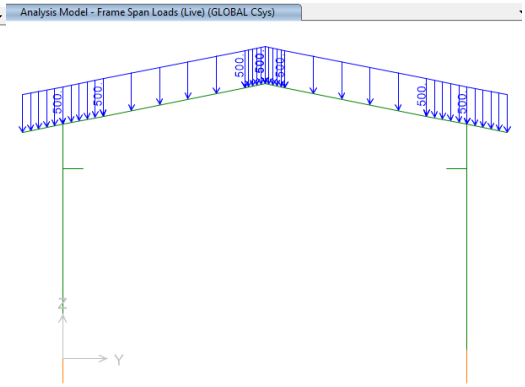

Figure 5-Applied live Load on frame 2&4 (500kg/m)

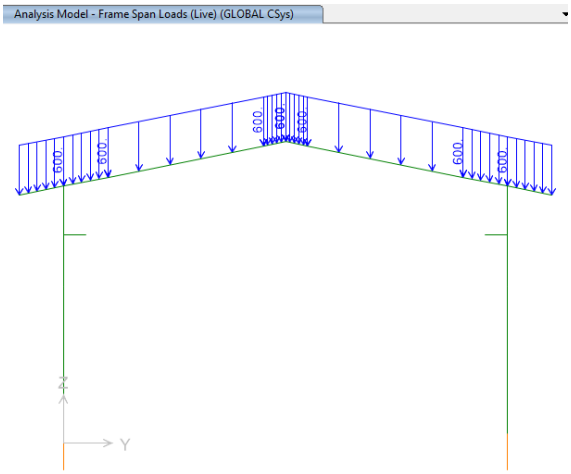

Figure6-Applied live Load on frame 3 (600kg/m)

6.3 SNOW LOADS

Snow load of this structure is calculated in accordance with Iranian National Building Code No.6 Latest edition.. Parameters which are used in calculation of snow force is presented in below:

$$P_r = P_s C_n C_h I_S C_s$$

Ps=25 kg/m2 , Is=1

Cs= 0.91 (slope 11.31°)=1-$\frac{\alpha-\alpha_0}{70-\alpha_0} = 1 - \frac{11-5}{70-5} = 0.902$

Ch=1

Cn=0.8

$$P_r = P_s C_n C_h I_S C_s = 18.06 \frac{kg}{m2}$$

- At frame 1&5: $18.06 \times 2 = 36.12 \ kg/m$
- At frame 2&4 : $18.06 \times 5 = 90.3 \ kg/m$
- At frame 3 : $18.06 \times 6 = 108.36 \ kg/m$

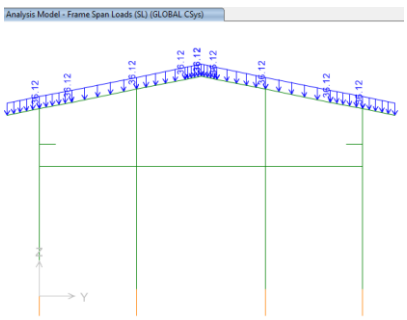

Figure 7-applied Snow load on ended axe(1&5) (36.12 kg/m)

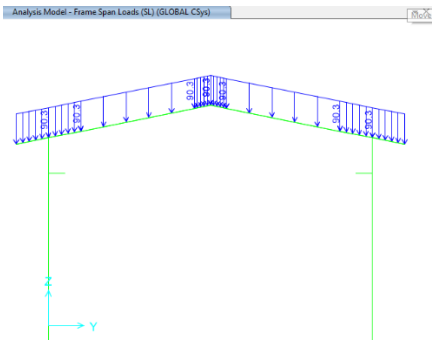

Figure 8-applied Snow load on middle axe 2,4(90.3 kg/m)

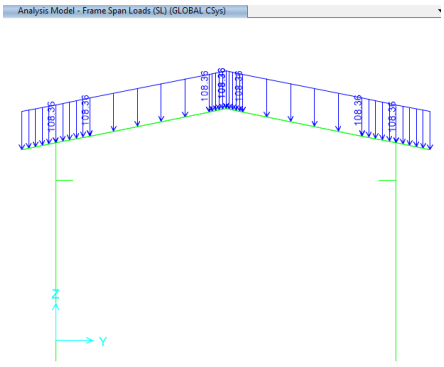

Figure9-applied Snow load on middle axe 3 (108.36 kg/m)

6.4 -UNBALANCED SNOW LOADS

According to Iranian National Building Code No.6 (latest edition)) Unbalanced snow load have been considered for roof slope between 4%~60%..in this structure Calculation of this load represents as below:

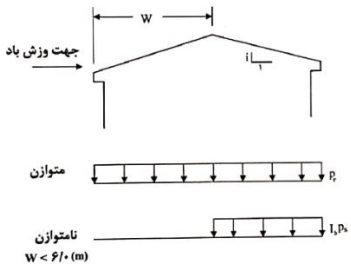

$$for\ lu < 6\ m \qquad P_r = I_s P_g = 25\frac{kg}{m2}$$

- At frame 1&5 : $25 \times 2 = 50 \quad kg/m$
- At frame 2&4 : $25 \times 5 = 125 \quad kg/m$
- At frame 3 : $25 \times 6 = 150 \quad kg/m$

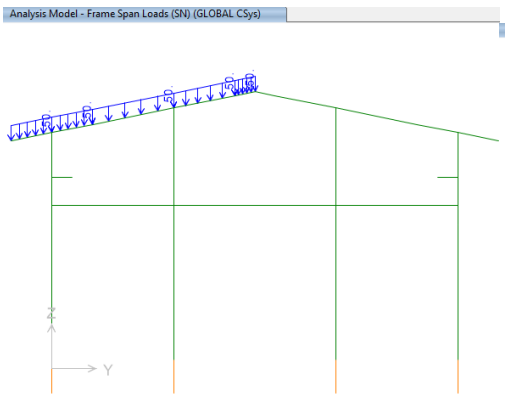

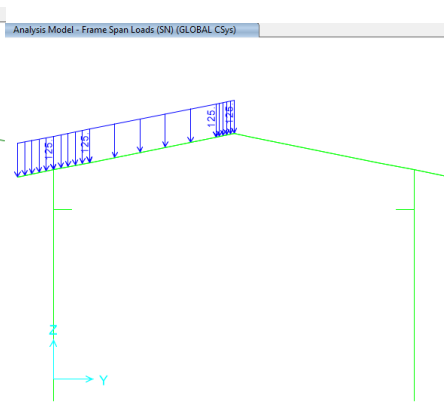

Figure 10- Unbalanced Snow Load f 1&3(SN : 50 kg/m) Figure 11- Unbalanced Snow Load f 1&3(SN : 125 kg/m)

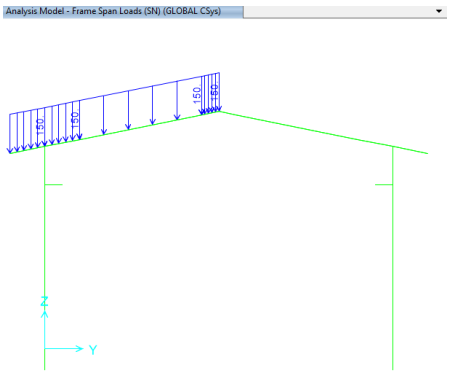

Figure12- Unbalanced Snow Load f 1&3(SN : 150kg/m)

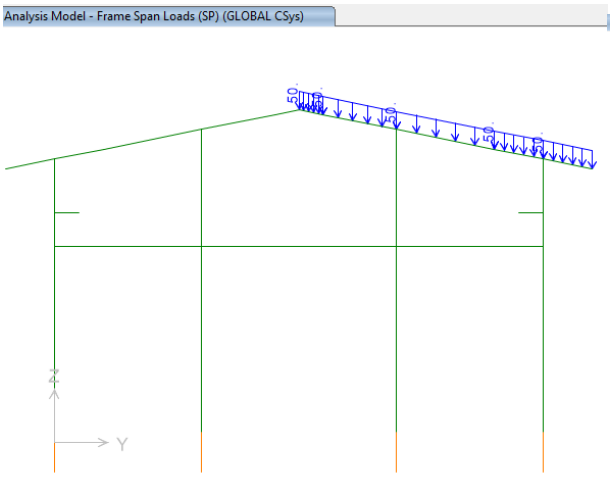

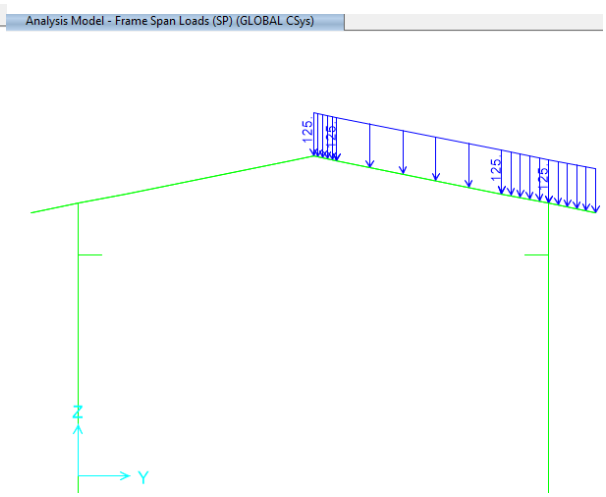

Figure 13- Unbalanced Snow Load f 1&3(SP : 50 kg/m) Figure 14- Unbalanced Snow Load f 1&3(SN : 125 kg/m)

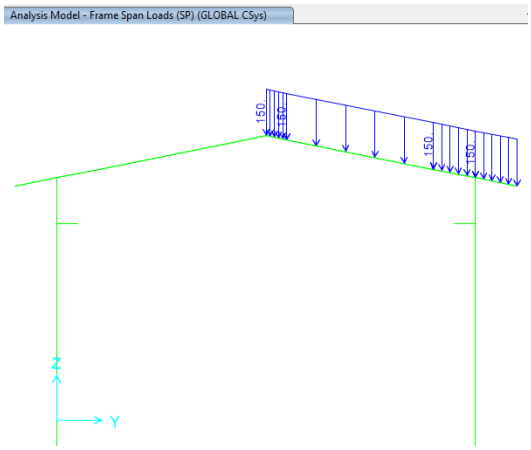

Figure 15- Unbalanced Snow Load f 1&3(SP : 150kg/m)

6.5 SEISMIC LOADS

All structures are in area with high risk zone of seismic and until finalizing of "Geotechnical Final Report" soil type consider is type II. Equivalent static method is used for calculation of seismic loads. Parameters which are used in calculation of earthquake force and seismic coefficient is presented in below.

$$V = C_s W$$

Where:

C_s = the seismic response coefficient from Equation below:

W = the effective seismic weight of the structure

$$C_s = \frac{S_a}{R/I_e}$$

Where:

S_a= mapped spectral response acceleration parameter (g), determined from hazard analysis. According to Iranian seismic design code for Petroleum facilities (3rd edition)

$$SDs = AB(0.2\text{sec}) = 0.75$$

$$S_{D1} = AB(1\text{sec}) = 0.375$$

R= the response modification factor for structure

I = the importance factor for structure:1.25

Seismic loads are calculated according to Iranian seismic design code

Soil Type : Type II

- **<u>For X direction</u>**

Parameter	X-Direction	Y-Direction
Importance factor, I_e	1.25	1.25
Structural system	OCBF	OMF
R	3.25	3.5
Ω	2	3
Cd	3.25	3
A	0.3	0.3
Soil Type	II	
T0(s)=0.2Sd1/Sds	0.1	0.1
Ts(s)=Sd1/Sds	0.5	0.5
S	1.5	1.5
S_0	1	1
S_{Ds}	0.75	0.75
S_{D1}	0.375	0.375
Ta = Calculated Period	$=0.05*(6.8)^{0.75} = 0.210$	$=0.072*(6.8)^{0.8} = 0.33$

Tm = Analytical Period	0.2264 (Mode 5)	0.904(Mode 1)
Ta=min(C_{Tu}(1.4) * Ta(Calculated Period),; ,, Ta(Analytical Period))	0.2264	0.462
k	1.00	1.00
S_a	0.75	0.75
$C_s = \frac{SaI}{Ru}$	0.288	0.2678

Modal Participating Mass Ratios

File View Edit Format-Filter-Sort Select Options

Units: As Noted

Filter:

OutputCase	StepType Text	StepNum Unitless	Period Sec	UX Unitless
MODAL	Mode	5	0.226422	0.68
MODAL	Mode	22	0.125589	0.08207
MODAL	Mode	6	0.213944	0.06005
MODAL	Mode	8	0.203632	0.01182
MODAL	Mode	11	0.197537	0.01149
MODAL	Mode	13	0.196352	0.01058

Figure 16- Period in x direction(Mode 5)

- **<u>For Y direction:</u>**

OMF system :

Rux=3.5

Omega=3

Cd=3

OutputCase	StepType Text	StepNum Unitless	Period Sec	UX Unitless	UY Unitless
MODAL	Mode	1	1.005129	0	0.904
MODAL	Mode	24	0.106216	7.494E-14	0.002051
MODAL	Mode	9	0.201126	8.621E-18	0.001262
MODAL	Mode	26	0.102848	2.725E-14	0.000219
MODAL	Mode	10	0.19886	1.138E-14	0.0001697

Figure 17- Period in y direction

According to Iranian seismic design code(code.038) section 4-6 ρ factor applied on Ey coefficient as follow:

C_{uy} =0.267×1.3=0.347

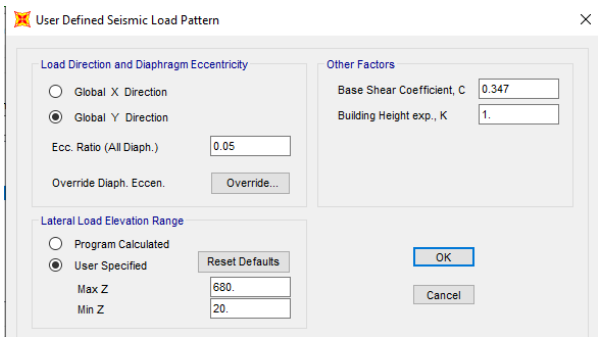

Figure 18- Period in y direction

- **<u>Vertical seismic component:</u>**

The vertical seismic load effect, E_v, shall be determined in accordance with the following Equation 6):

$E_v = 0.2S_{DS}D$

S_{DS} = Design, 5% damped, spectral response acceleration parameter (g) at short periods (0.2 sec).

D = effect of dead load

Loads case name: EQZ=0.2×0.75×W=0.15×W

-Ev : Vertical seismic load applied at model:

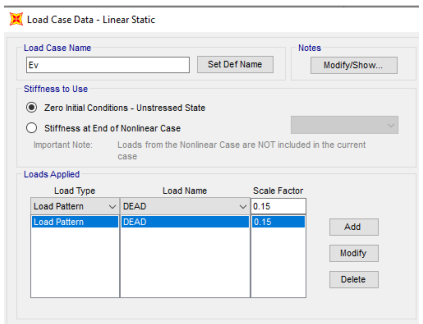

Figure 20-applied Ev load

Ev applied at model as a portion of dead load as above.

This Earthquake coefficient will apply in SAP2000 model to be multiplied in W (seismic weight of structure) that will compute automatically by SAP2000 software by "mass source multiplier" definition as below:

1Dead+Crv and+0.2 Live Load

6.6 CRANE LOAD

Distribution of crane load is as below :

Capacity : 5000 kg

At critical condition maximum force is 3300 and 750kg on each wheel of crane.

Kvs =1.25 (according to INBC no.6)

$case\ 1\ :\ F_T = 0.2 \times 3300 \times 1.25 = 825\ kg \quad F_l = 0.1 \times 3300 \times 1.25 = 412.5\ kg$

$case\ 2:\ F_T = 0.2 \times 750 \times 1.25 = 187.5kg \quad F_l = 0.1 \times 750 \times 1.25 = 93.75kg$

Mentioned load applied in two case (assumed critical condition on left & right side)

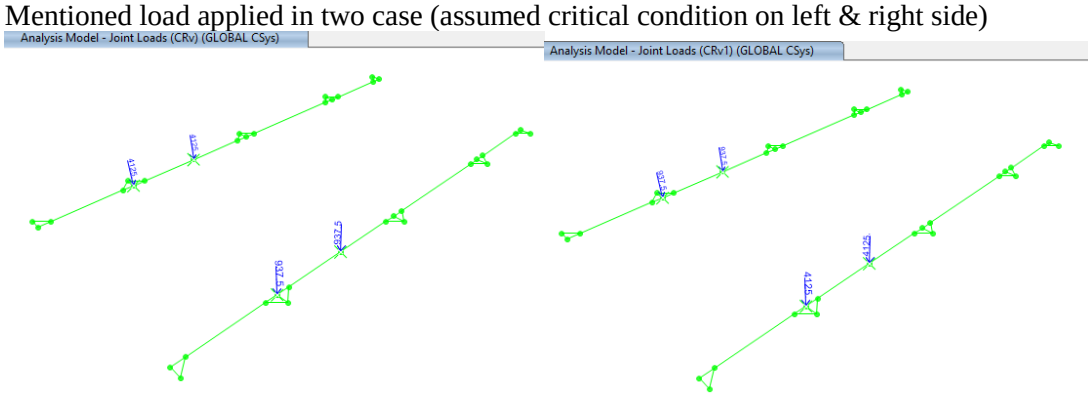

Figure21-applied CRv & CRv1 load

6.7 WIND LOADS

Wind loads are calculated according to Code No.6 and applied at model as below:

V=120 km/h(According to Iranian National Building Code No.6 last edition)

$q = 0.0000613V^2 \times 0.772 = 0.681$

$I = 1$

$width = 10m$

Mean $height = 6.3\ m$

C_e=0.917

Cgi=2

Roof slope=11.3 degree

سرعت باد (Km/h)	120	Km/h
فشار مبنای باد	0.681	kPa
ضریب اهمیت	1	جدول 6-1-2
عرض سوله (کمترین بعد افقی در پلان)=B	10	m
ارتفاع حداقل بام از سطح زمین (m)	5.8	m
ارتفاع حداکثر بام از سطح زمین (m)	6.8	m
نوع شیب بام (1. یکطرفه-2.دوطرفه)	2	
شیب بام	11°	Degree
ارتفاع متوسط بام=H (نباشد m کمتر از 6)	6.5	m
ارتفاع بازشو از سطح زمین	0	m
فاصله قاب ها (m)	5	m
نوع زمین	باز	بند 6-10-6-1
Ce	0.917	
Cgi	2	بند 6-10-6-4
Cpi (گروه 1، 2، یا 3)	3	6-10-9-6
Cpi (for Positive Internal Pressure)	0.7	
Cpi (for Negative Internal Pressure)	-0.7	
B/H=	1.538	
Z	1	صفحه 87 مبحث ششم (m)
y	6	صفحه 87 مبحث ششم (m)

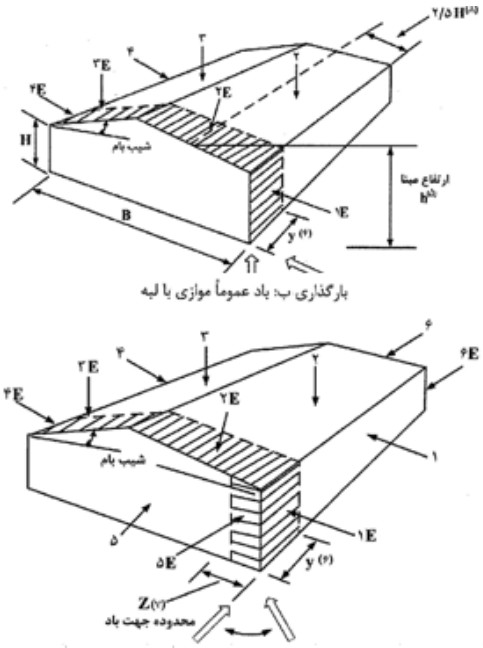

	1	1E	2	2E	3	3E	4	4E	5	5E	6	6E
شکل الف-CgCp	0.85	1.29	-1.3	-2	-0.78	-1.12	-0.65	-0.96				
P=I*q*Ce*CgCp (kPa)Cd	0.45	0.69	-0.69	-1.06	-0.41	-0.59	-0.35	-0.51				
P_{ip} - (Posetive) (kPa)	0.74	0.74	0.74	0.74	0.74	0.74	0.74	0.74				
P_{in} - (Negative) (kPa)	-0.74	-0.74	-0.74	-0.74	-0.74	-0.74	-0.74	-0.74				
$P+P_{ip}$ (kPa)	1.19	1.43	0.05	-0.32	0.33	0.15	0.40	0.23				
$P+P_{in}$(Kpa)	-0.29	-0.06	-1.43	-1.81	-1.16	-1.34	-1.09	-1.25				
kg/m2	119.49	142.86	5.31	-31.86	32.93	14.87	39.83	23.37				

	1	1E	2	2E	3	3E	4	4E	5	5E	6	6E
شکل ب-CgCp	-0.85	-0.9	-1.3	-2	-0.7	-1	-0.85	-0.9	0.75	1.15	-0.55	-0.8
P=I*q*Ce*CgCp (kPa)	-0.45	-0.48	-0.69	-1.06	-0.37	-0.53	-0.45	-0.48	0.40	0.61	-0.29	-0.42
P_{ip} - (Posetive) (kPa)	0.74	0.74	0.74	0.74	0.74	0.74	0.74	0.74	0.74	0.74	0.74	0.74
P_{in} - (Negative) (kPa)	-0.74	-0.74	-0.74	-0.74	-0.74	-0.74	-0.74	-0.74	-0.74	-0.74	-0.74	-0.74
$P+P_{ip}$ (kPa)	0.29	0.27	0.05	-0.32	0.37	0.21	0.29	0.27	1.14	1.35	0.45	0.32
$P+P_{in}$(Kpa)	-1.19	-1.22	-1.43	-1.81	-1.12	-1.27	-1.19	-1.22	-0.35	-0.13	-1.04	-1.17

Figure 22-Wind Load calculation (INBC No.6)

- For columns wind load applied as below (according to INBC no.6)

$$F_n = K \cdot C_{n\infty} \cdot q \cdot C_g \cdot C_e \cdot A \cdot I_w$$

$$F_t = K \cdot C_{t\infty} \cdot q \cdot C_g \cdot C_e \cdot A \cdot I_w$$

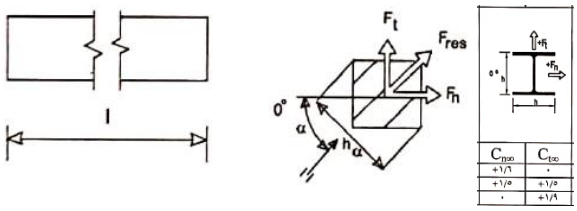

l/h_α	۵	۱۰	۲۰	۳۵	۵۰	۱۰۰	∞
k	۰/۶۰	۰/۶۵	۰/۷۵	۰/۸۵	۰/۹۰	۰/۹۵	۱/۰

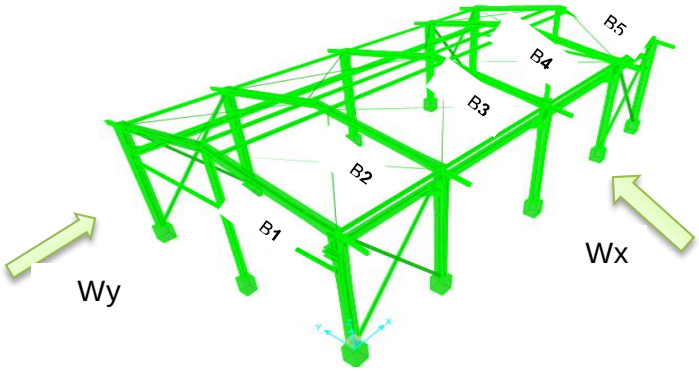

Figure 23-Wind Load Direction

For bottom part of columns:

$\alpha = 0 \qquad C_{n\infty} = 1.6$

$\alpha = 90 \qquad C_{t\infty} = 1.9$

$$F_n = F_x = K.C_{n\infty}.q.Cq.Ce.A.Iw$$

$$F_t = F_x = K.C_{t\infty}.q.Cq.Ce.A.Iw$$

$$F_n = F_x = 0.75 \times 1.6 \times 0.681 \times 2 \times 0.917 \times 0.3 \times 5.8 \times 1 = 2.6078\ KN = 260.78\ kg$$

$$Wx_n = F_x = 260.78\frac{100}{5.8} = 44.96\ kg/m$$

$$Wyn = F_y = 0.75 \times 1.9 \times 0.681 \times 2 \times 0.917 \times 0.3 \times 5.8 \times \frac{1}{5.8} = \frac{0.53KN}{m} = 53.39kg/m$$

- For beams wind load applied as below (according to INBC no.6)

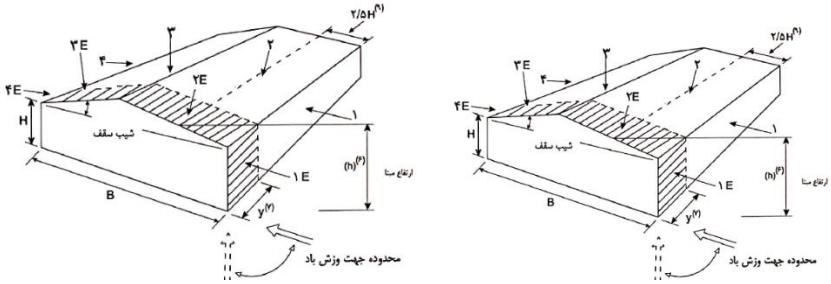

B1,B5 (2E zone) :

1: $Wxn = -31.86 \times 2 = -63.72\ \frac{kg}{m}$

2: $Wxp = -180.56 \times 2 = -361.12\ \frac{kg}{m}$

3: $Wyn = -31.86 \times 2 = -63.72 \frac{kg}{m}$

4: $Wyp = -180.56 \times 2 = -361.12\ \frac{kg}{m}$

B2,B4 (2 zone) :

1: $Wxn = -5.31 \times 5 = -26.55\ \frac{kg}{m}$

2: $Wxp = -143.39 \times 5 = -716.95\ \frac{kg}{m}$

3: $Wyn = -5.31 \times 5 = -26.55 \frac{kg}{m}$

4: $Wyp = -143.39 \times 5 = -716.95\ \frac{kg}{m}$

B3(2 zone) :

1: $Wxn = -5.31 \times 6 = -31.86\ \frac{kg}{m}$

2: $Wxp = -143.39 \times 6 = -860.34\ \frac{kg}{m}$

3: $Wyn = -5.31 \times 6 = -31.86 \frac{kg}{m}$

4: $Wyp = -143.39 \times 6 = -860.34\ \frac{kg}{m}$

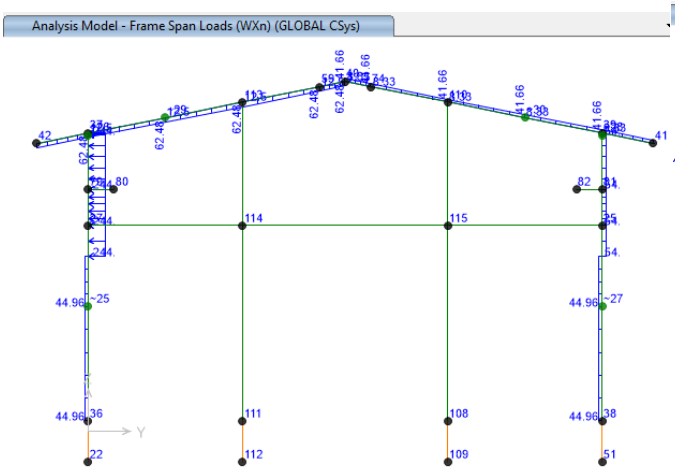

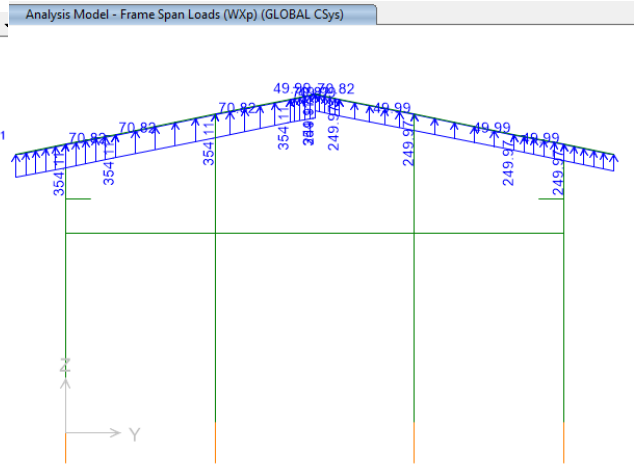

Figure 24-aplied Wind Load Applied frame A(Wxn:kg/m) Figure 25-aplied Wind Load Appliedframe A(Wxp:kg/m)

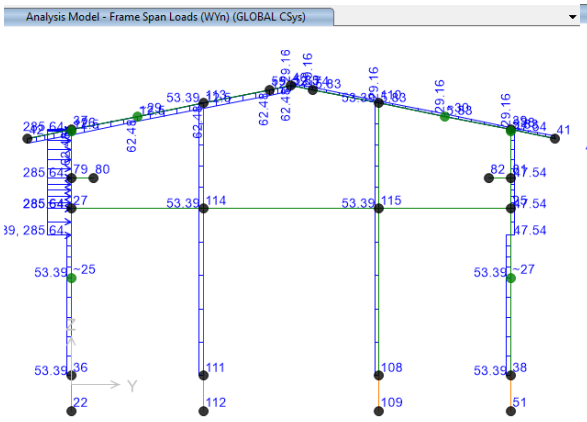

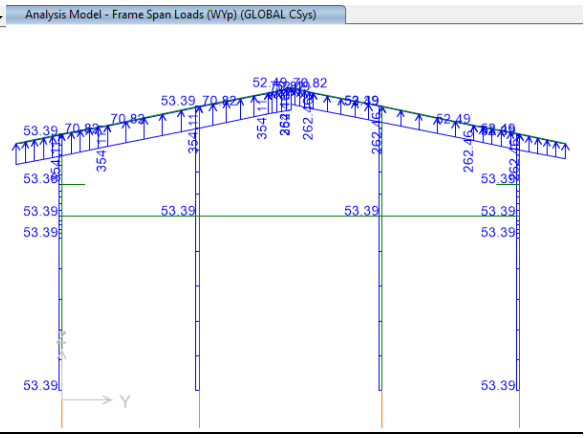

Figure 26-aplied Wind Load Applied frame A(Wyn :kg/m) Figure27-aplied Wind Load Applied frame A(Wyp :kg/m)

In mirror side

B1-1 (3E zone) : B5-1 (3E zone) :

1: $Wxn = 21.24 \times 2 = 42.48 \frac{kg}{m}$

2: $Wxp = -127.46 \times 2 = -254.922 \frac{kg}{m}$

3: $Wyn = 14.87 \times 2 = 29.74 \frac{kg}{m}$

4: $Wyp = -133.83 \times 2 = -267.66 \frac{kg}{m}$

B2-1,B4-1 (3 zone) :

1: $Wxn = 37.17 \times 5 = 185.85 \frac{kg}{m}$

2: $Wxp = -111.52 \times 5 = -557.6 \frac{kg}{m}$

3: $Wyn = -32.93 \times 5 = -164.65 \frac{kg}{m}$

4: $Wyp = -115.77 \times 5 = -578.85 \frac{kg}{m}$

B3-1 (2 zone) :

1: $Wxn = 37.17 \times 6 = 223.02 \frac{kg}{m}$

2: $Wxp = -111.52 \times 6 = -669.12 \frac{kg}{m}$

3: $Wyn = -32.93 \times 6 = -197.58 \frac{kg}{m}$

4: $Wyp = -115.77 \times 6 = -694.62 \frac{kg}{m}$

6.8 THERMAL LOAD OF STRUCTURE (TLST)

According to "Specification for Civil and Structural Design Criteria". Maximum temperature of 28 ºC shall be considered for computing the thermal load in all components of shelter.

7.0 SAP loading table

- **Load pattern:**

LoadPat	DesignType	SelfWtMult	AutoLoad
DEAD	Dead	1	
Live r	Roof Live	0	
EQx	Quake	0	USER COEFF
EQy	Quake	0	USER COEFF
WXp	Wind	0	None
WYp	Wind	0	None
SL	Snow	0	
Live	Live	0	
TL	Temperature	0	
WXn	Wind	0	None

WYn	Wind	0	None
SP	Snow	0	
SN	Snow	0	
WXp1	Wind	0	None
WYp1	Wind	0	None
WYn1	Wind	0	None
WXn1	Wind	0	None
CRv	Live	0	
FT	Live	0	
FL	Live	0	
CRv1	Live	0	
FT1	Live	0	
FL1	Live	0	
Ev	Dead	0	
TLst	Temperature	0	
DL empty	Dead	0	
LLop	Live	0	
FRx	Other	0	
FRy	Other	0	
ML	Other	0	
Test	Dead	0	
ER	Other	0	
Soil	Dead	0	
Notionalx(DL)	Notional	0	
Notionaly(DL)	Notional	0	
Notionalx(LL)	Notional	0	
Notionaly(LL)	Notional	0	
Notionalx(Lr)	Notional	0	
Notionaly(Lr)	Notional	0	
Notionalx(Lop)	Notional	0	
Notionaly(Lop)	Notional	0	
Notionalx(Test)	Notional	0	
Notionaly(Test)	Notional	0	
Notionalx(DLempty)	Notional	0	
Notionaly(DLempty)	Notional	0	
Notionalx(CR)	Notional	0	
Notionaly(CR)	Notional	0	
Notionalx(CR1)	Notional	0	
Notionaly(CR1)	Notional	0	

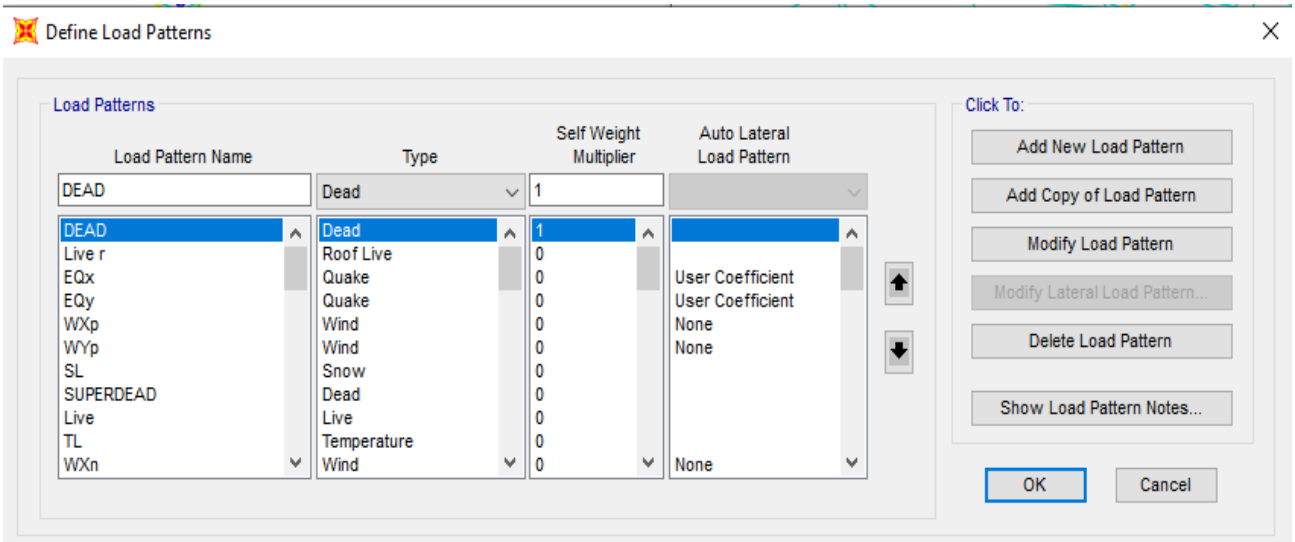

8.0 Load combinations

According to code INBC No.6 structures, components, and foundations shall be designed, so that their design strength equals or exceeds that effect of factored loads in the following combination:

- 1.4(D)
- (1.2D) +1.6(L)+0.5(Lr/S/R)
- 1.2D+1.6(Lr/S/R) + (L/0.5W)
- 1.2D+1.0(W) + L+.5(Lr/S)
- 1.2D+1.0E+L+0.2S
- 0.9D+1.0W
- 0.9D+1.0E

Load listed herein shall be considered to act in the following combinations; whichever produces the most unfavorable effect considering soil reactions.

- *D*
- *D+L*
- *D+(Lr/S/R)*
- *D+0.75(L)+0.75(Lr/R/S)*
- *D+(0.6W or 0.7E)*
- *D+0.75L+0.75(0.6W)+0.75(Lr/S/R)*
- *D+0.75L+0.75(0.7E)+0.75S*
- *0.6D+0.6W*
- *0.6D+0.7E*

9.0 STRUCTURE ANALYSIS AND DESIGN

9.1 ANALYSIS

Structural analysis is done by SAP2000 software. In model loads are applied, some graphical outputs from model are shown as follows.

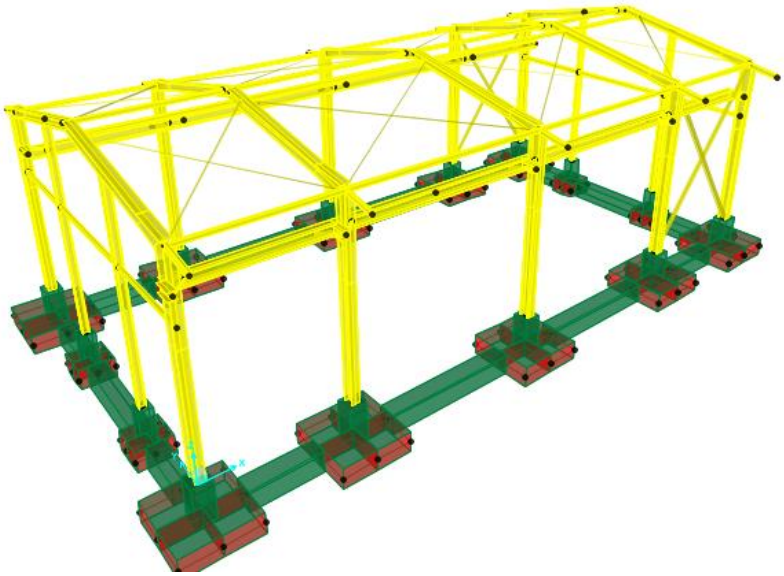

Figure 28-3D VIEW OF SAP MODEL

:

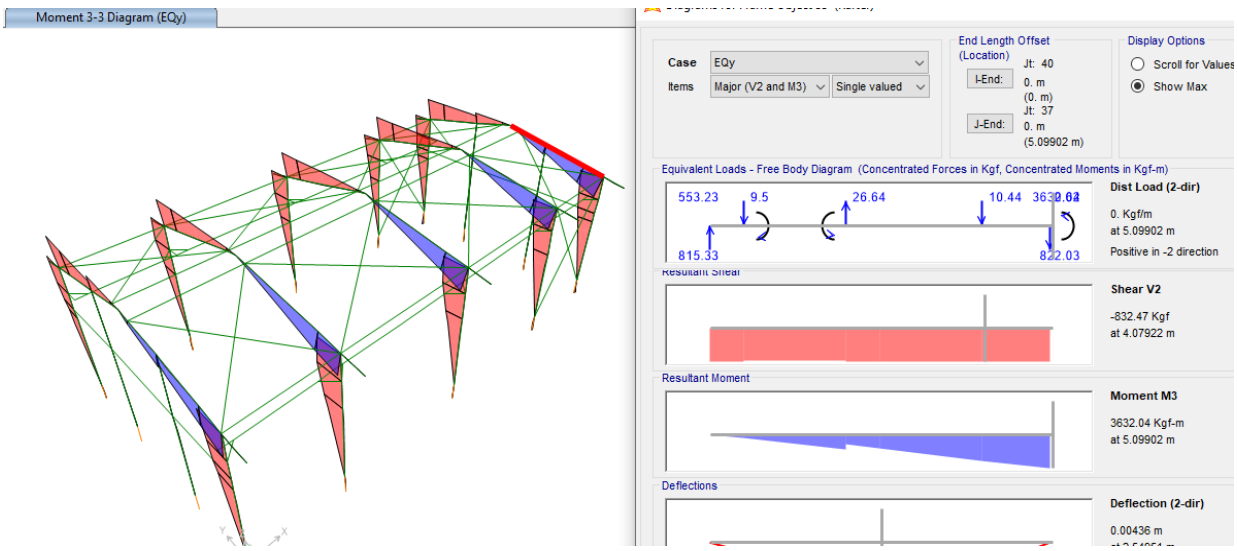

Figure 29: MOMENT 3-3 UNDER EY LOAD

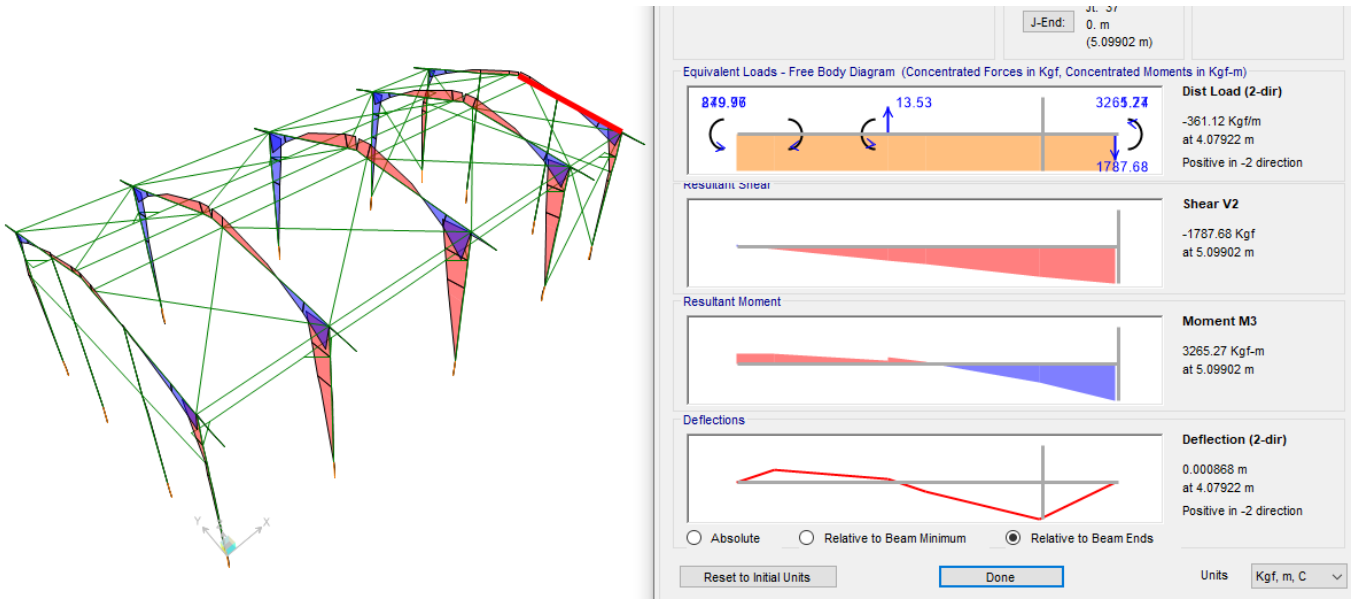

Figure 30: MOMENT 3-3 WY LOAD

9.2 FLEXTURAL DESIGN OF CRANE BEAM

According to below output from sap software maximum crane beam moment under critical load combination is 452696.49 kg.cm :

$$\emptyset Mn = 0.9 \times Z \times Fy = 0.9 \times 2400 \times 1620 = 3499200\ kg.cm$$

$$M_u = 1277049.65.cm$$

$$S = \frac{1277049.65}{3499200} = 0.36 \quad OK$$

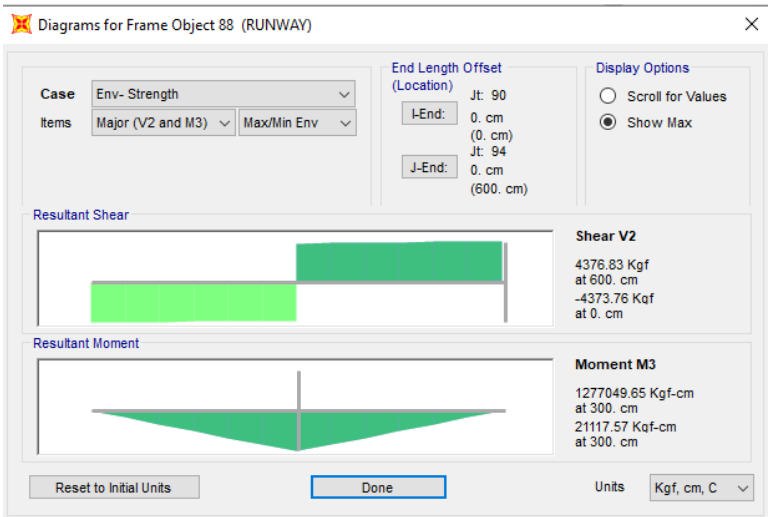

Figure 31: MOMENT 3-3 CRITICALLOAD COMBINATION ON CRANE BEAM

9.3 DEFLECTION CONTROL :

Maximum beam deflection under crane live load is :

$$\delta = \frac{PL^3}{48EI} = \frac{7500\times600\text{^}3}{48\times2.1\times10^6\times26916.083} = 0.597 \text{ cm} < 0.60 \text{ cm OK}$$

$$allowable\ Drift\ \ according\ to\ Code\ No.325\ :\ \frac{L}{1000} = \frac{600}{1000} = 0.60\ cm$$

4-Crane's runway beams (vertical due to max. wheel loads):	
Monorail /Hoist Beams	L/600
Electric crane of 60m/min. and below in travelling speed	L/600
Electric crane of 90m/min. and below in travelling speed	L/800
Electric crane of above 90m/min in travelling speed	L/1000

$$allowable\ Drift\ \ according\ to\ civil\ dead\ structural\ design\ criteria\ :\frac{L}{600} = \frac{600}{600} = 1cm$$

9.4 RAFTER BEAM DEFLECTION

Maximum Rafter beam deflection under D+L load combination is as below:

$$allowable\ Drift\ \ according\ to\ civil\ deand\ structural\ design\ criteria\ :\frac{L}{240} = \frac{1000}{240} = 4.16cm$$

TABLE: Joint Displacements					
Joint	OutputCase	CaseType	U3	U allowable	check
Text	Text	Text	cm	cm	
40	Rafter Deflection	Combination	-0.694232	-4.167	ok

Item	Allowable Deflection
1-purlin and girt of sloped roofs	L/200
2-floor beams supporting equipment for natural operating load *	L/400
3-piperack beams for normal operating load	L/300
4-Crane's runway beams (vertical due to max. wheel loads):	
Monorail /Hoist Beams	L/600
Electric crane of 60m/min. and below in travelling speed	L/600
Electric crane of 90m/min. and below in travelling speed	L/800
Electric crane of above 90m/min in travelling speed	L/1000
5-Cantilever Beams with no equipment	L/150
6-Cantilever Beams with equipment	L/300
7- Beams with live loads only	L/360
8- Beams with Live plus Dead loads	L/240

9.5 BEAM LATERAL RESTRAINT

Beam lateral restraint should be designed for 0.02 of compressive flange capacity.

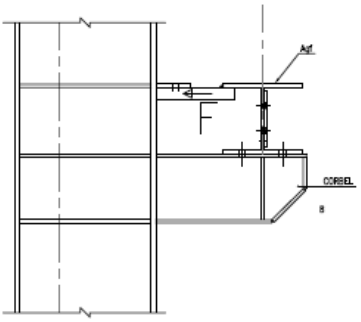

$F = 0.02Agf \times Fy = 0.02 \times 25 \times 1.5 \times 2400 = 1800kg$ >1591.97 kg OK

TABLE: Element Forces - Frames					
Frame	Station	OutputCase	CaseType	StepType	P
Text	cm	Text	Text	Text	Kgf
80	0	Env- Strength	Combination	Max	682.98
80	50	Env- Strength	Combination	Max	683.02
80	0	Env- Strength	Combination	Min	-1591.97
80	50	Env- Strength	Combination	Min	-1591.92
82	0	Env- Strength	Combination	Max	1959.33
82	50	Env- Strength	Combination	Max	1959.38
82	0	Env- Strength	Combination	Min	-688.78
82	50	Env- Strength	Combination	Min	-688.74
				P=	-1591.97

9.6 DRIFT CONTROL :

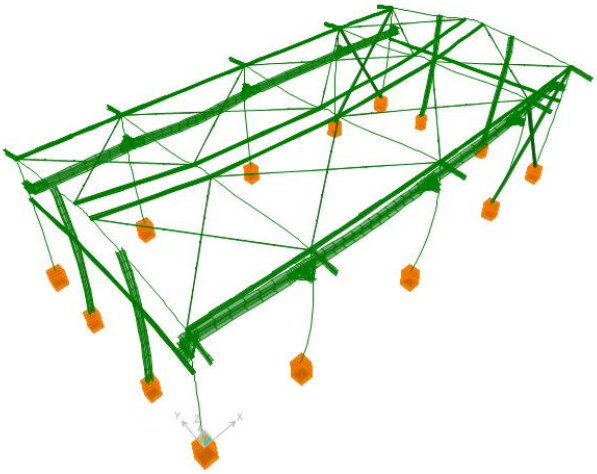

FIGURE 32: Deformed shape

Maximum displacement according to above output from sap model under critical service load combination is about 1.89 cm which is less than allowable drift.

$$allowable\ drift\ is\ \frac{680-20}{200} = 3.3cm$$

According to "Civil & Structural Design Criteria", horizontal displacements shall not exceed H/200.

The maximum displacement is less than H/200, so the displacement values are acceptable.

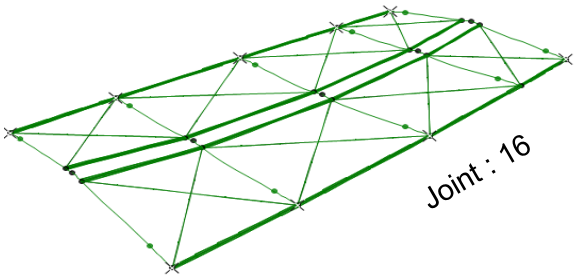

TABLE: Joint Displacements					
Joint	OutputCase	CaseType	U2	Allowable	
Text	Text	Text	cm	H/200(cm)	check
16	WYp	LinStatic	1.214865	3.3	ok
16	WYn	LinStatic	0.791405	3.3	ok
16	WYp1	LinStatic	0	3.3	ok
16	WYn1	LinStatic	0	3.3	ok
16	Drift Y1(INBC no.6)-NL	NonStatic	0.313884	3.3	ok
16	Drift Y1(INBC no.6)-NL	NonStatic	0.313884	3.3	ok
16	Drift Y2(INBC no.6)-NL	NonStatic	-1.328419	3.3	ok

16	Drift Y2(INBC no.6)-NL	NonStatic	-1.328419	3.3	ok
16	Drift Y3(INBC no.6)-NL	NonStatic	-0.510881	3.3	ok
16	Drift Y3(INBC no.6)-NL	NonStatic	-0.510881	3.3	ok
16	Drift Y4(INBC no.6)-NL	NonStatic	-0.510881	3.3	ok
16	Drift Y4(INBC no.6)-NL	NonStatic	-0.510881	3.3	ok
16	Drift Y5(INBC no.6)-NL	NonStatic	0.718991	3.3	ok
16	Drift Y5(INBC no.6)-NL	NonStatic	0.718991	3.3	ok
16	Drift Y6(INBC no.6)-NL	NonStatic	-1.820287	3.3	ok
16	Drift Y6(INBC no.6)-NL	NonStatic	-1.820287	3.3	ok
16	Drift Y7(INBC no.6)-NL	NonStatic	-0.510881	3.3	ok
16	Drift Y7(INBC no.6)-NL	NonStatic	-0.510881	3.3	ok
16	Drift Y8(INBC no.6)-NL	NonStatic	-0.510881	3.3	ok
16	Drift Y8(INBC no.6)-NL	NonStatic	-0.510881	3.3	ok
16	Drift Y1-1(INBC no.6)-NL	NonStatic	0.575693	3.3	ok
16	Drift Y1-1(INBC no.6)-NL	NonStatic	0.575693	3.3	ok
16	Drift Y2-1(INBC no.6)-NL	NonStatic	-1.067623	3.3	ok
16	Drift Y2-1(INBC no.6)-NL	NonStatic	-1.067623	3.3	ok
16	Drift Y3-1(INBC no.6)-NL	NonStatic	-0.249588	3.3	ok
16	Drift Y3-1(INBC no.6)-NL	NonStatic	-0.249588	3.3	ok
16	Drift Y4-1(INBC no.6)-NL	NonStatic	-0.249588	3.3	ok
16	Drift Y4-1(INBC no.6)-NL	NonStatic	-0.249588	3.3	ok
16	Drift Y5-1(INBC no.6)-NL	NonStatic	0.974991	3.3	ok
16	Drift Y5-1(INBC no.6)-NL	NonStatic	0.974991	3.3	ok
16	Drift Y6-1(INBC no.6)-NL	NonStatic	-1.553349	3.3	ok
16	Drift Y6-1(INBC no.6)-NL	NonStatic	-1.553349	3.3	ok
16	Drift Y7-1(INBC no.6)-NL	NonStatic	-0.249588	3.3	ok
16	Drift Y7-1(INBC no.6)-NL	NonStatic	-0.249588	3.3	ok
16	Drift Y8-1(INBC no.6)-NL	NonStatic	-0.249588	3.3	ok
16	Drift Y8-1(INBC no.6)-NL	NonStatic	-0.249588	3.3	ok
16	Drift Y9(INBC no.6)-NL	NonStatic	0.287026	3.3	ok
16	Drift Y9(INBC no.6)-NL	NonStatic	0.287026	3.3	ok
16	Drift Y10(INBC no.6)-NL	NonStatic	-1.360101	3.3	ok
16	Drift Y10(INBC no.6)-NL	NonStatic	-1.360101	3.3	ok
16	Drift Y11(INBC no.6)-NL	NonStatic	-0.54017	3.3	ok
16	Drift Y11(INBC no.6)-NL	NonStatic	-0.54017	3.3	ok
16	Drift Y12(INBC no.6)-NL	NonStatic	-0.54017	3.3	ok
16	Drift Y12(INBC no.6)-NL	NonStatic	-0.54017	3.3	ok
16	Drift Y13(INBC no.6)-NL	NonStatic	0.692701	3.3	ok
16	Drift Y13(INBC no.6)-NL	NonStatic	0.692701	3.3	ok

16	Drift Y14(INBC no.6)-NL	NonStatic	-1.852711	3.3	ok
16	Drift Y14(INBC no.6)-NL	NonStatic	-1.852711	3.3	ok
16	Drift Y15(INBC no.6)-NL	NonStatic	-0.54017	3.3	ok
16	Drift Y15(INBC no.6)-NL	NonStatic	-0.54017	3.3	ok
16	Drift Y16(INBC no.6)-NL	NonStatic	-0.54017	3.3	ok
16	Drift Y16(INBC no.6)-NL	NonStatic	-0.54017	3.3	ok
16	Drift Y9-1(INBC no.6)-NL	NonStatic	0.549186	3.3	ok
16	Drift Y9-1(INBC no.6)-NL	NonStatic	0.549186	3.3	ok
16	Drift Y10-1(INBC no.6)-NL	NonStatic	-1.098958	3.3	ok
16	Drift Y10-1(INBC no.6)-NL	NonStatic	-1.098958	3.3	ok
16	Drift Y11-1(INBC no.6)-NL	NonStatic	-0.278529	3.3	ok
16	Drift Y11-1(INBC no.6)-NL	NonStatic	-0.278529	3.3	ok
16	Drift Y12-1(INBC no.6)-NL	NonStatic	-0.278529	3.3	ok
16	Drift Y12-1(INBC no.6)-NL	NonStatic	-0.278529	3.3	ok
16	Drift Y13-1(INBC no.6)-NL	NonStatic	0.948988	3.3	ok
16	Drift Y13-1(INBC no.6)-NL	NonStatic	0.948988	3.3	ok
16	Drift Y14-1(INBC no.6)-NL	NonStatic	-1.585438	3.3	ok
16	Drift Y14-1(INBC no.6)-NL	NonStatic	-1.585438	3.3	ok
16	Drift Y15-1(INBC no.6)-NL	NonStatic	-0.278529	3.3	ok
16	Drift Y15-1(INBC no.6)-NL	NonStatic	-0.278529	3.3	ok
16	Drift Y16-1(INBC no.6)-NL	NonStatic	-0.278529	3.3	ok
16	Drift Y16-1(INBC no.6)-NL	NonStatic	-0.278529	3.3	ok
16	Drift Y17(INBC no.6)-NL	NonStatic	0.34709	3.3	ok
16	Drift Y17(INBC no.6)-NL	NonStatic	0.34709	3.3	ok
16	Drift Y18(INBC no.6)-NL	NonStatic	-1.298886	3.3	ok
16	Drift Y18(INBC no.6)-NL	NonStatic	-1.298886	3.3	ok
16	Drift Y19(INBC no.6)-NL	NonStatic	-0.479527	3.3	ok
16	Drift Y19(INBC no.6)-NL	NonStatic	-0.479527	3.3	ok
16	Drift Y20(INBC no.6)-NL	NonStatic	-0.479527	3.3	ok
16	Drift Y20(INBC no.6)-NL	NonStatic	-0.479527	3.3	ok
16	Drift Y21(INBC no.6)-NL	NonStatic	0.750758	3.3	ok
16	Drift Y21(INBC no.6)-NL	NonStatic	0.750758	3.3	ok
16	Drift Y22(INBC no.6)-NL	NonStatic	-1.789439	3.3	ok
16	Drift Y22(INBC no.6)-NL	NonStatic	-1.789439	3.3	ok
16	Drift Y23(INBC no.6)-NL	NonStatic	-0.479527	3.3	ok
16	Drift Y23(INBC no.6)-NL	NonStatic	-0.479527	3.3	ok
16	Drift Y24(INBC no.6)-NL	NonStatic	-0.479527	3.3	ok
16	Drift Y24(INBC no.6)-NL	NonStatic	-0.479527	3.3	ok
16	Drift Y17-1(INBC no.6)-NL	NonStatic	0.609149	3.3	ok

16	Drift Y17-1(INBC no.6)-NL	NonStatic	0.609149	3.3	ok
16	Drift Y18-1(INBC no.6)-NL	NonStatic	-1.037844	3.3	ok
16	Drift Y18-1(INBC no.6)-NL	NonStatic	-1.037844	3.3	ok
16	Drift Y19-1(INBC no.6)-NL	NonStatic	-0.217986	3.3	ok
16	Drift Y19-1(INBC no.6)-NL	NonStatic	-0.217986	3.3	ok
16	Drift Y20-1(INBC no.6)-NL	NonStatic	-0.217986	3.3	ok
16	Drift Y20-1(INBC no.6)-NL	NonStatic	-0.217986	3.3	ok
16	Drift Y21-1(INBC no.6)-NL	NonStatic	1.007091	3.3	ok
16	Drift Y21-1(INBC no.6)-NL	NonStatic	1.007091	3.3	ok
16	Drift Y22-1(INBC no.6)-NL	NonStatic	-1.522235	3.3	ok
16	Drift Y22-1(INBC no.6)-NL	NonStatic	-1.522235	3.3	ok
16	Drift Y23-1(INBC no.6)-NL	NonStatic	-0.217986	3.3	ok
16	Drift Y23-1(INBC no.6)-NL	NonStatic	-0.217986	3.3	ok
16	Drift Y24-1(INBC no.6)-NL	NonStatic	-0.217986	3.3	ok
16	Drift Y24-1(INBC no.6)-NL	NonStatic	-0.217986	3.3	ok
16	Drift Y25(INBC no.6)-NL	NonStatic	0.243504	3.3	ok
16	Drift Y25(INBC no.6)-NL	NonStatic	0.243504	3.3	ok
16	Drift Y26(INBC no.6)-NL	NonStatic	-1.401798	3.3	ok
16	Drift Y26(INBC no.6)-NL	NonStatic	-1.401798	3.3	ok
16	Drift Y27(INBC no.6)-NL	NonStatic	-0.582772	3.3	ok
16	Drift Y27(INBC no.6)-NL	NonStatic	-0.582772	3.3	ok
16	Drift Y28(INBC no.6)-NL	NonStatic	-0.582772	3.3	ok
16	Drift Y28(INBC no.6)-NL	NonStatic	-0.582772	3.3	ok
16	Drift Y29(INBC no.6)-NL	NonStatic	0.650697	3.3	ok
16	Drift Y29(INBC no.6)-NL	NonStatic	0.650697	3.3	ok
16	Drift Y30(INBC no.6)-NL	NonStatic	-1.896009	3.3	ok
16	Drift Y30(INBC no.6)-NL	NonStatic	-1.896009	3.3	ok
16	Drift Y31(INBC no.6)-NL	NonStatic	-0.582772	3.3	ok
16	Drift Y31(INBC no.6)-NL	NonStatic	-0.582772	3.3	ok
16	Drift Y32(INBC no.6)-NL	NonStatic	-0.582772	3.3	ok
16	Drift Y32(INBC no.6)-NL	NonStatic	-0.582772	3.3	ok
16	Drift Y25-1(INBC no.6)-NL	NonStatic	0.505548	3.3	ok
16	Drift Y25-1(INBC no.6)-NL	NonStatic	0.505548	3.3	ok
16	Drift Y26-1(INBC no.6)-NL	NonStatic	-1.140769	3.3	ok
16	Drift Y26-1(INBC no.6)-NL	NonStatic	-1.140769	3.3	ok
16	Drift Y27-1(INBC no.6)-NL	NonStatic	-0.321245	3.3	ok
16	Drift Y27-1(INBC no.6)-NL	NonStatic	-0.321245	3.3	ok
16	Drift Y28-1(INBC no.6)-NL	NonStatic	-0.321245	3.3	ok
16	Drift Y28-1(INBC no.6)-NL	NonStatic	-0.321245	3.3	ok

16	Drift Y29-1(INBC no.6)-NL	NonStatic	0.90694	3.3	ok
16	Drift Y29-1(INBC no.6)-NL	NonStatic	0.90694	3.3	ok
16	Drift Y30-1(INBC no.6)-NL	NonStatic	-1.628857	3.3	ok
16	Drift Y30-1(INBC no.6)-NL	NonStatic	-1.628857	3.3	ok
16	Drift Y31-1(INBC no.6)-NL	NonStatic	-0.321245	3.3	ok
16	Drift Y31-1(INBC no.6)-NL	NonStatic	-0.321245	3.3	ok
16	Drift Y32-1(INBC no.6)-NL	NonStatic	-0.321245	3.3	ok
16	Drift Y32-1(INBC no.6)-NL	NonStatic	-0.321245	3.3	ok
16	Drift Y1(INBC no.6)	Combination	0.313884	3.3	ok
16	Drift Y2(INBC no.6)	Combination	-1.328419	3.3	ok
16	Drift Y3(INBC no.6)	Combination	-0.510881	3.3	ok
16	Drift Y4(INBC no.6)	Combination	-0.510881	3.3	ok
16	Drift Y5(INBC no.6)	Combination	0.718991	3.3	ok
16	Drift Y6(INBC no.6)	Combination	-1.820287	3.3	ok
16	Drift Y7(INBC no.6)	Combination	-0.510881	3.3	ok
16	Drift Y8(INBC no.6)	Combination	-0.510881	3.3	ok
16	Drift Y1-1(INBC no.6)	Combination	0.575693	3.3	ok
16	Drift Y2-1(INBC no.6)	Combination	-1.067623	3.3	ok
16	Drift Y3-1(INBC no.6)	Combination	-0.249588	3.3	ok
16	Drift Y4-1(INBC no.6)	Combination	-0.249588	3.3	ok
16	Drift Y5-1(INBC no.6)	Combination	0.974991	3.3	ok
16	Drift Y6-1(INBC no.6)	Combination	-1.553349	3.3	ok
16	Drift Y7-1(INBC no.6)	Combination	-0.249588	3.3	ok
16	Drift Y8-1(INBC no.6)	Combination	-0.249588	3.3	ok
16	Drift Y9(INBC no.6)	Combination	0.287026	3.3	ok
16	Drift Y10(INBC no.6)	Combination	-1.360101	3.3	ok
16	Drift Y11(INBC no.6)	Combination	-0.54017	3.3	ok
16	Drift Y12(INBC no.6)	Combination	-0.54017	3.3	ok
16	Drift Y13(INBC no.6)	Combination	0.692701	3.3	ok
16	Drift Y14(INBC no.6)	Combination	-1.852711	3.3	ok
16	Drift Y15(INBC no.6)	Combination	-0.54017	3.3	ok
16	Drift Y16(INBC no.6)	Combination	-0.54017	3.3	ok
16	Drift Y9-1(INBC no.6)	Combination	0.549186	3.3	ok
16	Drift Y10-1(INBC no.6)	Combination	-1.098958	3.3	ok
16	Drift Y11-1(INBC no.6)	Combination	-0.278529	3.3	ok
16	Drift Y12-1(INBC no.6)	Combination	-0.278529	3.3	ok
16	Drift Y13-1(INBC no.6)	Combination	0.948988	3.3	ok
16	Drift Y14-1(INBC no.6)	Combination	-1.585438	3.3	ok
16	Drift Y15-1(INBC no.6)	Combination	-0.278529	3.3	ok

16	Drift Y16-1(INBC no.6)	Combination	-0.278529	3.3	ok
16	Drift Y17(INBC no.6)	Combination	0.34709	3.3	ok
16	Drift Y18(INBC no.6)	Combination	-1.298886	3.3	ok
16	Drift Y19(INBC no.6)	Combination	-0.479527	3.3	ok
16	Drift Y20(INBC no.6)	Combination	-0.479527	3.3	ok
16	Drift Y21(INBC no.6)	Combination	0.750758	3.3	ok
16	Drift Y22(INBC no.6)	Combination	-1.789439	3.3	ok
16	Drift Y23(INBC no.6)	Combination	-0.479527	3.3	ok
16	Drift Y24(INBC no.6)	Combination	-0.479527	3.3	ok
16	Drift Y17-1(INBC no.6)	Combination	0.609149	3.3	ok
16	Drift Y18-1(INBC no.6)	Combination	-1.037844	3.3	ok
16	Drift Y19-1(INBC no.6)	Combination	-0.217986	3.3	ok
16	Drift Y20-1(INBC no.6)	Combination	-0.217986	3.3	ok
16	Drift Y21-1(INBC no.6)	Combination	1.007091	3.3	ok
16	Drift Y22-1(INBC no.6)	Combination	-1.522235	3.3	ok
16	Drift Y23-1(INBC no.6)	Combination	-0.217986	3.3	ok
16	Drift Y24-1(INBC no.6)	Combination	-0.217986	3.3	ok
16	Drift Y25(INBC no.6)	Combination	0.243504	3.3	ok
16	Drift Y26(INBC no.6)	Combination	-1.401798	3.3	ok
16	Drift Y27(INBC no.6)	Combination	-0.582772	3.3	ok
16	Drift Y28(INBC no.6)	Combination	-0.582772	3.3	ok
16	Drift Y29(INBC no.6)	Combination	0.650697	3.3	ok
16	Drift Y30(INBC no.6)	Combination	-1.896009	3.3	ok
16	Drift Y31(INBC no.6)	Combination	-0.582772	3.3	ok
16	Drift Y32(INBC no.6)	Combination	-0.582772	3.3	ok
16	Drift Y25-1(INBC no.6)	Combination	0.505548	3.3	ok
16	Drift Y26-1(INBC no.6)	Combination	-1.140769	3.3	ok
16	Drift Y27-1(INBC no.6)	Combination	-0.321245	3.3	ok
16	Drift Y28-1(INBC no.6)	Combination	-0.321245	3.3	ok
16	Drift Y29-1(INBC no.6)	Combination	0.90694	3.3	ok
16	Drift Y30-1(INBC no.6)	Combination	-1.628857	3.3	ok
16	Drift Y31-1(INBC no.6)	Combination	-0.321245	3.3	ok
16	Drift Y32-1(INBC no.6)	Combination	-0.321245	3.3	ok

Drift Control According to Iranian Seismic Design Code for petroleum facilities(038)

According to “Iranian seismic design code(Code.038)” table 4-8 ,drift shall not exceed 0.02.

The maximum drift is less than 0.02, so the displacement values are acceptable.

انواع سازه‌ها	گروه کاربری و خطرزایی		
	I و II	III	IV
سازه‌های چهار طبقه و کمتر با تیغه‌بندی‌ها، سقف‌ها، دیوارهای داخلی و سیستم دیوارهای جانبی پیرامونی بدون دیوار برشی بنایی که در برابر جابجایی نسبی طبقه طراحی شده‌اند.	۰٫۰۲۵	۰٫۰۲۰	۰٫۰۱۵
سازه‌های با دیوار برشی بنایی طره‌ای	۰٫۰۱۰	۰٫۰۱۰	۰٫۰۱۰
دیگر سازه‌های با دیوار برشی بنایی	۰٫۰۰۷	۰٫۰۰۷	۰٫۰۰۷
دیگر سازه‌ها	۰٫۰۲۰	۰٫۰۱۵	۰٫۰۱۰

The deflection at level x (δ_x) (in. or mm) used to compute the design story drift, Δ, shall be determined in accordance with the following equation:

Maximum displacement by EY load case(pure) is 4.89 cm which Reduced stiffness values used in the direct analysis method are not intended for use in beam vertical deflection ,drift ,and period of structure.

$$\delta_x = \frac{C_d \delta_{ye}}{I} = \frac{3\times4.89\times0.8}{1.25} = 9.39\ cm\ , \quad \Delta = \frac{9.39}{580} = 0.016 < 0.02\ \ ok$$

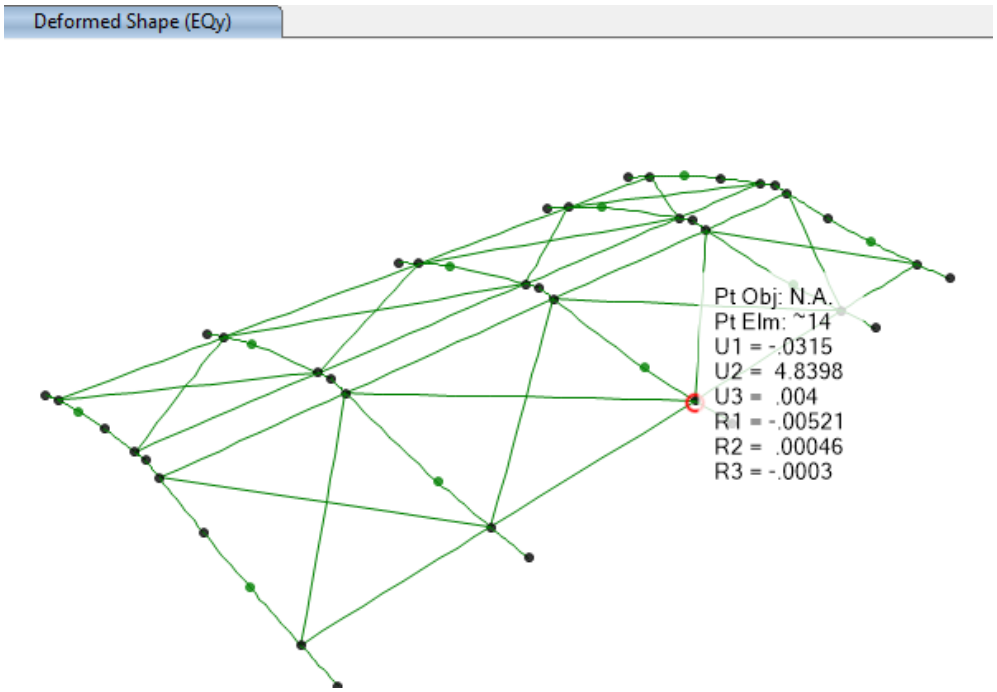

$Drift_{allowable}$ = According to table4-8 of Iranian seismic Design code(code No.038) is $0.02h_{sx}$

h_{sx}=is the story height below level x

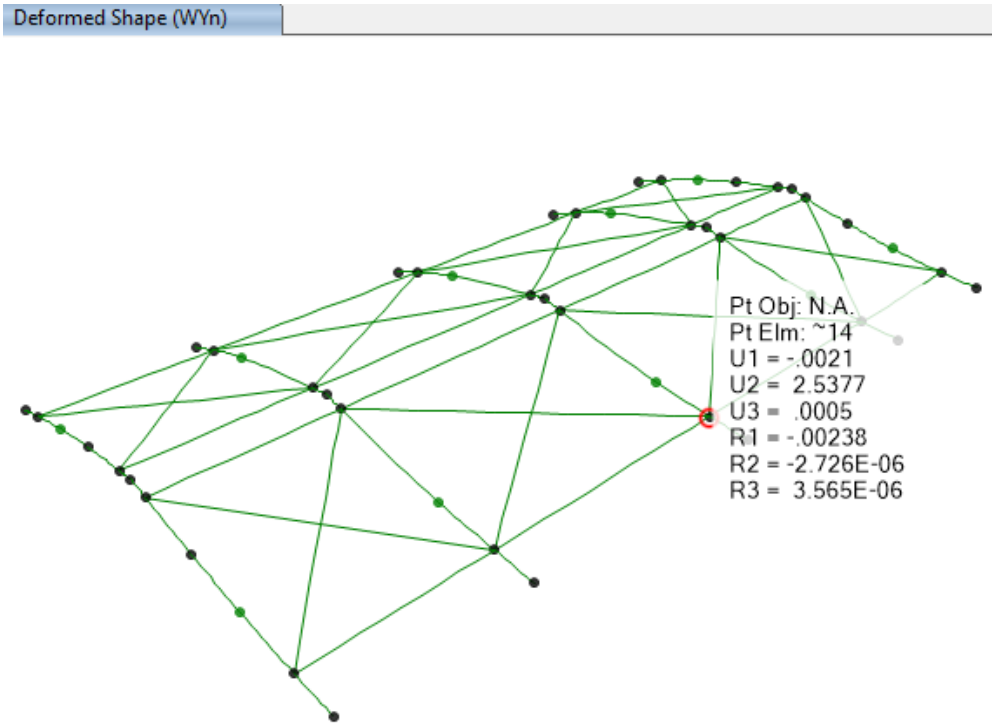

$$\Delta_{all} = \frac{h}{200} = \frac{680-20}{200} = 2.4cm >> \Delta\, exist = 0.8 \times 2.53 = 2.024\, cm \quad ok$$

Maximum displacement by WY load case(pure) is 2.53 cm which Reduced stiffness values used in the direct analysis method are not intended for use in beam vertical deflection ,drift ,and period of structure.

10.0 STRUCTURAL DESIGN RESULTS

The steel structure is checked in accordance with LRFD method. Frame analysis and Structural checks are based on the 3D model that covers all the Load Combinations .All members designed by SAP2000, and code requirements have been checked accordingly. The following figures show the members ratios which are obtained from SAP2000 model analysis and design. All the acceptable ratios for beams & columns have been considered less than 1.0.

10.1 Graphical output

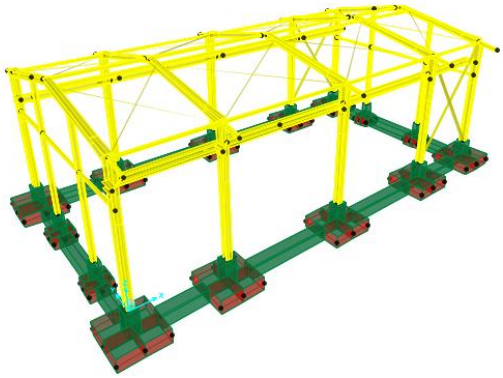

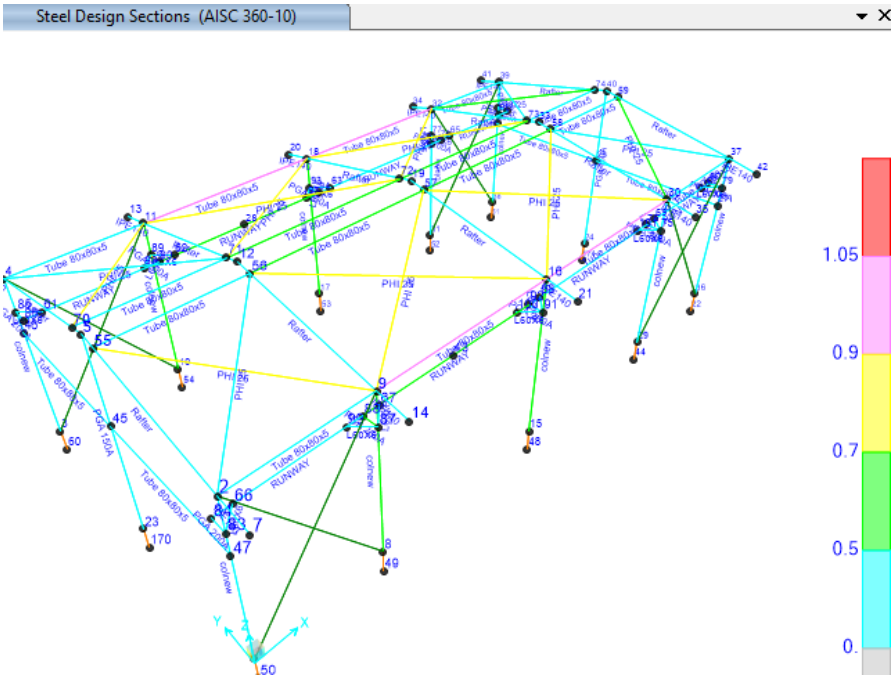

Figure 33: Steel Design Output

11.0 STRUCTURE CONNECTIONS

11.1 DESCRIPTION OF DESIGN PROCEDURE & PARAMETERS

11.1.1.Rafter to rafter connection (top of shelter):

According to Iranian National Building code section 10-3-7-2:

$$M_p = \mathrm{Z.Fy} = 716 \times 2400 = 1718400\ \mathrm{kg.cm} = 17.18\ \mathrm{ton.m}$$

$$M_u = 1.1\ \mathrm{Ry.Mp} = 1.1\mathrm{Ry.Z.Fy} = 1.1 \times 1.15 \times 716 \times 2400 = 2173776\ \mathrm{kg.cm} = 21.737\mathrm{ton.m}$$

$$V = \frac{2[1.1\ Ry\ Mp]}{L_{cf}} = \frac{2 \times 1.1 \times 1.15 \times 716 \times 2400}{1000} = 4347.55\ kg = 4.34\ ton$$

According to sap model M3-3 and V2-2 under critical load combination (Envelope Strength) is as follow:

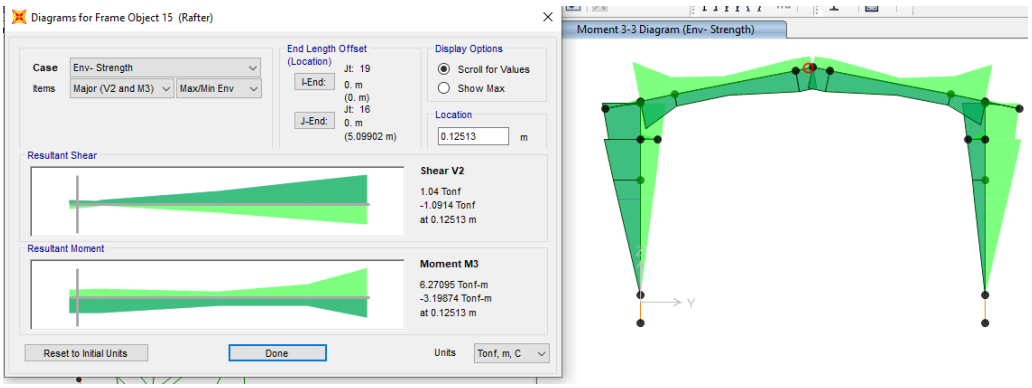

$$\boldsymbol{M_{3-3design\ (envelope\ combo)} = 3.2\ ton.m}$$

$$\mathbf{V_{2-2design\ (envelope\ combo)} = 1.094\ ton}$$

$$\boldsymbol{M_{3-3design\ (omega\ factor)} = 6.3\ ton.m}$$

$$\mathbf{V_{2-2design\ (omega\ factor)} = 1.7\ ton}$$

moment of design should not be less than of 0.5Mp=8.592 ton-m.

$$F_u = 8000\frac{kg}{cm2}$$

$$f_n = \frac{R_n}{Anb} = \emptyset F_{nt} = 4500kg/cm2$$

$$Ab = 4.52\ cm2$$

$$I_{bolt} = 4Ib = 4 \times 4.52 \times (4.5^2 + 17.5^2) = 5903.12cm^4$$

$f_b = \frac{MC}{I}$

$fb = 8.592 * \frac{17.5}{5903.12} * 10^5 = 2457.127 kg/cm2$ <4500kg/cm2 ok

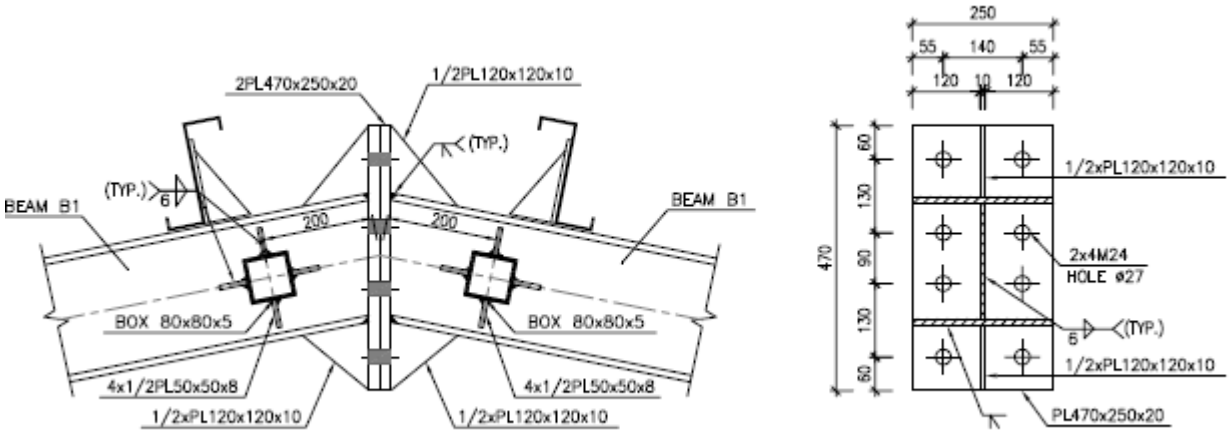

Figure 34: Connecrtion Details

11.1.2 : Rafter to Colum Connection

According to Iranian National Building code No.10 section 10-3-7-2:

$M_p = \mathrm{Z.Fy} = 1116 \times 2400 = 2678400\mathrm{kg.cm} = 26.784\ \mathrm{ton.m}$

$M_u = 1.1\ \mathrm{Ry.Mp} = 1.1\mathrm{Ry.Z.Fy} = 1.1 \times 1.15 \times 1116 \times 2400 = 3388176\ \mathrm{kg.cm} = 33.88\mathrm{ton.m}$

$$V = \frac{2[1.1\ Ry\ Mp]}{L_{cf}} = \frac{2 \times 1.1 \times 1.15 \times 1116 \times 2400}{1000} = 6776.35\ kg = 6.76\ ton$$

According to sap model M3-3 and V2-2 under critical load combination (Envelope Strength) is as follow:

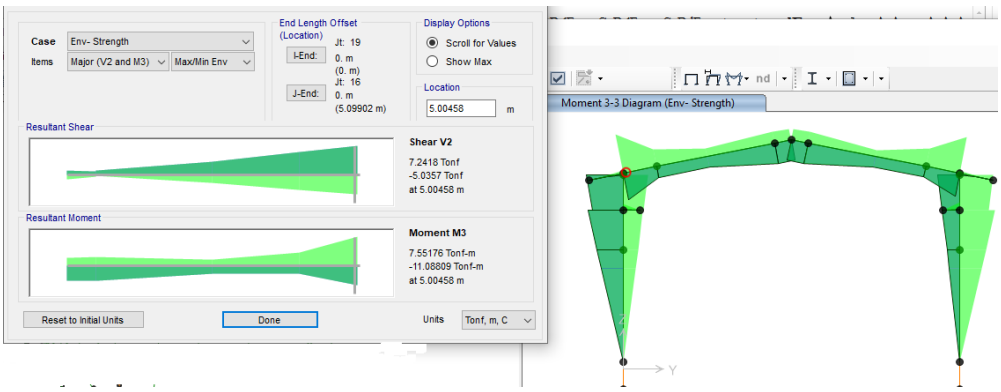

$$M_{3-3design\ (envelope\ combo)} = 11.08\ ton.m$$

$$V_{2-2design\ (envelope\ combo)} = 7.24ton$$

$$M_{3-3design\ (envelope\ combo)} = 15.1\ \ ton.m$$

$$V_{2-2design\ (envelope\ combo)} = 7.5ton$$

Moment of design should not be less than of 0.5Mp=13.392 ton-m.

$$F_u = 8000\frac{kg}{cm2}$$

$$f_n = \frac{R_n}{Anb} = \emptyset F_{nt} = 4500kg/cm2$$

$$Ab = 4.52\ cm2$$

$$I_{bolt} = 4Ib = 4 \times 4.52 \times (7.5^2 + 22.5^2) = 10170\ cm^4$$

$$f_b = \frac{MC}{I}$$

$$fb = 13.392 \times \frac{22.5}{10170} \times 10^5 = 2962.83\ kg/cm2$$ <4500kg/cm2 ok

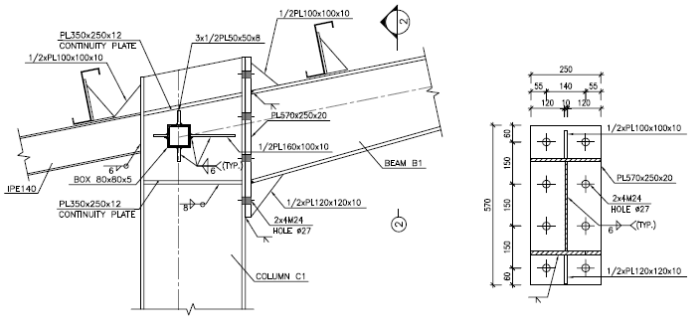

Figure 35: Connecrtion Details

RAFTER TO COLUM CONNECTION

- **Rafter to column design by omega factor :**

RAM Connection
CONNECT Edition

Current Date: 11/18/2023 2:22 PM
Units system: Metric
File name: C:\Users\n.razani\Desktop\Ram Connection\RAFTER TO COL.rcnx

Steel connections

Results

Connection name : **MEP_KNEE_BCF_VERTICAL_EU_1/4_PL_2B_1B1/2**
Connection ID : **1**

Family: Beam - Column flange (BCF)
Type: Knee moment end plate
Design code: AISC 360-16 LRFD

DEMANDS

Description	Beam Ru [T]	Beam Pu [T]	Beam Mu [T*m]	Right beam PufTop [T]	Right beam PufBot [T]	Left beam PufTop [T]	Left beam PufBot [T]	Column Pu [T]	Panel Vu [T]	Load type
DL	5.89	1.14	12.90	-40.81	41.95	0.00	0.00	0.00	41.95	Design

GEOMETRIC CONSIDERATIONS

Dimensions	Unit	Value	Min. value	Max. value	Sta.	References
Extended end plate						
End plate stiffener thickness	[cm]	1.20	0.88	--	✔	DG4 Eq. 3.15, AISC 358-10 Eq. 6.10-9,

						Eq. 6.10-10
Vertical edge distance	[cm]	6.00	3.35	15.24	✔	Sec. J3.5
Horizontal edge distance	[cm]	5.50	3.35	15.24	✔	Sec. J3.5
Vertical bolt spacing (external flange)	[cm]	15.00	6.40	--	✔	Sec. J3.3
Vertical bolt spacing (internal flange)	[cm]	17.22	6.40	--	✔	Sec. J3.3
Horizontal center-to-center spacing (gage)	[cm]	14.00	6.40	25.00	✔	Sec. J3.3, DG4 Sec. 2.4, DG4 Sec. 2.1, 2.4, DG16 Sec. 2.5
Outer bolt distance (external flange)	[cm]	8.00	3.67	--	✔	DG4 Sec. 2.1
Inner bolt distance (external flange)	[cm]	8.00	3.67	--	✔	DG4 Sec. 2.1
Outer bolt distance (internal flange)	[cm]	8.00	3.67	--	✔	DG4 Sec. 2.1
Inner bolt distance (internal flange)	[cm]	8.00	3.67	--	✔	DG4 Sec. 2.1
Bolt diameter	[cm]	2.40	--	3.81	✔	DG4 Sec. 1.1
- Use CJP weld for the end plate stiffener						
Beam						
Weld size (external flange)	[1/16in]	6	3	--	✔	table J2.4
Web	[1/16in]	6	3	--	✔	table J2.4
Support						
Horizontal edge distance	[cm]	5.50	3.04	15.24	✔	Sec. J3.5
Transverse stiffeners						
Width	[cm]	13.00	7.93	--	✔	Sec. J10.8
Weld size	[1/16in]	6	4	--	✔	DG 13 Eq. 4.3-6

- The tension flange bolts overlap the compression flange bolts.

PLATE / COLUMN BEHAVIOR

End plate behaviour (external flange)
Thin plate behavior controlled by plate yielding
End plate behaviour (internal flange)
Thin plate behavior controlled by bolt rupture with prying action
Connection plate behavior (external flange)
Thick plate behavior controlled by no prying bolt rupture
Connection plate behavior (internal flange)
Thick plate behavior controlled by no prying bolt rupture

DESIGN CHECK

Verification	Unit	Capacity	Demand	Ctrl EQ	Ratio	References
Moment end plate (external flange)						
Flexural yielding	[Ton*m]	17.32	0.00	DL	0.00	DG16 Sec 2.5
No prying bolt moment strength	[Ton*m]	30.02	0.00	DL	0.00	DG16 Sec 2.5
Bolt rupture with prying moment strength	[Ton*m]	24.75	0.00	DL	0.00	DG16 Sec 2.5
Bolts shear	[Ton]	60.24	5.89	DL	0.10	Tables (7-1..14)
Bolt bearing under shear load	[Ton]	206.73	0.00	DL	0.00	Eq. J3-6
Shear yielding	[Ton]	68.34	20.40	DL	0.30	DG4 Eq. 3.12
Shear rupture	[Ton]	68.31	20.40	DL	0.30	DG4 Eq 3.14, AISC 358 Eq. 6.9-12, DG4 Eq. 3.13
Moment end plate (internal flange)						
Flexural yielding	[Ton*m]	26.93	13.08	DL	0.49	DG16 Sec 2.5
No prying bolt moment strength	[Ton*m]	26.77	13.08	DL	0.49	DG16 Sec 2.5
Bolt rupture with prying moment strength	[Ton*m]	22.38	13.08	DL	0.58	DG16 Sec 2.5
Bolts shear	[Ton]	60.24	0.00	DL	0.00	Tables (7-1..14)
Bolt bearing under shear load	[Ton]	136.27	5.89	DL	0.04	Eq. J3-6

Shear yielding	[Ton]	68.34	20.97	DL	0.31	DG4 Eq. 3.12
Shear rupture	[Ton]	68.31	20.97	DL	0.31	DG4 Eq 3.14, AISC 358 Eq. 6.9-12, DG4 Eq. 3.13
Beam						
Web weld shear strength	[Ton]	38.78	5.89	DL	0.15	Eq. J2-4
Web weld strength to reach yield stress	[Ton/m]	443.39	182.23	DL	0.41	Eq. J2-4, Eq. J4-1
Shear yielding	[Ton]	39.36	5.89	DL	0.15	Eq. J4-3
Support						
Flexural yielding (external flange)	[Ton*m]	260498.40	0.00	DL	0.00	DG4 Eq. 3.20, Sec. 2.2.3, DG4 Eq. 3.21
Support bolt bearing (external flange)	[Ton]	21139.22	0.00	DL	0.00	Eq. J3-6
Flexural yielding (internal flange)	[Ton*m]	311497.40	13.08	DL	0.00	DG4 Eq. 3.20, Sec. 2.2.3, DG4 Eq. 3.21
Support bolt bearing (internal flange)	[Ton]	14092.82	5.89	DL	0.00	Eq. J3-6
Panel web shear	[Ton]	40.89	41.95	DL	1.03	Sec. G1
Support - right side						
Local web yielding	[Ton]	2510.85	41.95	DL	0.02	DG4 eq. 3.24, DG13 Eq. 4.3-1, Sec. J10
Transverse stiffeners - bottom						
Yielding strength due to axial load	[Ton]	70.52	0.00	DL	0.00	Eq. J4-1
Compression	[Ton]	70.52	0.00	DL	0.00	Sec. J4.4
Flange weld capacity	[Ton]	98.87	0.00	DL	0.00	Eq. J2-4
Web weld capacity	[Ton]	-2176.00	0.00	DL	0.00	Eq. J2-4
Global critical strength ratio	**1.03**					

- Beam design :

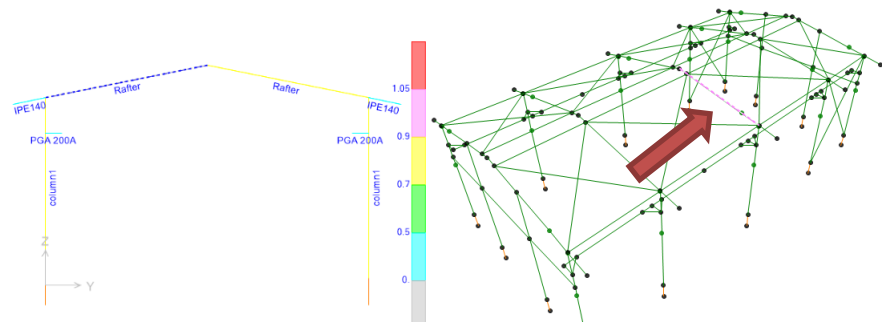


```
AISC 360-10 STEEL SECTION CHECK     (Summary for Combo and Station)
Units  :  Kgf, m, C

Frame :  15        X Mid:  10.       Combo:  S.D..5.4.1      Design Type:  Brace
Length:  5.099     Y Mid:  2.5       Shape:  Rafter          Frame Type:  OMF
Loc   :  5.099     Z Mid:  6.3       Class:  Compact         Princpl Rot: 0. degrees

Provision: LRFD   Analysis: Direct Analysis
D/C Limit=1.      2nd Order: General 2nd Order        Reduction: Tau-b Fixed
AlphaPr/Py=0.023  AlphaPr/Pe=0.015  Tau_b=1.         EA factor=0.8     EI factor=0.8

PhiB=0.9          PhiC=0.9          PhiTY=0.9         PhiTF=0.75
PhiS=0.9          PhiS-RI=1.        PhiST=0.9

A=0.008           I33=1.641E-04     r33=0.14          S33=0.001         Av3=0.005
```

```
J=0.              I22=3.126E-05     r22=0.061         S22=2.501E-04     Av2=0.003
E=2.039E+10       Fy=24000000.      Ry=1.611          z33=0.001         Cw=0.
RLLF=1.           Fu=37000000.                        z22=3.798E-04


STRESS CHECK FORCES & MOMENTS (Combo S.D..5.4.1)
    Location              Pu        Mu33        Mu22         Vu2         Vu3          Tu
    5.099          -4607.206  -18053.477      13.032    7199.284    -153.417       0.559

PMM DEMAND/CAPACITY RATIO    (H1-1b)
    D/C Ratio:     0.767 = 0.017 + 0.749 + 0.002
                       = (1/2)(Pr/Pc) + (Mr33/Mc33) + (Mr22/Mc22)

AXIAL FORCE & BIAXIAL MOMENT DESIGN    (H1-1b)
    Factor                 L          K1          K2          B1          B2          Cm
    Major Bending         1.          1.          1.          1.          1.          1.
    Minor Bending        0.9          1.          1.          1.          1.          1.

                        Lltb        Kltb          Cb
    LTB                  0.9          1.       2.448

                          Pu     phi*Pnc     phi*Pnt
                       Force    Capacity    Capacity
    Axial          -4607.206  136791.082     181440.

                          Mu      phi*Mn      phi*Mn      phi*Mn
                      Moment    Capacity      No LTB        Cb=1
    Major Moment  -18053.477     24105.6     24105.6   22126.197
    Minor Moment      13.032     8203.68

SHEAR CHECK
                                                Vu      phi*Vn      Stress      Status
                                             Force    Capacity       Ratio       Check
    Major Shear     7199.284    33592.32       0.214          OK
    Minor Shear      153.417      77760.       0.002          OK

BRACE MAXIMUM AXIAL LOADS
                          P           P
                       Comp        Tens
    Axial          -4607.206          0.
```

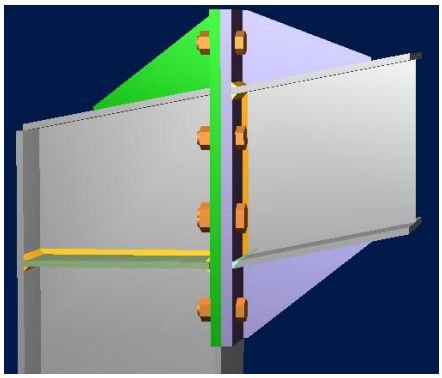

- **Column design :**

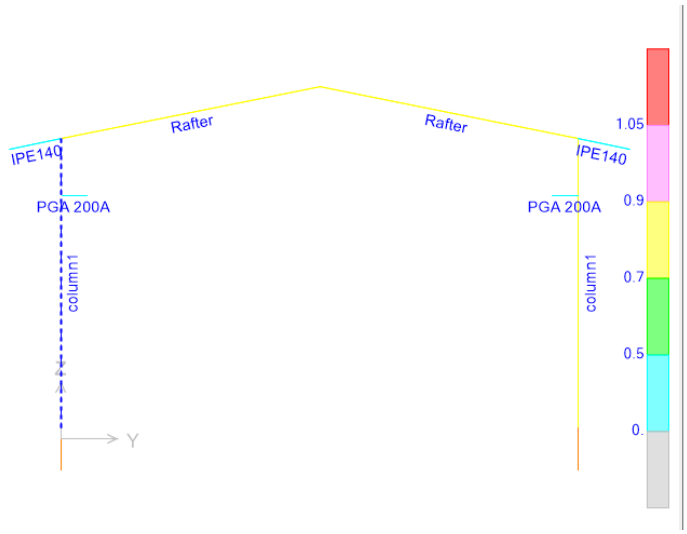

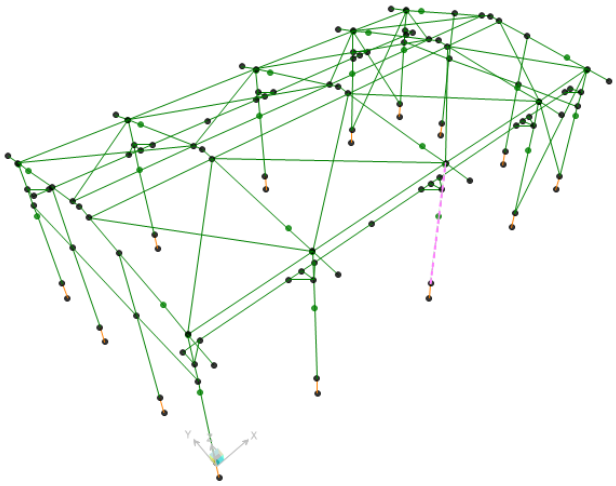

```
AISC 360-10 STEEL SECTION CHECK     (Summary for Combo and Station)
Units  :  Kgf, m, C

Frame :  13        X Mid:  10.       Combo:  S.D..5.4.1      Design Type:  Column
Length:  5.6       Y Mid:  0.        Shape:  column1         Frame Type:  OMF
Loc   :  4.5       Z Mid:  3.        Class:  Compact         Princpl Rot: 0. degrees

Provision: LRFD   Analysis: Direct Analysis
D/C Limit=1.      2nd Order: General 2nd Order        Reduction: Tau-b Fixed
AlphaPr/Py=0.058  AlphaPr/Pe=0.038  Tau_b=1.          EA factor=0.8     EI factor=0.8

PhiB=0.9          PhiC=0.9          PhiTY=0.9         PhiTF=0.75
PhiS=0.9          PhiS-RI=1.        PhiST=0.9

A=0.008           I33=1.720E-04     r33=0.14          S33=0.001         Av3=0.005
J=0.              I22=3.126E-05     r22=0.061         S22=2.501E-04     Av2=0.003
E=2.039E+10       Fy=24000000.      Ry=1.611          z33=0.001         Cw=0.
RLLF=1.           Fu=37000000.                        z22=3.798E-04


STRESS CHECK FORCES & MOMENTS (Combo S.D..5.4.1)
    Location              Pu        Mu33        Mu22         Vu2         Vu3          Tu
    4.5           -11716.839   16975.674     353.956   -3453.893     -82.354       2.314

PMM DEMAND/CAPACITY RATIO    (H1-1b)
    D/C Ratio:      0.78 = 0.042 + 0.695 + 0.043
                         = (1/2)(Pr/Pc) + (Mr33/Mc33) + (Mr22/Mc22)

AXIAL FORCE & BIAXIAL MOMENT DESIGN    (H1-1b)
    Factor                 L          K1          K2          B1          B2          Cm
    Major Bending      0.804          1.          1.          1.          1.          1.
    Minor Bending      0.804          1.          1.          1.          1.          1.

                        Lltb        Kltb          Cb
    LTB                0.804          1.       1.397
```

```
                        Pu      phi*Pnc     phi*Pnt
                     Force     Capacity    Capacity
   Axial         -11716.839  138573.483  181844.029

                        Mu      phi*Mn      phi*Mn      phi*Mn
                    Moment     Capacity      No LTB        Cb=1
   Major Moment   16975.674   24425.715   24425.715   22520.066
   Minor Moment     353.956    8204.488

SHEAR CHECK
                                                Vu      phi*Vn      Stress      Status
                                             Force    Capacity       Ratio       Check
   Major Shear     3453.893   33834.737       0.102          OK
   Minor Shear       82.354      77760.       0.001          OK
```

11.2 PURLIN DESIGN

11.2.1. PROPERTY OF PURLIN(Z180X2.5)

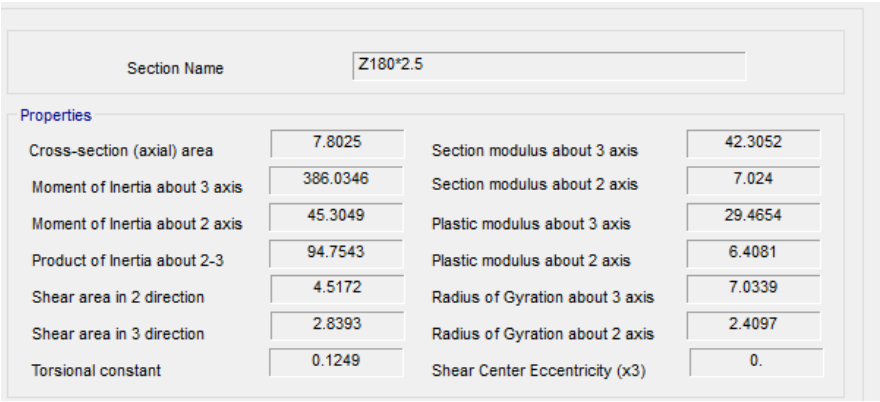

FIGURE 36-Section Property Of Purlin

According to above table :

$A = 7.80\ cm2$

$J = 0.12\ cm4$

$Ix = 386.06\ cm4$

$Iy = 45.304\ cm4$

$rx = 7.033\ cm$

$ry = 2.41\ cm$

$ho = 18\ cm$

$SY = 42.305\ cm3$

$SX = 7.024\ cm3$

FOR Z 180 :

$D + L = 26 + 50 = 76\ kg/m^2$

$P_y = 76.\cos 11 = 74.6\ \ kg/m^2$

$P_x = 76.\sin 11 = 14.5\ \ kg/m^2$

$$\text{middle of span}: \ M_y = \frac{w.L^2}{8} = \frac{76 \times 1.0 \times 5^2}{8} = 237.5\ kg.m$$

$$\text{middle of span}: \ M_x = \frac{w.L^2}{360} = \frac{14.5 \times 1 \times 5^2}{360} = 1.00 kg.m$$

$$f_b = \frac{M_y}{s_y} + 2\frac{M_x}{s_x} = \frac{237.5 \times 100}{42.305} + 2\frac{1.00 \times 100}{7.024} = 561.39 + 28.47 = 589.86 < 1440\ ok$$

$$\text{moment on sagrod support}: \ M_y = \frac{w.L^2}{9} = \frac{76 \times 1.0 \times 5^2}{9} = 211.11\ kg.m$$

$$\text{moment on sagrod support}: \ M_x = \frac{w.L^2}{90} = \frac{14.5 \times 1.0 \times 5^2}{90} = 4.02\ kg.m$$

$$f_b = \frac{M_y}{s_y} + 2\frac{M_x}{s_x} = \frac{211.11 \times 100}{42.305} + 2\frac{4.02 \times 100}{7.024} = 498.99 + 114.46 = 613.45 < \ 1440 \quad ok$$

FOR Z 180 :

$0.6D + W = 26 + 143 = 169\ kg/m^2$

$P_y = 169.\cos 11 = 165\ \ kg/m^2$

$P_x = 169.\sin 11 = 32.24\ \ kg/m^2$

$$\text{middle of span}: \ M_y = \frac{w.L^2}{8} = \frac{165 \times 1.0 \times 5^2}{8} = 515.6\ kg.m$$

$$\text{middle of span}: \ M_x = \frac{w.L^2}{360} = \frac{32.24 \times 1 \times 5^2}{360} = 2.23 kg.m$$

$$f_b = \frac{M_y}{s_y} + 2\frac{M_x}{s_x} = \frac{515.6 \times 100}{42.305} + 2\frac{2.23 \times 100}{7.024} = 561.39 + 28.47 = 1282 < 1440\ ok$$

$$\text{moment on sagrod support}: \ M_y = \frac{w.L^2}{9} = \frac{165 \times 1.0 \times 5^2}{9} = 470\ kg.m$$

$$\text{moment on sagrod support}: \ M_x = \frac{w.L^2}{90} = \frac{32.24 \times 1.0 \times 5^2}{90} = 8.95\ kg.m$$

$$f_b = \frac{M_y}{s_y} + 2\frac{M_x}{s_x} = \frac{470 \times 100}{42.305} + 2\frac{8.95 \times 100}{7.024} = 1110 + 254 = 1364 < \ 1440 \quad ok$$

11.2.2.UN DEFORMED SHAPE CONTROL:

$$\text{dead + live loads}: \Delta = \frac{5 \times q \times L^4}{384 \times E \times I} = \frac{5 \times 0.76 \times 1.0 \times 600^4}{384 \times 2.04 \times 10^6 \times 1350} = 0.46\text{cm} < \frac{L}{240} = 2.0\text{cm}$$

$$\text{for live loads}: \Delta = \frac{5 \times q \times L^4}{384 \times E \times I} = \frac{5 \times 0.5 \times 1.0 \times 600^4}{384 \times 2.04 \times 10^6 \times 1350} = 0.30\text{ cm} < \frac{L}{360} = 1.3\text{ cm}$$

11.2.3. DEFLECTION CHECK OF WALLPOSTS:

According to civil & structural design criteria maximum deflection under critical load combination with E or W cases is H/200 that results have been shown as follow:

TABLE: Joint Displacements						
Joint	OutputCase	CaseType	StepType	U1	U allowable	
Text	Text	Text	Text	cm		check
114	WXp	LinStatic		0.213033	2.375	ok
114	WXn	LinStatic		0.164488	2.375	ok
114	WXp1	LinStatic		0	2.375	ok
114	WXn1	LinStatic		0	2.375	ok
114	EQx	LinStatic		0.205521	2.375	ok
114	Env- allowable	Combination	Max	0.194406	2.375	ok
114	Env- allowable	Combination	Min	-0.22335	2.375	ok
115	WXp	LinStatic		0.215196	2.375	ok
115	WXn	LinStatic		0.16665	2.375	ok
115	WXp1	LinStatic		0	2.375	ok
115	WXn1	LinStatic		0	2.375	ok
115	EQx	LinStatic		0.205521	2.375	ok
115	Env- allowable	Combination	Max	0.195537	2.375	ok
115	Env- allowable	Combination	Min	-0.226812	2.375	ok
117	WXp	LinStatic		0.20182	2.375	ok
117	WXn	LinStatic		0.175725	2.375	ok
117	WXp1	LinStatic		0	2.375	ok
117	WXn1	LinStatic		0	2.375	ok
117	EQx	LinStatic		0.244886	2.375	ok
117	Env- allowable	Combination	Max	0.200024	2.375	ok
117	Env- allowable	Combination	Min	-0.378363	2.375	ok
119	WXp	LinStatic		0.200303	2.375	ok
119	WXn	LinStatic		0.174209	2.375	ok
119	WXp1	LinStatic		0	2.375	ok
119	WXn1	LinStatic		0	2.375	ok
119	EQx	LinStatic		0.244886	2.375	ok
119	Env- allowable	Combination	Max	0.206779	2.375	ok

11.3 Roof bracing Design

According to INBC No.10 section 10-2-3-4 for tensile member :

Roof brace =Ø25

$$\emptyset_t P_n = \emptyset_t F_y A_g = 0.9 \times 4000 \times 4.91 = 17676\ kg$$

According to sap model maximum tensile force is 9942 kg & it's OK.

TABLE: Element Forces - Frames				
Frame	Station	OutputCase	CaseType	P
Text	cm	Text	Text	Kgf
53	0	Env- Strength	Combination	1807.36
53	304.385	Env- Strength	Combination	1808.89
53	608.769	Env- Strength	Combination	1810.42
53	0	Env- Strength	Combination	-2.38
53	304.385	Env- Strength	Combination	-0.008515
53	608.769	Env- Strength	Combination	1.28
54	0	Env- Strength	Combination	726.55
54	377.69	Env- Strength	Combination	724.2
54	755.381	Env- Strength	Combination	721.85
54	0	Env- Strength	Combination	1.31
54	377.69	Env- Strength	Combination	-0.00127
54	755.381	Env- Strength	Combination	-2.35
55	377.69	Env- Strength	Combination	1497.21
55	755.381	Env- Strength	Combination	1499.49
55	0	Env- Strength	Combination	-2.29
55	377.69	Env- Strength	Combination	-0.006682
55	755.381	Env- Strength	Combination	1.28
56	0	Env- Strength	Combination	1673.15
56	304.385	Env- Strength	Combination	1671.59
56	608.769	Env- Strength	Combination	1670.03
56	0	Env- Strength	Combination	1.3
56	304.385	Env- Strength	Combination	-0.004084
56	608.769	Env- Strength	Combination	-2.43
61	0	Env- Strength	Combination	3348.05
61	304.385	Env- Strength	Combination	3346
61	608.769	Env- Strength	Combination	3343.96
61	0	Env- Strength	Combination	1.53
61	304.385	Env- Strength	Combination	-0.001703
61	608.769	Env- Strength	Combination	-1.53
62	0	Env- Strength	Combination	501.32
62	377.69	Env- Strength	Combination	502.62

62	755.381	Env- Strength	Combination	503.93
62	0	Env- Strength	Combination	-2.44
62	377.69	Env- Strength	Combination	-0.00321
62	755.381	Env- Strength	Combination	1.3
63	0	Env- Strength	Combination	618.01
63	377.69	Env- Strength	Combination	616.49
63	755.381	Env- Strength	Combination	614.97
63	0	Env- Strength	Combination	1.26
63	377.69	Env- Strength	Combination	-0.007251
63	755.381	Env- Strength	Combination	-2.37
64	0	Env- Strength	Combination	4010.59
64	304.385	Env- Strength	Combination	4012.67
64	608.769	Env- Strength	Combination	4014.74
64	0	Env- Strength	Combination	-1.82
64	304.385	Env- Strength	Combination	-0.001864
64	608.769	Env- Strength	Combination	1.3
65	0	Env- Strength	Combination	4095.18
65	304.385	Env- Strength	Combination	4093.06
65	608.769	Env- Strength	Combination	4090.94
65	0	Env- Strength	Combination	1.33
65	304.385	Env- Strength	Combination	-0.002085
65	608.769	Env- Strength	Combination	-2.12
66	0	Env- Strength	Combination	2030.72
66	304.385	Env- Strength	Combination	2032.29
66	608.769	Env- Strength	Combination	2033.85
66	0	Env- Strength	Combination	-2.43
66	304.385	Env- Strength	Combination	-0.004808
66	608.769	Env- Strength	Combination	1.3
67	0	Env- Strength	Combination	1003.82
67	377.69	Env- Strength	Combination	1001.42
67	755.381	Env- Strength	Combination	999.03
67	0	Env- Strength	Combination	1.34
67	377.69	Env- Strength	Combination	-0.006733
67	755.381	Env- Strength	Combination	-2.4
68	0	Env- Strength	Combination	707.97
68	377.69	Env- Strength	Combination	709.53
68	755.381	Env- Strength	Combination	711.09
68	0	Env- Strength	Combination	-2.42
68	377.69	Env- Strength	Combination	-0.002417

68	755.381	Env- Strength	Combination	1.3
83	0	Env- Strength	Combination	1782.11
83	377.69	Env- Strength	Combination	1784.44
83	755.381	Env- Strength	Combination	1786.78
83	0	Env- Strength	Combination	-2.33
83	377.69	Env- Strength	Combination	-0.001727
83	755.381	Env- Strength	Combination	1.3
84	0	Env- Strength	Combination	787.13
84	377.69	Env- Strength	Combination	785.8
84	755.381	Env- Strength	Combination	784.47
84	0	Env- Strength	Combination	1.34
84	377.69	Env- Strength	Combination	-0.008554
84	755.381	Env- Strength	Combination	-2.48
85	0	Env- Strength	Combination	3319.42
85	304.385	Env- Strength	Combination	3321.5
85	608.769	Env- Strength	Combination	3323.58
85	0	Env- Strength	Combination	-2.08
85	304.385	Env- Strength	Combination	-0.002082
85	608.769	Env- Strength	Combination	1.3
86	0	Env- Strength	Combination	2030.41
86	304.385	Env- Strength	Combination	2028.82
86	608.769	Env- Strength	Combination	2027.23
86	0	Env- Strength	Combination	1.33
86	304.385	Env- Strength	Combination	-0.008007
86	608.769	Env- Strength	Combination	-2.47
97	0	Env- Strength	Combination	9942.5
97	40	Env- Strength	Combination	9654.14
97	80	Env- Strength	Combination	9365.78
97	0	Env- Strength	Combination	-7855.16
97	40	Env- Strength	Combination	-8179.56
97	80	Env- Strength	Combination	-8503.97
			Max(kgf)=	9942.5

11.4 Base Plate

11.4.1 Design force :

According to AISC341-10 section D2-6b for shear design of base plate :

$$V_{tr} = \frac{M_p}{H} = \frac{ZF_y}{H} = \frac{1331 \times 2400 \times 10^{-5}}{5.8} = 5.5ton$$

$$V_{long} = R_y A_g F_y cos\theta = 1.25 \times 4000 \times 12.56 \times cos\ 70.94 = 20507.8\ kg = 20.5\ ton$$

11.4.2.Shear check in transverse direction :

According to INBC No.10 section 10-2-6-2-1

$$\emptyset V_n = 0.6 F_y A_w C_v\ \emptyset_v$$

$$\frac{h}{t_w} = \frac{28}{0.8} = 35 < 2.24\sqrt{\frac{2.06\times10^6}{2400}} = 65 \quad \text{then} \quad C_v = 1 \quad \emptyset_v = 1$$

$$\emptyset V_n = 0.6 \times 2400 \times (25 \times 0.8) \times 1 \times 1 = 28.80\ on > 5.5\ \ ton$$

11.4.3.Shear check in longitudinal direction :

According to INBC No.10 section 10-2-6-7-2

$$K_v = 1.2$$

$$\frac{h}{t_w} = \frac{\frac{b}{2}}{t_f} = \frac{12.5}{1.2} = 10.41$$

$$A_w = 2b_f t_f = 2 \times 25 \times 1.2 = 60\ cm2$$

$$\frac{h}{t_w} < 1.1\sqrt{\frac{K_v E}{F_y}} = 35.3 \qquad then\ C_v = 1 \quad \emptyset_v = 0.9$$

$$\emptyset V_n = 0.9 \times 0.6 \times 2400 \times 60 \times 1 = 77760\ kg = 77.760\ ton > 20.5\ \ ton$$

According to above calculation The column section is ok for shear check .

11.4.4.Bolt control in shear

$$V_{max} = 20.5\ \ ton$$

$$F_{nv} = 0.45F_u = 2700\ kg$$

$$\emptyset = 0.75$$

$$A_{nb} = \frac{V_{max}}{\emptyset F_{nv}} = \frac{20500}{0.75 \times 2700} = 10.1\ cm^2 \quad USE\ 4M20(Area = 12.56cm2)$$

11.4.5.For ordinary & critical load combination

To control of maximum axial load in columns must have to analyze structure with amplified earthquake.

$$M_u = 17.17\ ton.m$$

$$P_u = 15.56\ ton$$

$$T = 8.92\ ton$$

$$qmax = \frac{15560}{30 \times 30} = 17.28\ kgf/cm2$$

$$\sigma_c = 0.65 \times 0.85 \times 300 = 165.75 \frac{kgf}{cm2} > 17.28 \frac{khf}{cm2} \quad \text{ok}$$

$$M_A = (\sigma_c \times B) \times \left(\frac{L - 0.95d}{2}\right)^2 \times \frac{1}{2}$$

$$M_A = (17.28 \times 30) \times (3.125)^2 \times 0.5 = 2531.25\ kgf.cm$$

$$Z = \frac{30t^2}{4}$$

$$S = \frac{30t^2}{6}$$

$$M_n = Z \times Fy < 1.6My = 1.6S\ Fy$$

$$7.5t^2 < 1.6 \times 5t^2 = 8t^2 \ \ ok$$

$$2531.25 = 7.5 \times 2400 * t^2 \qquad t = 0.14 \quad cm \quad \text{t=20mm}$$

11.4.6.Tension Strength control of anchor bolts :

$$d_b = 20mm$$

$$A_{nb} = 3.14\ cm2$$

$$F_{nT} = 0.75F_u = 4500kg/cm2$$

$$\emptyset = 0.75$$

$$R_{nt} = F_{nt}A_{nb} = 4500 \times 4 \times 4.52 \times 10^{-3} = 81.36\ ton$$

$$\emptyset R_{nt} = 61.02\ ton\ \geq Tu = 8.92\ ton\ ok$$

11.4.7.Shear control of Anchor Bolts:

$$Vu = \frac{\sum V}{N} = \frac{4.0}{4} = 1.0\ ton$$

$$A_{nb} = 3.14\ \ cm2$$

$$\emptyset = 0.75$$

$$F_{nv} = 0.55Fu = 3300kg/cm2$$

$$R_{nv} = F_{nv}A_{nb} = 3300 \times 3.14 \times 10^{-3} = 10.36\ ton$$

$$\emptyset R_{nv} = 10.36\ ton\ > 1.0\ \ ok$$

11.5 General requirements of embedment in concrete:

11.5.1.According to ACI318 appendix D:

Concrete breakout strength of anchor in tension : the nominal concrete breakout strength Ncbg shall not exceed

$$N_{cbg} = \frac{A_{NC}}{A_{NCO}}\omega_{ec}\omega_{ed,N}\omega_{c,N}\omega_{cp,N}N_b$$

$$A_{CNO} = 9hef^2$$

$$A_{NC} = (S1 + 3hef)(S2 + 3hef)$$

$$K_c = 10$$

$$N_b = 10\gamma_a\sqrt{f_c}h_{ef}^{1.5} = 10 \times 1 \times \sqrt{25} \times 50^{1.5} = 17.67\ KN$$

$$\lambda_{ef} = \max\left(\frac{Ca,max}{1.5}, \frac{S1}{3}, \frac{S2}{3}\right) = 53mm$$

$$C_{a,max} = \max(Ca1, Ca2, Ca3, Ca4) = 170\ mm$$

$$A_{NCO} = 9 \times 50^2 = 22500\ \ mm2$$

$$A_{NC} = (160 + 3 \times 50) \times (160 + 3 \times 50) = 96100\ mm2$$

$$\omega_{ec,N} = 1$$

$$C_{a,min} = 160\ mm$$

$$h_{ef} = 50\ mm$$

$$\omega_{ed,N} = 0.7 + 0.3 \times \frac{160}{1.5 \times 50} = 1.34$$

$$\omega_{c,N} = 1$$

$$\omega_{cp,N} = 1$$

$$N_{cbg} = \frac{A_{NC}}{A_{NCO}} \omega_{ec} \omega_{ed,N} \omega_{c,N} \omega_{cp,N} N_b = \frac{96100}{22500} \times 1 \times 1.34 \times 1.25 \times 17.67 = 126\ KN$$

$$\emptyset = 0.7$$

$$\emptyset N_{cbg} = 8.82 ton > 1.75\ \ ok$$

Concrete strength to withstand against tension in braced frame column under combination with Ω factor is acceptable.

11.5.2.Concrete breakout of anchor in shear :

The nominal concrete breakout strength Vcbg in shear shall not exceed :

$$V_{cbg} = \frac{A_{VC}}{A_{VCO}} \omega_{ec,V} \omega_{ed,V} \omega_{c,V} \omega_{h,V} V_b$$

$$A_{Vco} = 4.5 Ca1^2$$

$$\frac{A_V}{A_{Vco}} < n = 2$$

$$h_a = \min(t_f, 1.5 Ca_{1,2}) = (1600, 1.5 \times 70) = 105 mm$$

$$A_{vc} = 120 \times 90 = 10800\ mm2$$

$$A_{vco} = 4.5 Ca1^2 = 22050\ mm2$$

$$\omega_{ed,V} = 1$$

$$\omega_{e,v} = 1.4$$

$$\omega_{h,v} = \sqrt{\frac{1.5 Ca_1}{ha}} = 1$$

$$V_b = \min\left(0.6 \left(\frac{l_e}{d_a}\right)^{0.2} \sqrt{d_a}\, \lambda_a \sqrt{fc}\, Ca1^{1.5}\ , 3.7 \lambda_a \sqrt{fc}\, Ca1^{1.5}\right) = 10.83 KN$$

$$\lambda_a = 1$$

$$V_{cbg} = \frac{A_{VC}}{A_{VCO}} \omega_{ec,V} \omega_{ed,V} \omega_{c,V} \omega_{h,V} V_b = \frac{10800}{22050} \times 1 \times 1.4 \times 1 \times 10.8 = 7.4\ ton\ \ ok$$

11.5.3-REQUIRED THICKNESS

Maximum Axial Load according to SAP2000 model is about 8.13 ton Under critical load combination:

$$t = l\sqrt{\frac{2P_U}{0.9F_yBN}} = 5\sqrt{\frac{2x15560}{0.9x2400x30x30}} = 0.63\text{cm} \qquad used\ th = 2\ cm$$

$$m = \frac{N-0.95d}{2} = \frac{300-0.95*250}{2} = 31.25$$

$$n = \frac{B-0.8bf}{2} = \frac{300-0.8*250}{2} = 50$$

$$\lambda n' = \lambda\frac{\sqrt{dbf}}{4} = 1*\frac{\sqrt{24*300}}{4} = 21$$

L=max(m,n,λn)=50

12.0 FOUNDATION DESIGN

SAP2000 has been used in order to modeling, analyses and design of this foundation.

DETAILS" property of piles has been shown in the following FIG:

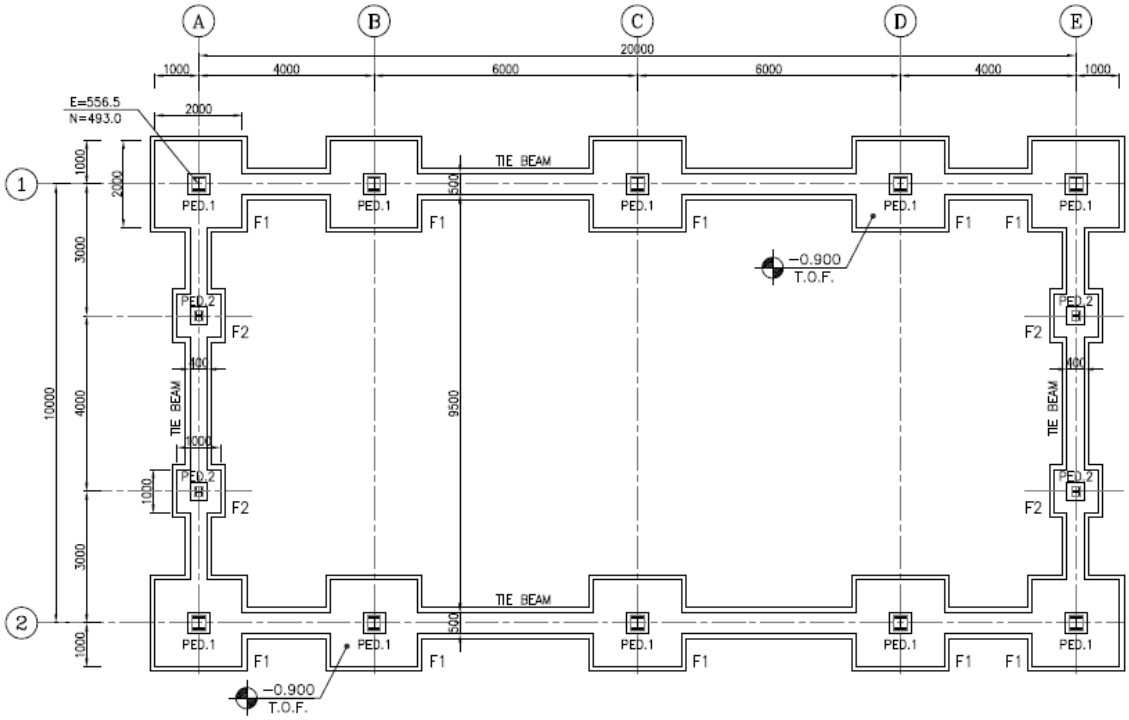

FIGURE 37-Foundation Plan

12.1 Soil pressure and settlement

According to geotechnical report for this area allowable bearing capacity is as follow:

For L/B=1 B=1 m $q_{all} = 2.75\ \frac{kg}{cm2}$, Δ_{all}= 1.75 cm , $k_s = 1.69\ kg/cm3$

For L/B=1 B=2 m $q_{all} = 2.40\ \frac{kg}{cm2}$, Δ_{all}= 2.40 cm , $k_s = 1.00\ kg/cm3$

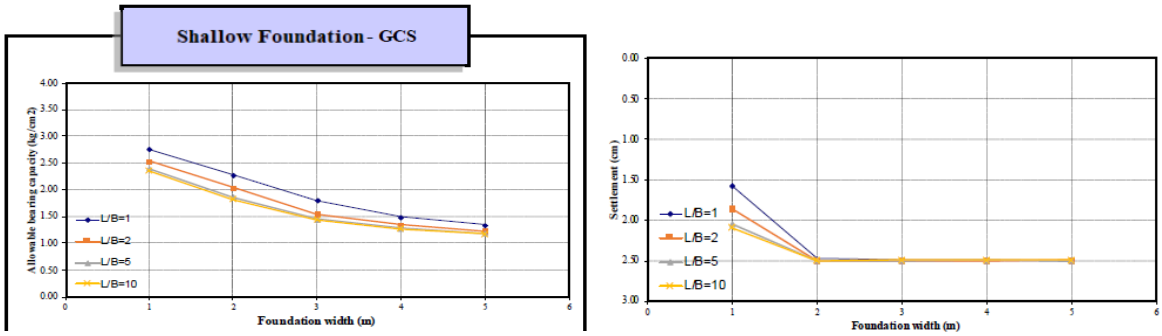

B(m)	مدول عکس‌العمل بستر پی سطحی (kg/cm3)			
	L/B=1	L/B=2	L/B=5	L/B=10
1.0	1.69	1.33	1.14	1.09
2.0	1.00	0.85	0.78	0.77
3.0	0.78	0.69	0.65	0.64
4.0	0.68	0.60	0.57	0.57
5.0	0.61	0.55	0.53	0.53

FIGURE 38-geotechnical parameters

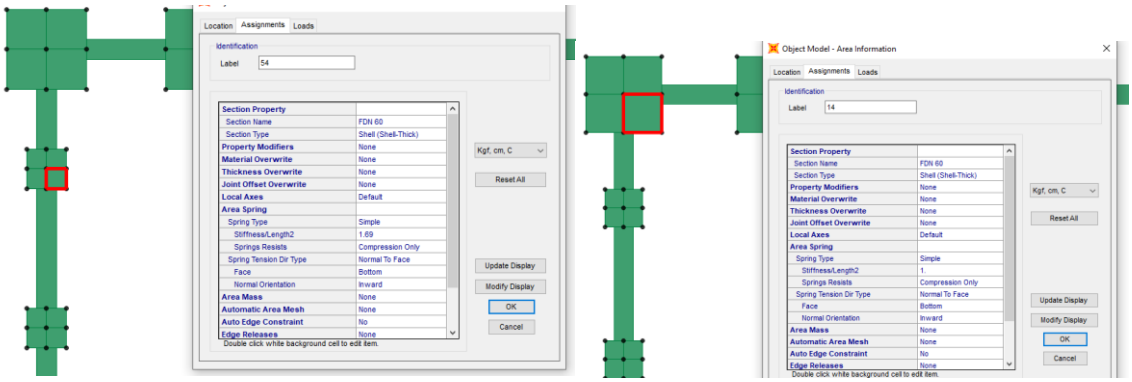

FIGURE 39-Assign Spring to Foundation(B=1m (ks=1.69kg/cm3)&B=2m(ks=1kg/cm3))

12.2 DESIGN

Concrete Foundation are designed according to ACI 318-14. Required loads are derived from SAP data, and design process will be done according to ACI code based on ultimate strength procedure.

$f'_c = 30\text{Mpa}$, $f_y = 400\text{Ma}$

The weight of Soil apply in foundation Model. Weights of this part is shown through the following figure

Soil dead load is $\gamma h = 1.85 \times 0.9 = 1.665 \frac{ton}{m2} = 1665 \frac{kg}{m2}$

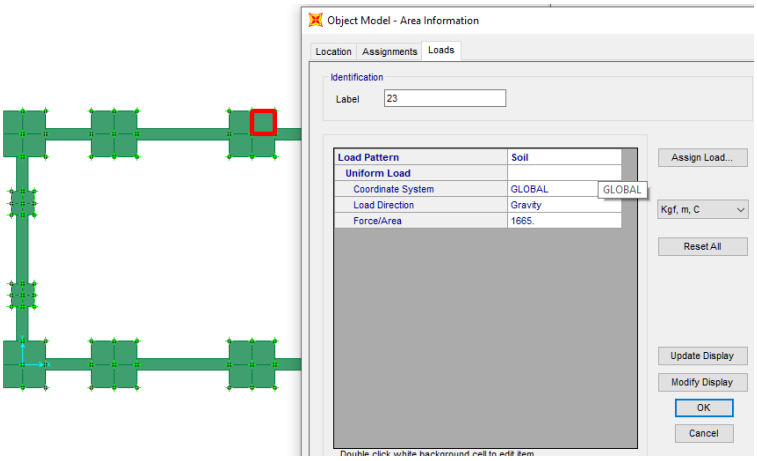

FIGURE 40-Applied soil load on Foundation (Soil:1665 kg/m2)

12.3 FOUNDATION DESIGN CONTROL

12.3.1 CHECK OF DISPLACEMENT OF FOUNDATION

TABLE: Joint Displacements					
Joint	OutputCase	CaseType	U3	KS	Soil Pressure
Text	Text	Text	cm	kg/cm3	kg/cm2
172	Env- allowable	Combination	-0.168915	1.69	0.285
172	Env- allowable	Combination	-0.378349	1.69	0.639
173	Env- allowable	Combination	-0.178069	1.69	0.301
173	Env- allowable	Combination	-0.417572	1.69	0.706
174	Env- allowable	Combination	-0.176702	1.69	0.299
174	Env- allowable	Combination	-0.435625	1.69	0.736
175	Env- allowable	Combination	-0.167385	1.69	0.283
175	Env- allowable	Combination	-0.392064	1.69	0.663
177	Env- allowable	Combination	-0.168181	1.69	0.284
177	Env- allowable	Combination	-0.382568	1.69	0.647
179	Env- allowable	Combination	-0.177413	1.69	0.300
179	Env- allowable	Combination	-0.425056	1.69	0.718
204	Env- allowable	Combination	-0.17225	1.69	0.291
204	Env- allowable	Combination	-0.403999	1.69	0.683
205	Env- allowable	Combination	-0.12661	1.69	0.214
205	Env- allowable	Combination	-0.441077	1.69	0.745
208	Env- allowable	Combination	-0.114588	1.69	0.194
208	Env- allowable	Combination	-0.449227	1.69	0.759
211	Env- allowable	Combination	-0.172874	1.69	0.292
211	Env- allowable	Combination	-0.403745	1.69	0.682
216	Env- allowable	Combination	-0.173568	1.69	0.293
216	Env- allowable	Combination	-0.396878	1.69	0.671
218	Env- allowable	Combination	-0.17222	1.69	0.291
218	Env- allowable	Combination	-0.414749	1.69	0.701
219	Env- allowable	Combination	-0.166122	1.69	0.281
219	Env- allowable	Combination	-0.392681	1.69	0.664
220	Env- allowable	Combination	-0.176758	1.69	0.299
220	Env- allowable	Combination	-0.435231	1.69	0.736
221	Env- allowable	Combination	-0.178092	1.69	0.301
221	Env- allowable	Combination	-0.417429	1.69	0.705
222	Env- allowable	Combination	-0.167615	1.69	0.283
222	Env- allowable	Combination	-0.379593	1.69	0.642
223	Env- allowable	Combination	-0.166896	1.69	0.282

223	Env- allowable	Combination	-0.383749	1.69	0.649
224	Env- allowable	Combination	-0.177452	1.69	0.300
224	Env- allowable	Combination	-0.424805	1.69	0.718
225	Env- allowable	Combination	-0.171616	1.69	0.290
225	Env- allowable	Combination	-0.414856	1.69	0.701
226	Env- allowable	Combination	-0.17293	1.69	0.292
226	Env- allowable	Combination	-0.397234	1.69	0.671
227	Env- allowable	Combination	-0.167455	1.69	0.283
227	Env- allowable	Combination	-0.414444	1.69	0.700
228	Env- allowable	Combination	-0.078536	1.69	0.133
228	Env- allowable	Combination	-0.467397	1.69	0.790
229	Env- allowable	Combination	-0.059803	1.69	0.101
229	Env- allowable	Combination	-0.494013	1.69	0.835
230	Env- allowable	Combination	-0.149126	1.69	0.252
230	Env- allowable	Combination	-0.443602	1.69	0.750
231	Env- allowable	Combination	-0.159203	1.69	0.269
231	Env- allowable	Combination	-0.426894	1.69	0.721
232	Env- allowable	Combination	-0.070099	1.69	0.118
232	Env- allowable	Combination	-0.478691	1.69	0.809
233	Env- allowable	Combination	-0.122719	1.69	0.207
233	Env- allowable	Combination	-0.438652	1.69	0.741
234	Env- allowable	Combination	-0.10409	1.69	0.176
234	Env- allowable	Combination	-0.465472	1.69	0.787
235	Env- allowable	Combination	-0.162159	1.69	0.274
235	Env- allowable	Combination	-0.433903	1.69	0.733
236	Env- allowable	Combination	-0.079234	1.69	0.134
236	Env- allowable	Combination	-0.480669	1.69	0.812
237	Env- allowable	Combination	-0.089749	1.69	0.152
237	Env- allowable	Combination	-0.459941	1.69	0.777
238	Env- allowable	Combination	-0.172867	1.69	0.292
238	Env- allowable	Combination	-0.410432	1.69	0.694
239	Env- allowable	Combination	-0.168132	1.69	0.284
239	Env- allowable	Combination	-0.420248	1.69	0.710
240	Env- allowable	Combination	-0.085125	1.69	0.144
240	Env- allowable	Combination	-0.468541	1.69	0.792
241	Env- allowable	Combination	-0.120432	1.69	0.204
241	Env- allowable	Combination	-0.453956	1.69	0.767
242	Env- allowable	Combination	-0.131183	1.69	0.222
242	Env- allowable	Combination	-0.433007	1.69	0.732

According to above output, Max soil pressure under the foundation with B=1m is:

$$q_n = 0.494 \times 1.69 = 0.835\ \mathrm{kg/cm^2} \ < \ 2.75\ \mathrm{kg/cm^2} \quad \mathrm{ok}$$

TABLE: Joint Displacements					
Joint	OutputCase	CaseType	U3	KS	Soil Pressure
Text	Text	Text	cm	kg/cm3	kg/cm2
22	Env- allowable	Combination	-0.08404	1	0.084
22	Env- allowable	Combination	-0.549075	1	0.549
44	Env- allowable	Combination	-0.10711	1	0.107
44	Env- allowable	Combination	-0.645705	1	0.646
48	Env- allowable	Combination	-0.162648	1	0.163
48	Env- allowable	Combination	-0.699169	1	0.699
49	Env- allowable	Combination	-0.168076	1	0.168
49	Env- allowable	Combination	-0.66726	1	0.667
50	Env- allowable	Combination	-0.156508	1	0.157
50	Env- allowable	Combination	-0.499652	1	0.500
51	Env- allowable	Combination	-0.036666	1	0.037
51	Env- allowable	Combination	-0.584189	1	0.584
52	Env- allowable	Combination	-0.111296	1	0.111
52	Env- allowable	Combination	-0.63669	1	0.637
53	Env- allowable	Combination	-0.176278	1	0.176
53	Env- allowable	Combination	-0.690913	1	0.691
54	Env- allowable	Combination	-0.187263	1	0.187
54	Env- allowable	Combination	-0.666	1	0.666
60	Env- allowable	Combination	-0.156851	1	0.157
60	Env- allowable	Combination	-0.50104	1	0.501
61	Env- allowable	Combination	-0.15624	1	0.156
61	Env- allowable	Combination	-0.414043	1	0.414
62	Env- allowable	Combination	-0.178799	1	0.179
62	Env- allowable	Combination	-0.507912	1	0.508
63	Env- allowable	Combination	-0.155895	1	0.156
63	Env- allowable	Combination	-0.585596	1	0.586
64	Env- allowable	Combination	-0.134032	1	0.134
64	Env- allowable	Combination	-0.4897	1	0.490
69	Env- allowable	Combination	-0.193844	1	0.194
69	Env- allowable	Combination	-0.567793	1	0.568
95	Env- allowable	Combination	-0.196032	1	0.196
95	Env- allowable	Combination	-0.630491	1	0.630

96	Env- allowable	Combination	-0.17542	1	0.175
96	Env- allowable	Combination	-0.752697	1	0.753
97	Env- allowable	Combination	-0.166768	1	0.167
97	Env- allowable	Combination	-0.695334	1	0.695
98	Env- allowable	Combination	-0.195857	1	0.196
98	Env- allowable	Combination	-0.645984	1	0.646
99	Env- allowable	Combination	-0.151249	1	0.151
99	Env- allowable	Combination	-0.655984	1	0.656
100	Env- allowable	Combination	-0.15486	1	0.155
100	Env- allowable	Combination	-0.737422	1	0.737
101	Env- allowable	Combination	-0.163318	1	0.163
101	Env- allowable	Combination	-0.757562	1	0.758
102	Env- allowable	Combination	-0.060351	1	0.060
102	Env- allowable	Combination	-0.661912	1	0.662
103	Env- allowable	Combination	-0.117984	1	0.118
103	Env- allowable	Combination	-0.5632	1	0.563
104	Env- allowable	Combination	-0.160319	1	0.160
104	Env- allowable	Combination	-0.595073	1	0.595
105	Env- allowable	Combination	-0.121068	1	0.121
105	Env- allowable	Combination	-0.694874	1	0.695
106	Env- allowable	Combination	-0.158183	1	0.158
106	Env- allowable	Combination	-0.489927	1	0.490
107	Env- allowable	Combination	0.02974	1	0.030
107	Env- allowable	Combination	-0.590829	1	0.591
108	Env- allowable	Combination	0.082506	1	0.083
108	Env- allowable	Combination	-0.671599	1	0.672
109	Env- allowable	Combination	-0.106858	1	0.107
109	Env- allowable	Combination	-0.581605	1	0.582
110	Env- allowable	Combination	-0.132626	1	0.133
110	Env- allowable	Combination	-0.488437	1	0.488
111	Env- allowable	Combination	-0.156964	1	0.157
111	Env- allowable	Combination	-0.582426	1	0.582
112	Env- allowable	Combination	-0.179493	1	0.179
112	Env- allowable	Combination	-0.506442	1	0.506
113	Env- allowable	Combination	-0.154497	1	0.154
113	Env- allowable	Combination	-0.41442	1	0.414
114	Env- allowable	Combination	-0.146558	1	0.147
114	Env- allowable	Combination	-0.690034	1	0.690
115	Env- allowable	Combination	-0.147712	1	0.148

115	Env- allowable	Combination	-0.754083	1	0.754
116	Env- allowable	Combination	-0.190522	1	0.191
116	Env- allowable	Combination	-0.632288	1	0.632
117	Env- allowable	Combination	-0.189312	1	0.189
117	Env- allowable	Combination	-0.568277	1	0.568
118	Env- allowable	Combination	-0.137571	1	0.138
118	Env- allowable	Combination	-0.776591	1	0.777
119	Env- allowable	Combination	-0.137653	1	0.138
119	Env- allowable	Combination	-0.752534	1	0.753
120	Env- allowable	Combination	-0.167237	1	0.167
120	Env- allowable	Combination	-0.649136	1	0.649
121	Env- allowable	Combination	-0.182282	1	0.182
121	Env- allowable	Combination	-0.639669	1	0.640
122	Env- allowable	Combination	-0.102723	1	0.103
122	Env- allowable	Combination	-0.713953	1	0.714
123	Env- allowable	Combination	-0.149448	1	0.149
123	Env- allowable	Combination	-0.61713	1	0.617
124	Env- allowable	Combination	-0.126163	1	0.126
124	Env- allowable	Combination	-0.56232	1	0.562
125	Env- allowable	Combination	-0.078002	1	0.078
125	Env- allowable	Combination	-0.657645	1	0.658
126	Env- allowable	Combination	-0.155526	1	0.156
126	Env- allowable	Combination	-0.547018	1	0.547
127	Env- allowable	Combination	0.007588	1	0.008
127	Env- allowable	Combination	-0.616095	1	0.616
128	Env- allowable	Combination	-0.016032	1	0.016
128	Env- allowable	Combination	-0.558719	1	0.559
129	Env- allowable	Combination	-0.178248	1	0.178
129	Env- allowable	Combination	-0.476026	1	0.476
130	Env- allowable	Combination	-0.166655	1	0.167
130	Env- allowable	Combination	-0.462418	1	0.462
131	Env- allowable	Combination	-0.146092	1	0.146
131	Env- allowable	Combination	-0.452002	1	0.452
132	Env- allowable	Combination	-0.144562	1	0.145
132	Env- allowable	Combination	-0.538399	1	0.538
133	Env- allowable	Combination	-0.168491	1	0.168
133	Env- allowable	Combination	-0.547505	1	0.548
134	Env- allowable	Combination	-0.194126	1	0.194
134	Env- allowable	Combination	-0.602356	1	0.602

135	Env- allowable	Combination	-0.186314	1	0.186
135	Env- allowable	Combination	-0.632174	1	0.632
136	Env- allowable	Combination	-0.172858	1	0.173
136	Env- allowable	Combination	-0.728242	1	0.728
137	Env- allowable	Combination	-0.190256	1	0.190
137	Env- allowable	Combination	-0.688661	1	0.689
138	Env- allowable	Combination	-0.177298	1	0.177
138	Env- allowable	Combination	-0.649463	1	0.649
139	Env- allowable	Combination	-0.182057	1	0.182
139	Env- allowable	Combination	-0.694173	1	0.694
140	Env- allowable	Combination	-0.15798	1	0.158
140	Env- allowable	Combination	-0.748523	1	0.749
141	Env- allowable	Combination	-0.17347	1	0.173
141	Env- allowable	Combination	-0.697218	1	0.697
142	Env- allowable	Combination	-0.080807	1	0.081
142	Env- allowable	Combination	-0.619097	1	0.619
143	Env- allowable	Combination	-0.093558	1	0.094
143	Env- allowable	Combination	-0.677359	1	0.677
144	Env- allowable	Combination	-0.141848	1	0.142
144	Env- allowable	Combination	-0.650847	1	0.651
145	Env- allowable	Combination	-0.151168	1	0.151
145	Env- allowable	Combination	-0.577794	1	0.578
146	Env- allowable	Combination	-0.064785	1	0.065
146	Env- allowable	Combination	-0.535007	1	0.535
147	Env- allowable	Combination	-0.131352	1	0.131
147	Env- allowable	Combination	-0.538136	1	0.538
148	Env- allowable	Combination	-0.012356	1	0.012
148	Env- allowable	Combination	-0.626773	1	0.627
149	Env- allowable	Combination	0.057709	1	0.058
149	Env- allowable	Combination	-0.633754	1	0.634
150	Env- allowable	Combination	-0.144414	1	0.144
150	Env- allowable	Combination	-0.53614	1	0.536
151	Env- allowable	Combination	-0.144493	1	0.144
151	Env- allowable	Combination	-0.451605	1	0.452
152	Env- allowable	Combination	-0.166167	1	0.166
152	Env- allowable	Combination	-0.461801	1	0.462
153	Env- allowable	Combination	-0.169347	1	0.169
153	Env- allowable	Combination	-0.545235	1	0.545
154	Env- allowable	Combination	-0.146117	1	0.146

154	Env- allowable	Combination	-0.7253	1	0.725
155	Env- allowable	Combination	-0.168613	1	0.169
155	Env- allowable	Combination	-0.628696	1	0.629
156	Env- allowable	Combination	-0.189136	1	0.189
156	Env- allowable	Combination	-0.603968	1	0.604
157	Env- allowable	Combination	-0.170254	1	0.170
157	Env- allowable	Combination	-0.693957	1	0.694
158	Env- allowable	Combination	-0.135914	1	0.136
158	Env- allowable	Combination	-0.765927	1	0.766
159	Env- allowable	Combination	-0.166407	1	0.166
159	Env- allowable	Combination	-0.706922	1	0.707
160	Env- allowable	Combination	-0.176924	1	0.177
160	Env- allowable	Combination	-0.642948	1	0.643
161	Env- allowable	Combination	-0.16011	1	0.160
161	Env- allowable	Combination	-0.705017	1	0.705
162	Env- allowable	Combination	-0.119859	1	0.120
162	Env- allowable	Combination	-0.671218	1	0.671
163	Env- allowable	Combination	-0.092832	1	0.093
163	Env- allowable	Combination	-0.685058	1	0.685
164	Env- allowable	Combination	-0.094663	1	0.095
164	Env- allowable	Combination	-0.61625	1	0.616
165	Env- allowable	Combination	-0.141262	1	0.141
165	Env- allowable	Combination	-0.58869	1	0.589
166	Env- allowable	Combination	-0.07419	1	0.074
166	Env- allowable	Combination	-0.581352	1	0.581
167	Env- allowable	Combination	-0.165519	1	0.166
167	Env- allowable	Combination	-0.51407	1	0.514
168	Env- allowable	Combination	-0.097932	1	0.098
168	Env- allowable	Combination	-0.510262	1	0.510
169	Env- allowable	Combination	-0.002588	1	0.003
169	Env- allowable	Combination	-0.590051	1	0.590
		Max	-0.776591		

$$q_n = 0.7765 \times 1.0 = 0.777\ \mathrm{kg/cm^2} \ < \ 2.4\ \mathrm{kg/cm^2} \quad \mathrm{ok}$$

12.3.2. CHECK OF DISPLACEMENT FOR FOUNDATION

According to above outputs, Max soil displacement under the foundation is:

for foundation with $B = 1m$: $d_n = 0.494cm < 2.5 \ cm$ ok

for foundation with $B = 2m$: $d_n = 0.77cm < 2.5 \ cm$ ok

12.3.3 REINFORCING CONTROL

Minimum rebar for foundation :

$$A_{s\,min} = 0.0018bh$$

$$A_{smin} = \frac{1}{2}0.0018\,bh = \frac{1}{2}0.0018 \times 100 \times 60 = 5.4 \quad cm^2/m$$

$$A_{s\,used} = \emptyset 16@200 = 10.05cm^2$$

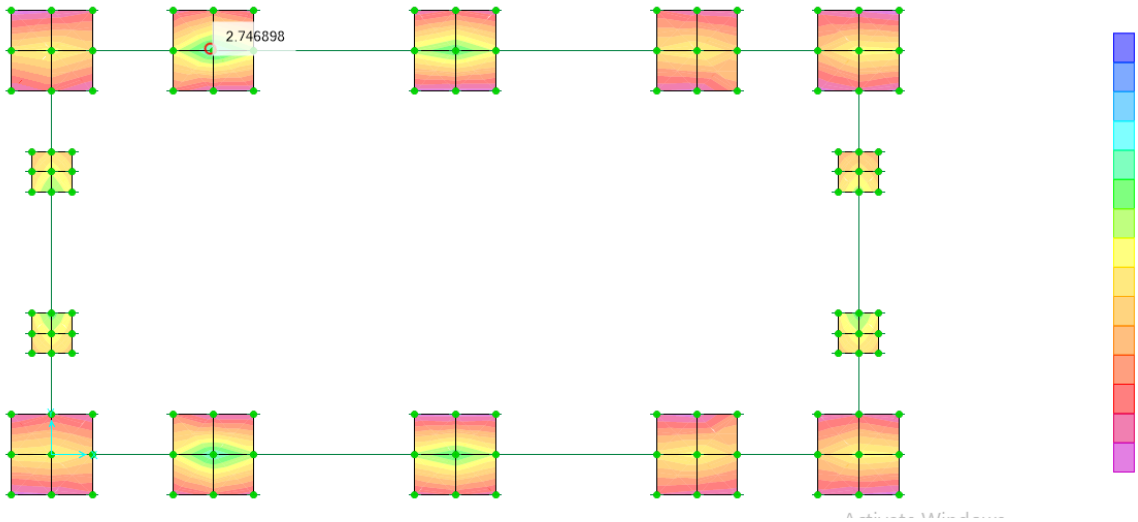

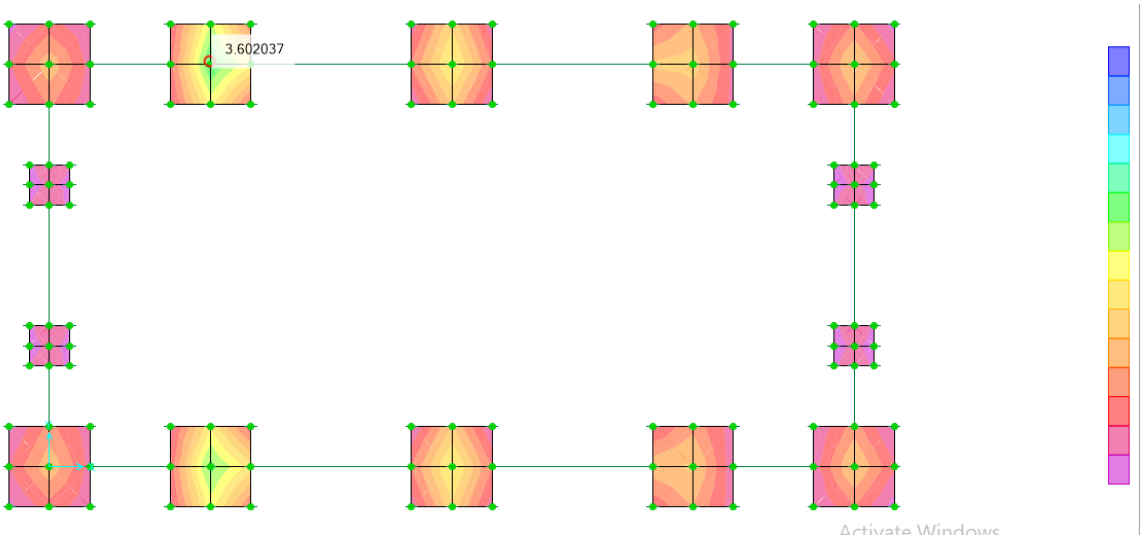

FIGURE 41-M22 & M11 result

According to above figures max Moment is about 2.6 ton.m= 260000.0 kg-cm

$Mu_1 = 2600000\ \ kg.cm$
$b = 100\ cm$
$f_c = 300$
$f_y = 4000$
$d = 54cm$
$\emptyset = 0.9$

$$M_n = \frac{M_u}{\emptyset} = 288888.889\ kg.cm$$

$$R_{n1} = \frac{M_{n1}}{b.d^2} = 0.991$$

$$m_1 = \frac{f_y}{0.85 f_c} = 15.686$$

$$\rho_{req} = \frac{1}{m_1}\left(1 - \sqrt{1 - \frac{2m_1 R_{n1}}{f_y}}\right) = 0.000248$$

$A_{s(req)} = \rho_{req}.b.d = 1.340 \quad used\ \ \emptyset 16@\ 200 \quad$ (top & bot)

As						
INPUT	Mu(ton.m)	b(cm)	d(cm)	Fy (kg/cm^2)	fc(kg/cm^2)	phi
	2.6	100	54	4000	300	0.9
OUTPUT	Mn	Rn1	m1	ρ_{req}	As(req)	use phi
	288888.889	0.991	15.686	0.000248	1.340	16.000

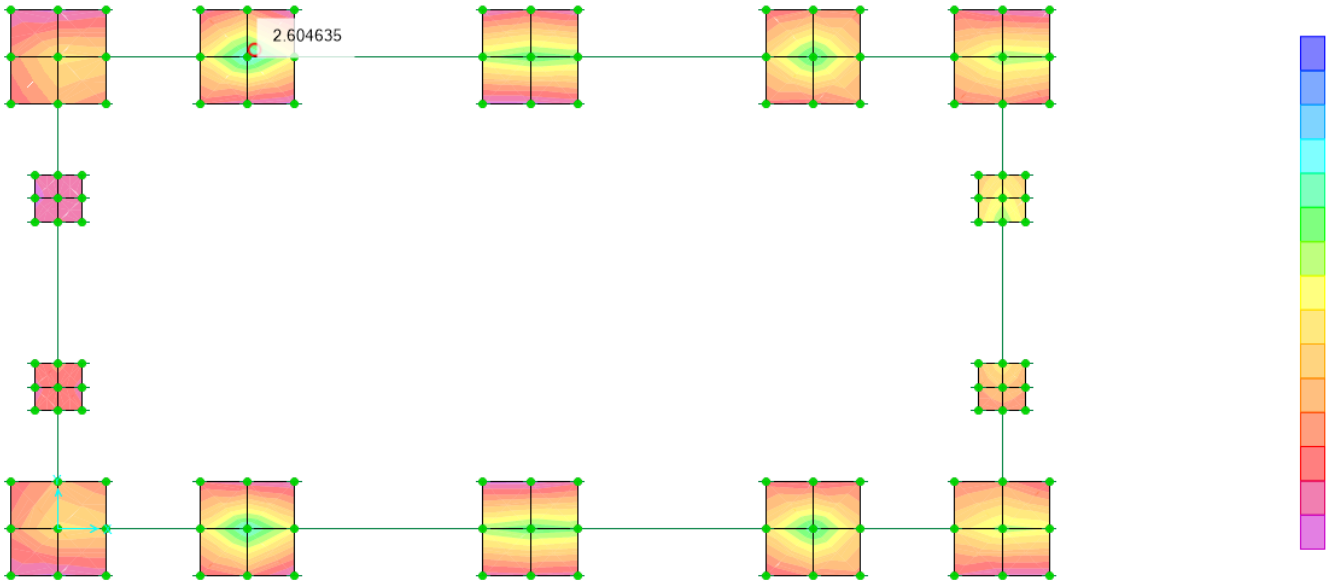

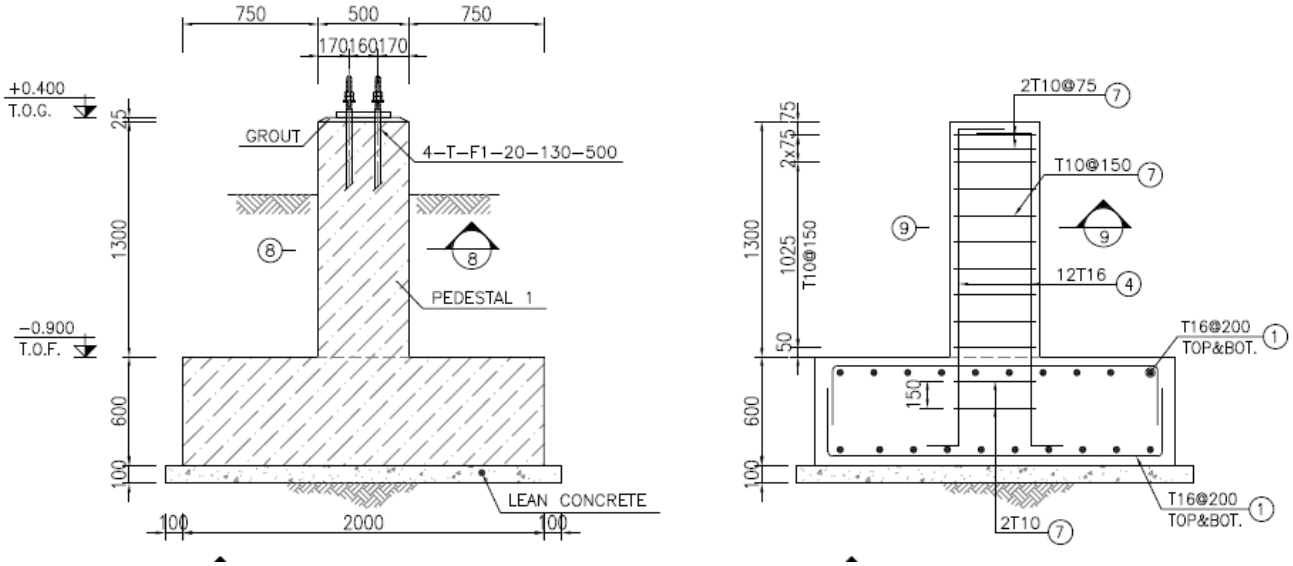

FIGURE 42-Reinforcement(Ø16@ 200)

- **PEDESTAL DESIGN**

Pedestal details can be seen in below Figure:

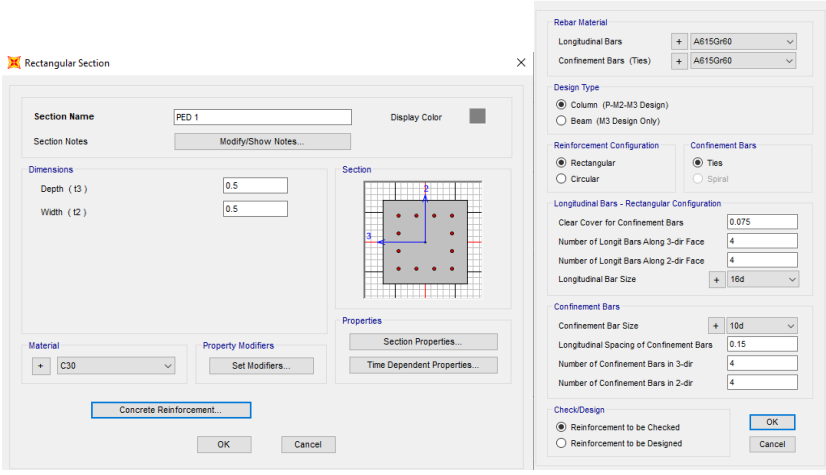

FIGURE 43- Pedestal reinforcement detail (Ped1-50x50)

Because the all pedestals have been modeled by the whole structure in the SAP file so P-Mx-My interaction of pedestal can be checked based on SAP file. As can be seen in Below Figure the P-M interaction ratio is located allowable.

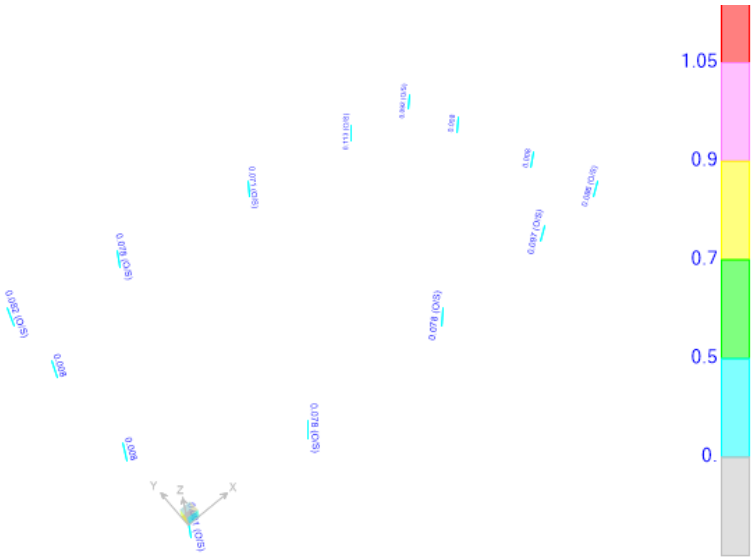

FIGURE 44- pedestal design

TABLE: Concrete Design 1 - Column Summary Data - ACI 318-11

Frame	DesignSect	DesignType	DesignOpt	Status	Location	PMMRatio	
Text	Text	Text	Text	Text	m	Unitless	<1
23	PED 1	Column	Check	No Messages	0	0.031742	OK
23	PED 1	Column	Check	No Messages	0.4	0.046673	OK
23	PED 1	Column	Check	No Messages	0.8	0.086026	OK
24	PED 1	Column	Check	No Messages	0	0.025824	OK
24	PED 1	Column	Check	No Messages	0.4	0.051279	OK
24	PED 1	Column	Check	No Messages	0.8	0.096551	OK
46	PED 1	Column	Check	No Messages	0	0.039772	OK
46	PED 1	Column	Check	No Messages	0.4	0.049568	OK
46	PED 1	Column	Check	No Messages	0.8	0.077547	OK
47	PED 1	Column	Check	No Messages	0	0.040852	OK
47	PED 1	Column	Check	No Messages	0.4	0.04961	OK
47	PED 1	Column	Check	No Messages	0.8	0.077832	OK
95	PED 1	Column	Check	No Messages	0	0.031941	OK
95	PED 1	Column	Check	No Messages	0.4	0.048419	OK
95	PED 1	Column	Check	No Messages	0.8	0.090562	OK
96	PED 1	Column	Check	No Messages	0	0.032292	OK
96	PED 1	Column	Check	No Messages	0.4	0.049982	OK
96	PED 1	Column	Check	No Messages	0.8	0.09214	OK
97	PED 1	Column	Check	No Messages	0	0.025824	OK
97	PED 1	Column	Check	No Messages	0.4	0.062317	OK
97	PED 1	Column	Check	No Messages	0.8	0.113038	OK
98	PED 1	Column	Check	No Messages	0	0.037629	OK
98	PED 1	Column	Check	No Messages	0.4	0.046173	OK
98	PED 1	Column	Check	No Messages	0.8	0.071122	OK
103	PED 1	Column	Check	No Messages	0	0.043502	OK
103	PED 1	Column	Check	No Messages	0.4	0.051341	OK
103	PED 1	Column	Check	No Messages	0.8	0.077832	OK
104	PED 1	Column	Check	No Messages	0	0.03006	OK
104	PED 1	Column	Check	No Messages	0.4	0.044182	OK
104	PED 1	Column	Check	No Messages	0.8	0.081544	OK
124	PED2	Column	Check	No Messages	0	0.001516	OK
124	PED2	Column	Check	No Messages	0.4	0.003961	OK
124	PED2	Column	Check	No Messages	0.8	0.007869	OK
126	PED2	Column	Check	No Messages	0	0.001516	OK
126	PED2	Column	Check	No Messages	0.4	0.003955	OK
126	PED2	Column	Check	No Messages	0.8	0.007825	OK

128	PED2	Column	Check	No Messages	0	0.001516	OK
128	PED2	Column	Check	No Messages	0.4	0.003968	OK
128	PED2	Column	Check	No Messages	0.8	0.007851	OK
130	PED2	Column	Check	No Messages	0	0.001516	OK
130	PED2	Column	Check	No Messages	0.4	0.00396	OK
130	PED2	Column	Check	No Messages	0.8	0.007834	OK