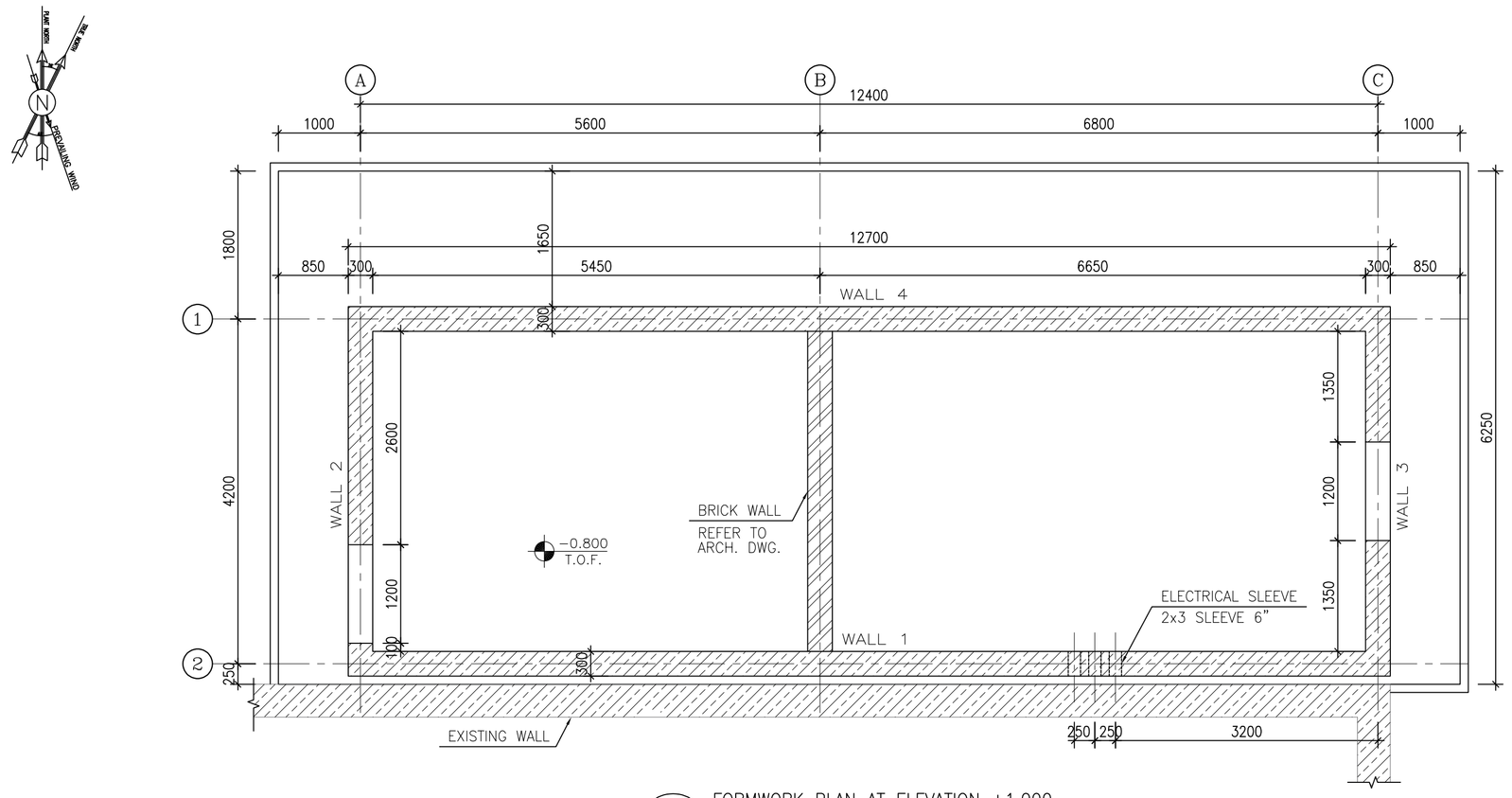

1:50 (1) FORMWORK PLAN AT ELEVATION +1.000
CAPACITOR BANK
CO2 ROOM

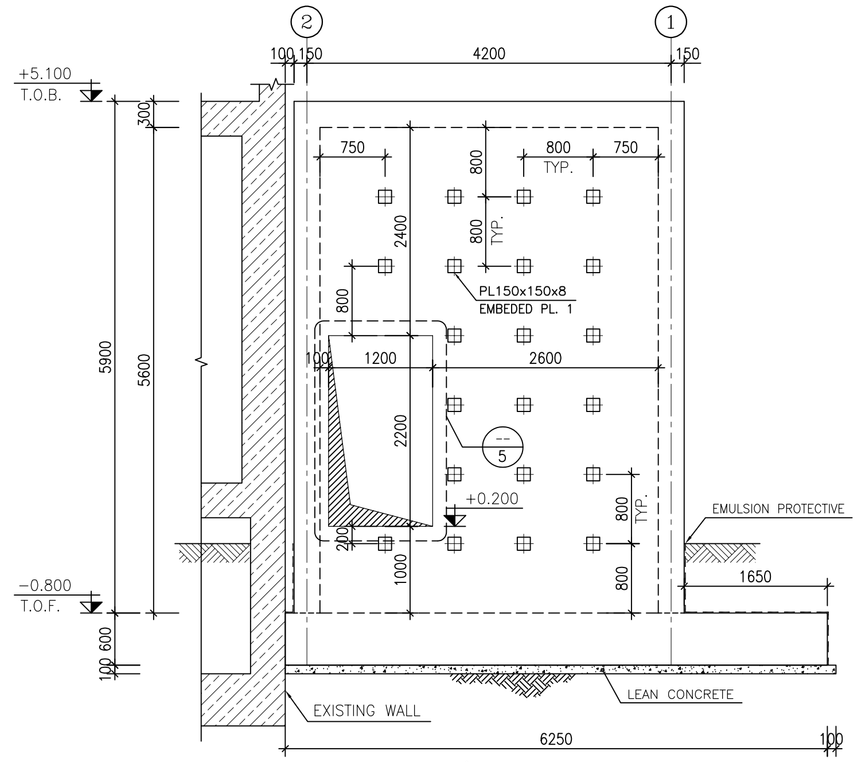

1:50 (3) WALL 2
FORMWORK

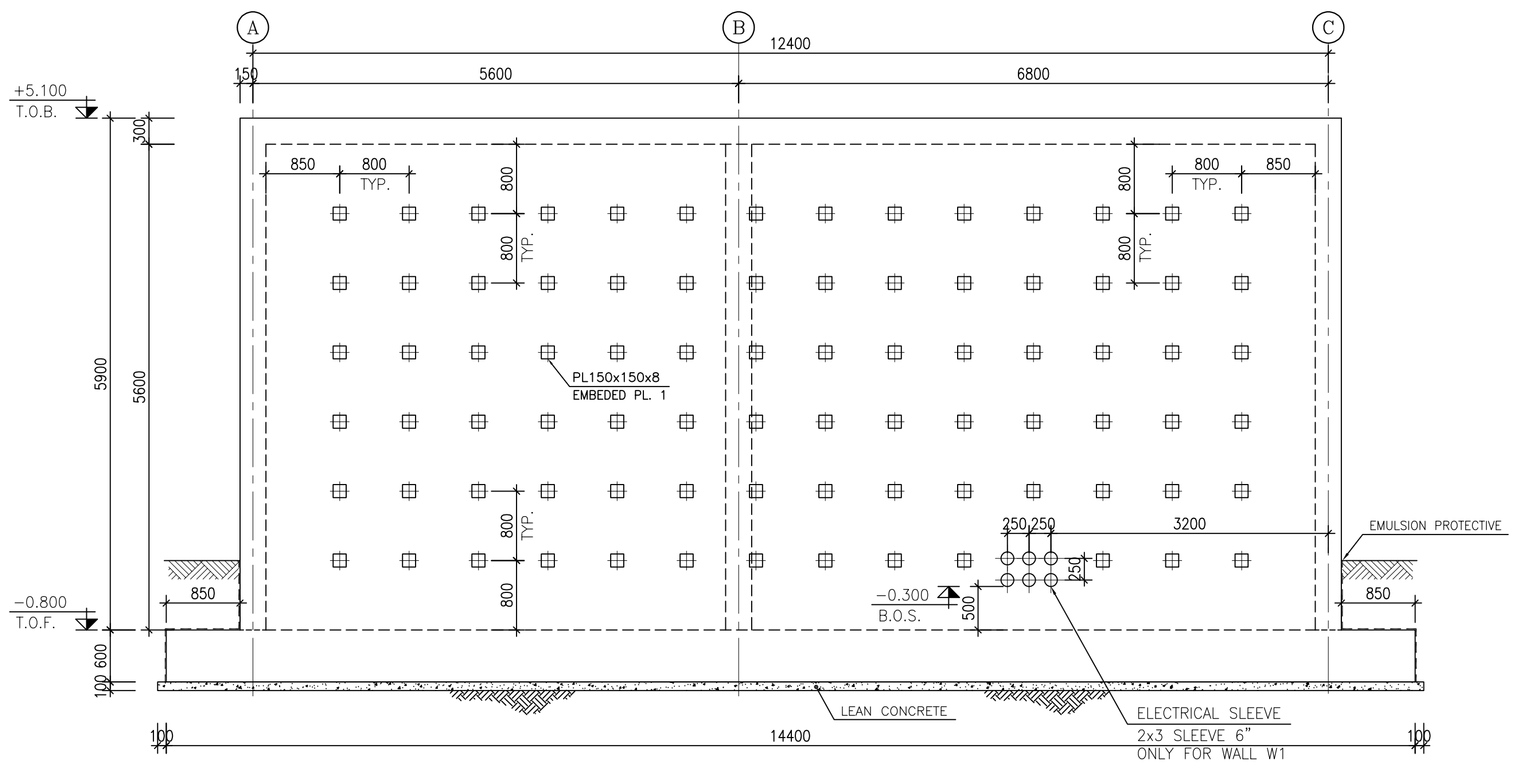

1:50 (2) WALL 1&4
FORMWORK

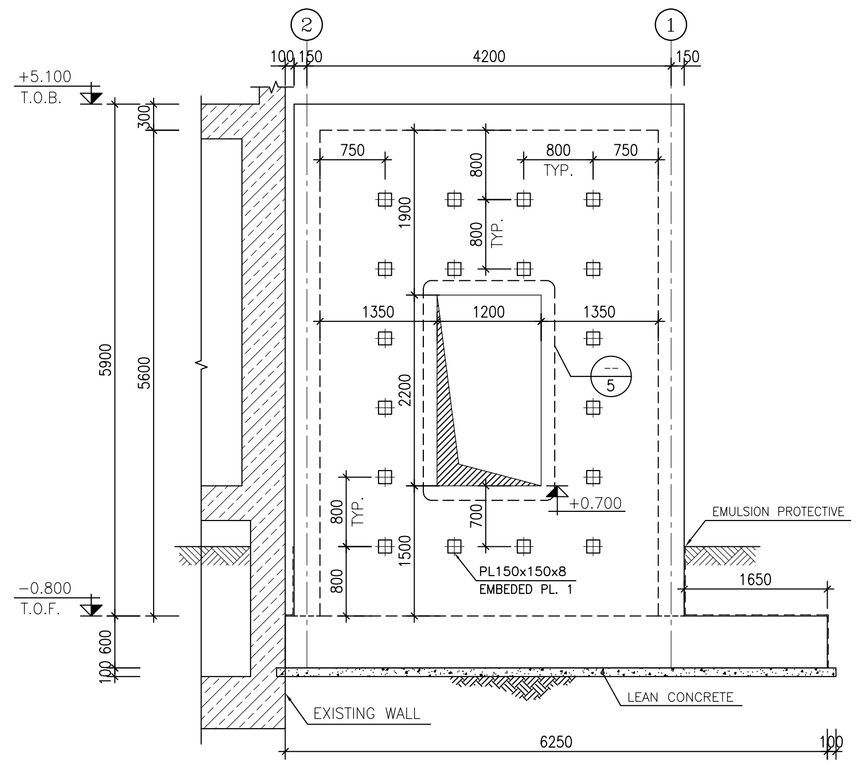

1:50 (4) WALL 3
FORMWORK

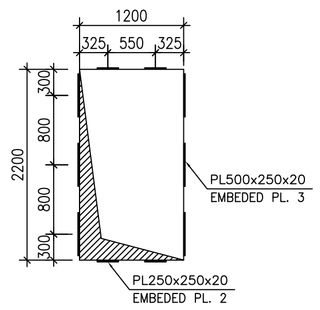

1:50 (5)

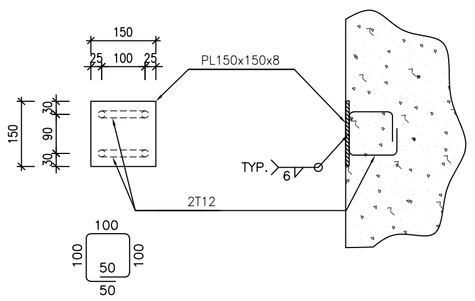

1:100 (6) EMBEDED PLATE 1

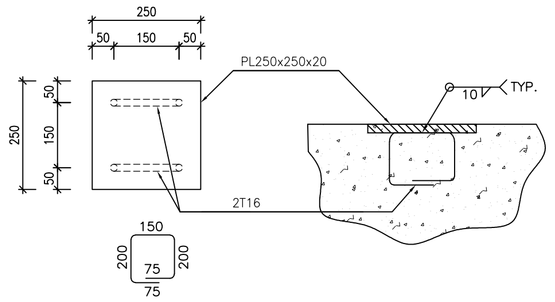

1:100 (7) EMBEDED PLATE 2

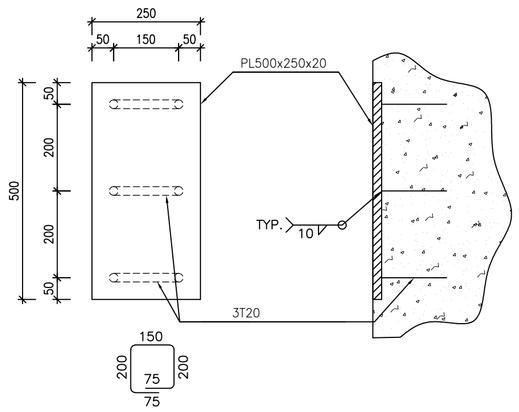

1:100 (8) EMBEDED PLATE 3

D02

NOTES

1) ALL ELEVATIONS AND COORDINATES ARE IN "m" AND DIMENSIONS ARE IN "mm" UNLESS OTHERWISE NOTED.
2) ALL DIMENSIONS AND ELEVATIONS SHALL BE CHECKED BY THE CONTRACTOR PRIOR TO CONSTRUCTION.
3) STRUCTURAL STEEL SHAPE & PLATES SHALL CONFORM TO S235JR WITH MINIMUM YIELD STRESS OF Fy=2400 kg/cm².
4) ALL BOLTS ARE HIGH STRENGTH BOLTS GRADE 8.8 WITH MINIMUM TENSILE STRENGTH OF Fu=800 MPa.
5) ANCHOR BOLTS SHALL BE ASTM A307 GRADE C.
6) ALL WELDING SHALL BE IN ACCORDANCE WITH THE LATEST EDITION OF STRUCTURAL WELDING CODE, AWS D1.1/D1.1M.
7) TYPE OF WELDING ELECTRODE SHALL BE E70 AND IN ACCORDANCE WITH SPECIFICATION FOR STRUCTURAL STEEL FABRICATION AND ERECTION.
8) FLANGES SHOULD BE CONTINUOUSLY WELDED TO THE WEB.
9) WELDING SPLICE SHALL BE PROVIDED AT SHOP AND NOT PERMITTED AT FIELD.
10) COLUMN SPLICE ELEVATION SHALL BE LOCATED 1.2m OR MORE AWAY FROM THE BEAM-TO-COLUMN CONNECTIONS.
11) 28 DAYS CHARACTERISTIC COMPRESSIVE STRENGTH OF CONCRETE IS 30MPa. (ON CYLINDRICAL SPECIMEN)
12) 28 DAYS CHARACTERISTIC COMPRESSIVE STRENGTH OF LEAN CONCRETE IS 15MPa. (ON CYLINDRICAL SPECIMEN)
13) CONCRETE COVER OVER BARS SHALL BE 75mm FOR FOUNDATION AND 40mm FOR CAST IN-SITU OTHER PARTS.
14) CEMENT TYPE II SHALL BE USED ACCORDING TO GEOTECHNICAL REPORT SUGGESTION.
15) FILL MATERIAL SHALL BE COMPACTED TO NOT LESS THAN 95% OF THE MAXIMUM DENSITY AS DETERMINED BY ASTM D-1557 & ASTM D-1241 (MODIFIED PROCTOR) METHOD.
16) THE EMULSION SHOULD BE USED ON CONCRETE EXPOSED WITH SOIL. B-90-COAT.M.E IS A BITUMEN-BASED ONE-COMPONENT EMULSION PROTECTIVE COATING TO PREVENT THE PENETRATION OF DESTRUCTIVE SALTS & IONS.
THIS MATERIAL IS CONTROLLED ACCORDING TO THE FOLLOWING STANDARDS: ASTM D1227, ASTM D2939, ASTM D1640

±0.00 = +11.10(F.G.L)MSL

D02

LEGEND

F.G.L. : FINISH GROUND LEVEL
T.O.B. : TOP OF BEAM
T.O.F. : TOP OF FOUNDATION
B.O.B.PL. : BOTTOM OF BASE PLATE
C.O.ST. : CENTER OF STRUT
T.O.CR. : TOP OF CRANE
T.O.BR. : TOP OF BROCKET
C.O.ST. : CENTER OF STRUT
N.T.S : NOT TO SCALED

REINFORCED CONCRETE
LEAN CONCRETE
GROUND
BRICK WALL

REFERENCE DRAWING	DRG. No.
CALCULATION REPORT FOR EXTENTION ELECT. BUILDING	BK-GCS-PEDCO-120-ST-CN-0005
FOUNDATION DRAWING FOR EXTENTION OF EXISTING	BK-GCS-PEDCO-120-ST-DW-0063
ARCHITECTURAL DETAIL DRAWING FOR EXTENTION OF EXISTING ELECT. BUILDING	BK-GCS-PEDCO-120-AR-DW-0002
STANDARD DRAWING FOR ANCHOR BOLTS	BK-GNRAL-PEDCO-000-ST-DW-0002
GENERAL NOTES-STEEL STRUCTURES	BK-GNRAL-PEDCO-000-ST-DW-0011
GENERAL NOTES-REINFORCED CONCRETE STRUCTURES	BK-GNRAL-PEDCO-000-ST-DW-0012
SPECIFICATION FOR ERECTION OF STEEL STRUCTURES	BK-GNRAL-PEDCO-000-ST-SP-0005
SPECIFICATION FOR FABRICATION OF STEEL STRUCTURES	BK-GNRAL-PEDCO-000-ST-SP-0003
SPECIFICATION FOR STEEL STRUCTURAL WORK	BK-GNRAL-PEDCO-000-ST-SP-0008
UNIT PLOT PLAN DRAWING	BK-GCS-PEDCO-120-PL-PY-0001
GEOTECHNICAL INVESTIGATION REPORT FOR COMPRESSOR STATION	BK-GCS-PEDCO-120-GT-RT-0001
SPECIFICATION FOR GROUTING	BK-GNRAL-PEDCO-000-ST-SP-0004
SPECIFICATION FOR PAINTING	BK-GNRAL-PEDCO-000-PI-SP-0006
STANDARD DRAWING FOR FIRE PROOFING	BK-GNRAL-PEDCO-000-ST-DW-0001

D02

KEY PLAN

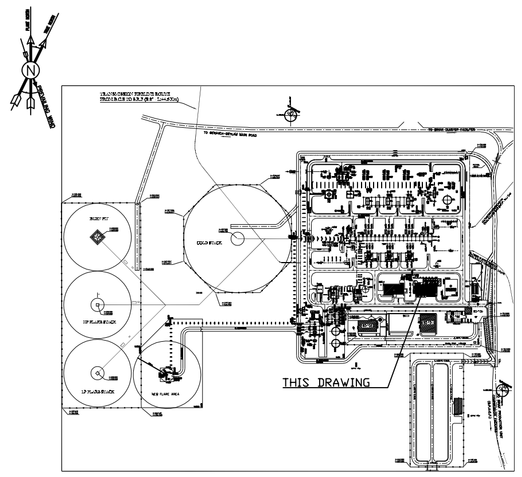

REV.	DATE	P.O.I.S	PREP.	CHK.	APP.	AUT.
D02	AUG.2024	AFC	R.BERLOUIE	M.PAKHARIAN	M.SADEGHIAN	**.**
D01	APR.2024	IFC	R.BERLOUIE	M.PAKHARIAN	S.FARAMARZPOUR	**.**
D00	AUG.2022	IFC	R.BERLOUIE	M.PAKHARIAN	M.MEHRSHAD	**.**

REV.	DESCRIPTION	CHECKED BY	CHECKED DATE	REV. APPR. BY	REV. APPR. DATE
***	**********	**.**	***.****	**.**	***.****

PROJECT NAME: *BINAK OILFIELD DEVELOPMENT/SURFACE FACILITIES GAS COMPRESSOR STATION*

PROJECT NO.: 971020

EPC CONTRACTOR: HIRGAN ENERGY – DESIGN & INSPECTION COMPANIES

EPD/EPC CONTRACTOR (GC): PETROIRAN DEVELOPMENT COMPANY (PEDCO)

DRAWING TITLE: *STRUCTURAL DRAWING FOR EXTENTION OF EXISTING ELECT. BUILDING*

SCALE	SIZE	DRAWING NO.	SHEET NO.	REV.
AS SHOWN	A1	BK-GCS-PEDCO-120-ST-DW-0064	1 OF 7	D02

اصل و کلیه نسخ این نقشه و حق اقتباس متعلق به شرکت ملی مناطق نفت خیز جنوب میباشد.

THE ORIGINAL AND ALL COPIES OF THIS DRAWING TOGETHER WITH THE COPYRIGHT THEREIN ARE THE SOLE PROPERTY OF N.I.S.O.C./ FIELDS

BINAK OILFIELD DEVELOPMENT
SURFACE FACILITIES
GAS COMPRESSOR STATION

DATE	SCALE	DRAWING BY	CHECKED BY	PROJECT ENG.

NO CONSTRUCTION PERMITTED UNLESS DRAWING APPROVED

APPROVED FOR CONSTRUCTION BY: DATE:

BUDGET REF.	LOCATION	SIZE	CLASS	SERIAL NO.	SHEET	REVISION
053-073-9184	F	4	M	709201	1	D02

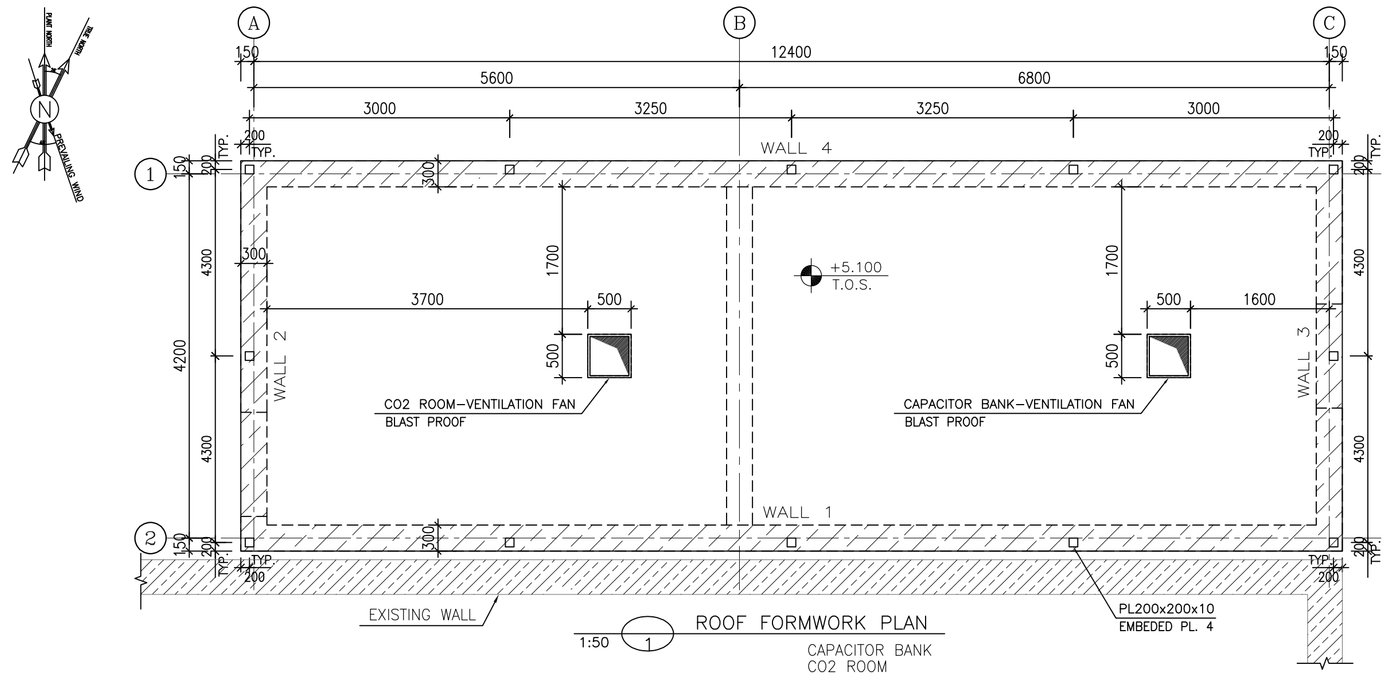

1:50 (1) ROOF FORMWORK PLAN
CAPACITOR BANK
CO2 ROOM

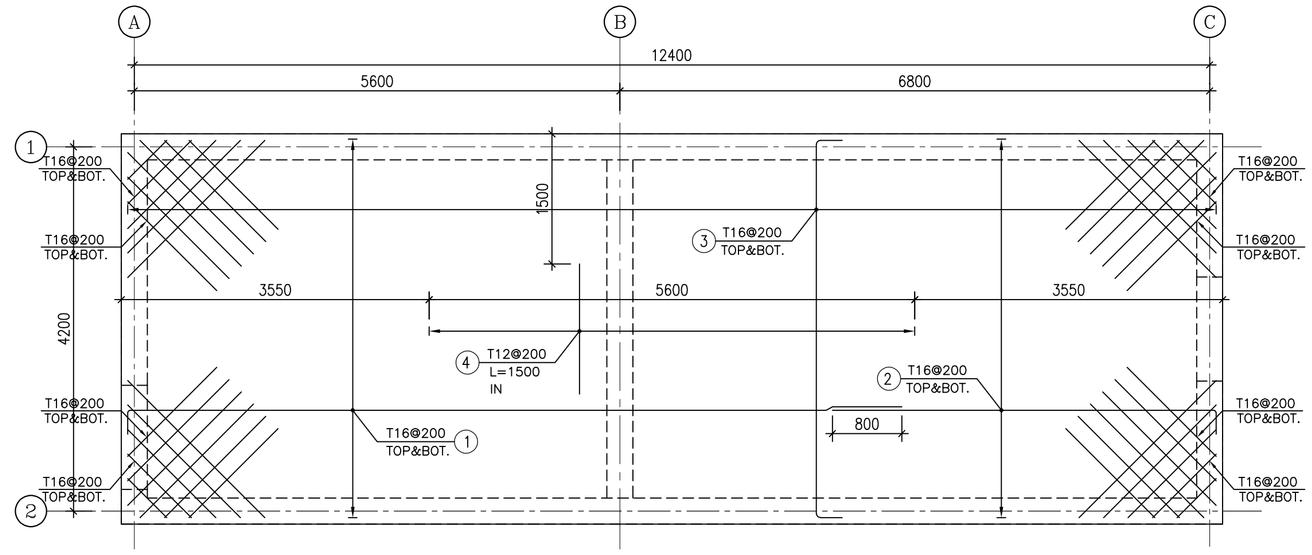

1:50 (2) ROOF REINFORCEMENT PLAN

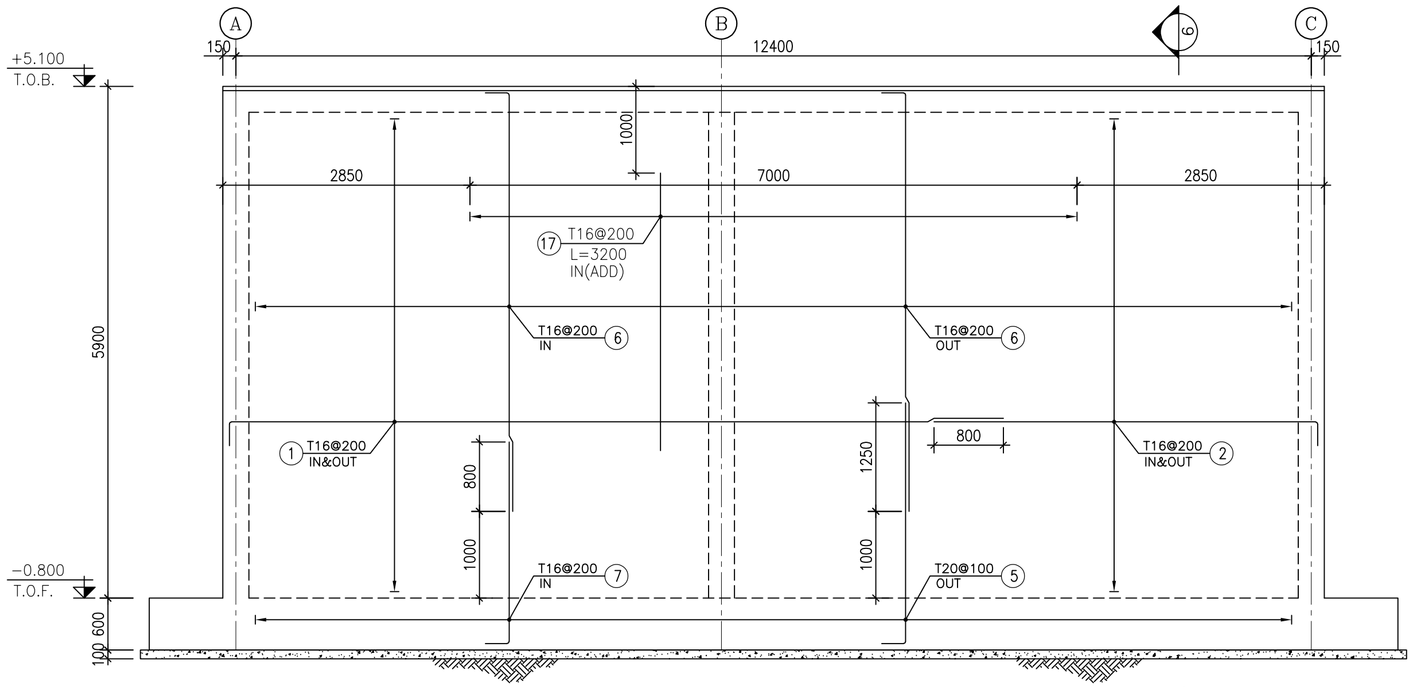

1:50 (3) WALL 1&4 REINFORCEMENT

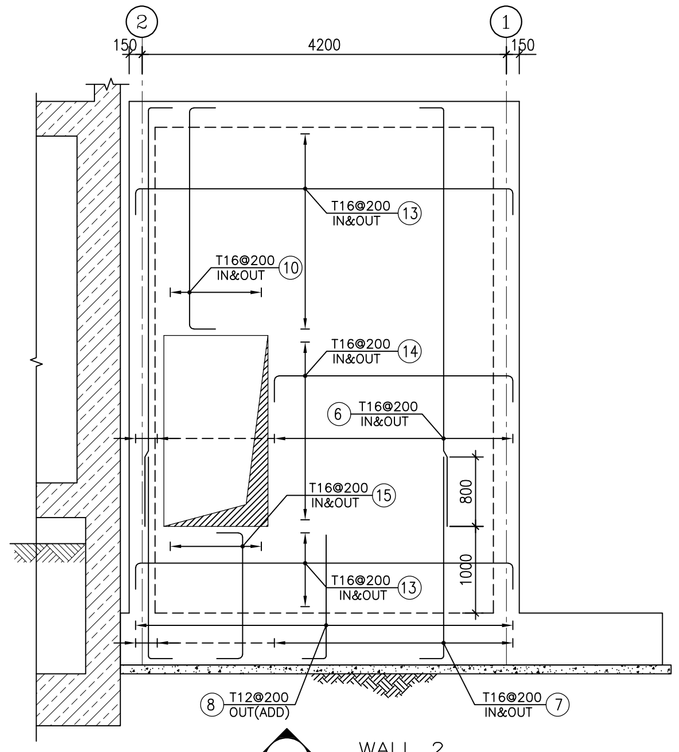

1:50 (4) WALL 2 REINFORCEMENT

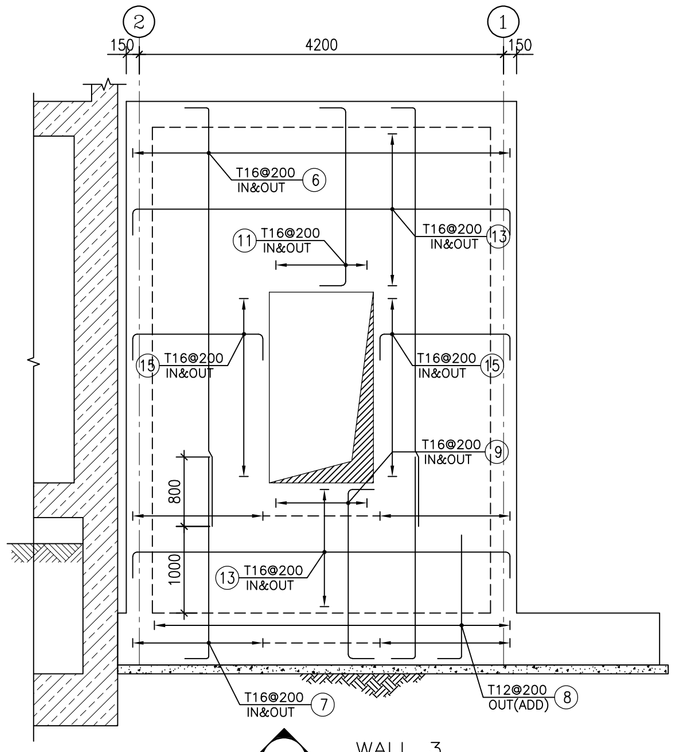

1:50 (5) WALL 3 REINFORCEMENT

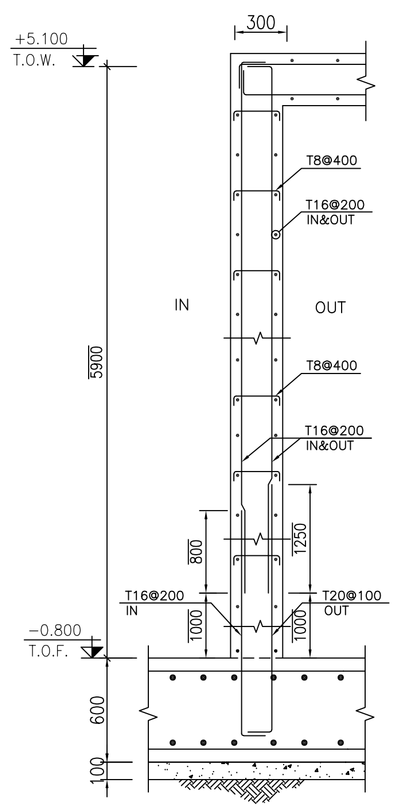

1:25 (6) REINFORCEMENT

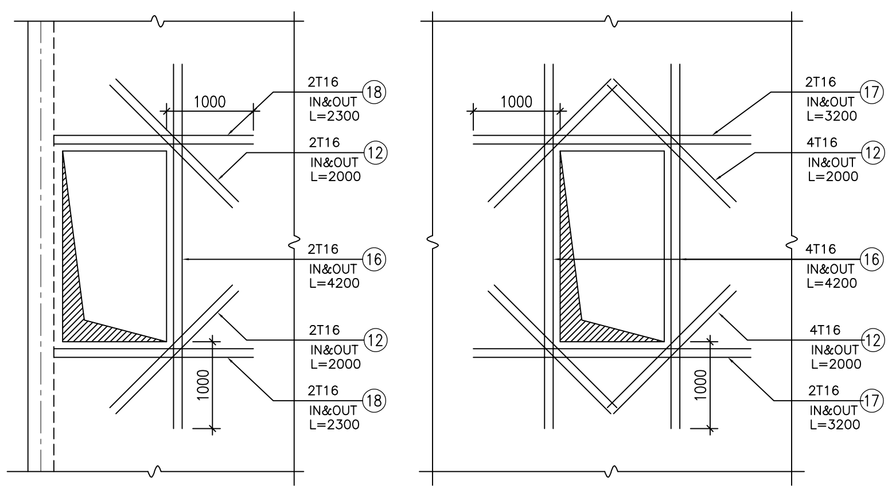

1:50 (7) REINFORCEMENT DETAIL FOR OPENING

BAR BENDING SCHEDULE

Pos	Spec.	Shape	L	No.	T12	T16	T20
1	T16	250 8750	9.00	106		954.0	
2	T16	250 4650	4.90	106		519.4	
3	T16	250 4400 250	4.90	128		627.2	
4	T12	1500	1.50	29	43.5		
5	T20	300 2800	3.10	256			793.6
6	T16	250 4850	6.10	324		1976.4	
7	T16	250 2350	2.60	220		572.0	
8	T12	200 1500	1.70	46	78.2		
9	T16	250 2000 250	2.50	14		35.0	
10	T16	250 2600 250	3.10	14		43.4	
11	T16	250 2100 250	2.60	14		36.4	
12	T16	2000	2.00	12		24.0	
13	T16	250 4300 250	4.80	76		364.8	
14	T16	250 2800 250	3.30	24		79.2	
15	T16	250 1500 250	2.00	62		124.0	
16	T16	4200	4.20	6		25.2	
17	T16	3200	3.20	40		128.0	
18	T16	2300	2.30	4		9.2	
TOTAL LENGTH (m)					121.7	5518.2	793.6
UNIT WEIGTH (Kg/m)					0.888	1.578	2.466
WEIGTH (Kg)					108.1	8707.8	1957.1
TOTAL WEIGTH (Kg)					10780 Kg.		

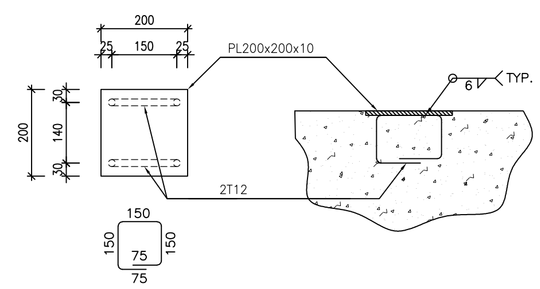

1:100 (8) EMBEDED PLATE 4

NOTES

1) ALL ELEVATIONS AND COORDINATES ARE IN "m" AND DIMENSIONS ARE IN "mm" UNLESS OTHERWISE NOTED.
2) ALL DIMENSIONS AND ELEVATIONS SHALL BE CHECKED BY THE CONTRACTOR PRIOR TO CONSTRUCTION.
3) STRUCTURAL STEEL SHAPE & PLATES SHALL CONFORM TO S235JR WITH MINIMUM YIELD STRESS OF Fy=2400 kg/cm².
4) ALL BOLTS ARE HIGH STRENGTH BOLTS GRADE 8.8 WITH MINIMUM TENSILE STRENGTH OF Fu=800 MPa.
5) ANCHOR BOLTS SHALL BE ASTM A307 GRADE C.
6) ALL WELDING SHALL BE IN ACCORDANCE WITH THE LATEST EDITION OF STRUCTURAL WELDING CODE, AWS D1.1/D1.1M.
7) TYPE OF WELDING ELECTRODE SHALL BE E70 AND IN ACCORDANCE WITH SPECIFICATION FOR STRUCTURAL STEEL FABRICATION AND ERECTION.
8) FLANGES SHOULD BE CONTINUOUSLY WELDED TO THE WEB.
9) WELDING SPLICE SHALL BE PROVIDED AT SHOP AND NOT PERMITTED AT FIELD.
10) COLUMN SPLICE ELEVATION SHALL BE LOCATED 1.2m OR MORE AWAY FROM THE BEAM-TO-COLUMN CONNECTIONS.
11) 28 DAYS CHARACTERISTIC COMPRESSIVE STRENGTH OF CONCRETE IS 30MPa. (ON CYLINDRICAL SPECIMEN)
12) 28 DAYS CHARACTERISTIC COMPRESSIVE STRENGTH OF LEAN CONCRETE IS 15MPa. (ON CYLINDRICAL SPECIMEN)
13) CONCRETE COVER OVER BARS SHALL BE 75mm FOR FOUNDATION AND 40mm FOR CAST IN-SITU OTHER PARTS.
14) CEMENT TYPE II SHALL BE USED ACCORDING TO GEOTECHNICAL REPORT SUGGESTION.
15) FILL MATERIAL SHALL BE COMPACTED TO NOT LESS THAN 95% OF THE MAXIMUM DENSITY AS DETERMINED BY ASTM D-1557 & ASTM D-1241 (MODIFIED PROCTOR) METHOD.
16) THE EMULSION SHOULD BE USED ON CONCRETE EXPOSED WITH SOIL. B-90-COAT.M.E IS A BITUMEN-BASED ONE-COMPONENT EMULSION PROTECTIVE COATING TO PREVENT THE PENETRATION OF DESTRUCTIVE SALTS & IONS.
THIS MATERIAL IS CONTROLLED ACCORDING TO THE FOLLOWING STANDARDS: ASTM D1227, ASTM D2939, ASTM D1640

±0.00 = +11.10(F.G.L)MSL

LEGEND

F.G.L. : FINISH GROUND LEVEL
T.O.B. : TOP OF BEAM
T.O.F. : TOP OF FOUNDATION
B.O.B.PL. : BOTTOM OF BASE PLATE
C.O.ST. : CENTER OF STRUT
T.O.CR. : TOP OF CRANE
T.O.BR. : TOP OF BROCKET
C.O.ST. : CENTER OF STRUT
N.T.S : NOT TO SCALED

REINFORCED CONCRETE
LEAN CONCRETE
GROUND
BRICK WALL

REFERENCE DRAWING	DRG. No.
CALCULATION REPORT FOR EXTENTION ELECT. BUILDING	BK-GCS-PEDCO-120-ST-CN-0005
FOUNDATION DRAWING FOR EXTENTION OF EXISTING	BK-GCS-PEDCO-120-ST-DW-0063
ARCHITECTURAL DETAIL DRAWING FOR EXTENTION OF EXISTING ELECT. BUILDING	BK-GCS-PEDCO-120-AR-DW-0002
STANDARD DRAWING FOR ANCHOR BOLTS	BK-GNRAL-PEDCO-000-ST-DW-0002
GENERAL NOTES-STEEL STRUCTURES	BK-GNRAL-PEDCO-000-ST-DW-0011
GENERAL NOTES-REINFORCED CONCRETE STRUCTURES	BK-GNRAL-PEDCO-000-ST-DW-0012
SPECIFICATION FOR ERECTION OF STEEL STRUCTURES	BK-GNRAL-PEDCO-000-ST-SP-0005
SPECIFICATION FOR FABRICATION OF STEEL STRUCTURES	BK-GNRAL-PEDCO-000-ST-SP-0003
SPECIFICATION FOR STEEL STRUCTURAL WORK	BK-GNRAL-PEDCO-000-ST-SP-0008
UNIT PLOT PLAN DRAWING	BK-GCS-PEDCO-120-PL-PY-0001
GEOTECHNICAL INVESTIGATION REPORT FOR COMPRESSOR STATION	BK-GCS-PEDCO-120-GT-RT-0001
SPECIFICATION FOR GROUTING	BK-GNRAL-PEDCO-000-ST-SP-0004
SPECIFICATION FOR PAINTING	BK-GNRAL-PEDCO-000-PI-SP-0006
STANDARD DRAWING FOR FIRE PROOFING	BK-GNRAL-PEDCO-000-ST-DW-0001

D02

KEY PLAN

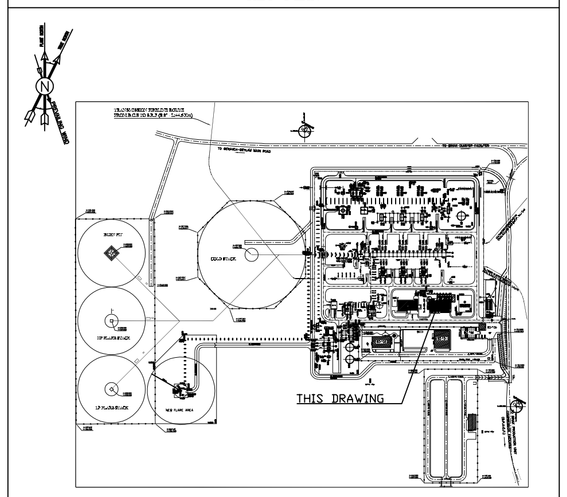

REV.	DATE	P.O.I.S	PREP.	CHK.	APP.	AUT.
D02	AUG.2024	AFC	R.BERLOUIE	M.FAKHARIAN	M.SADEGHIAN	**.**
D01	APR.2024	IFC	R.BERLOUIE	M.FAKHARIAN	S.FARAMARZPOUR	**.**
D00	AUG.2022	IFC	R.BERLOUIE	M.FAKHARIAN	M.MEHRSHAD	**.**

REV.	DESCRIPTION	CHECKED BY	DATE	REV. APPR. BY	DATE
***	**********	**.**	***.****	**.**	***.****

PROJECT NAME: BINAK OILFIELD DEVELOPMENT/SURFACE FACILITIES GAS COMPRESSOR STATION

PROJECT NO.: 971020

اصل و کلیه نسخ این نقشه و حق اقتباس متعلق به شرکت ملی مناطق نفت خیز جنوب میباشد.
THE ORIGINAL AND ALL COPIES OF THIS DRAWING TOGETHER WITH THE COPYRIGHT THEREIN ARE THE SOLE PROPERTY OF N.I.S.O.C./ FIELDS

EPC CONTRACTOR: HIRGAN ENERGY – DESIGN & INSPECTION COMPANIES

EPD/EPC CONTRACTOR (GC): PEDCO — PETROIRAN DEVELOPMENT COMPANY

BINAK OILFIELD DEVELOPMENT
SURFACE FACILITIES
GAS COMPRESSOR STATION

DATE	SCALE	DRAWING BY	CHECKED BY	PROJECT ENG.

NO CONSTRUCTION PERMITTED UNLESS DRAWING APPROVED

APPROVED FOR CONSTRUCTION BY: DATE:

DRAWING TITLE: STRUCTURAL DRAWING FOR EXTENTION OF EXISTING ELECT. BUILDING

SCALE	SIZE	DRAWING NO.	SHEET NO.	REV.	BUDGET REF.	LOCATION	SIZE	CLASS	SERIAL NO.	SHEET	REVISION
AS SHOWN	A1	BK-GCS-PEDCO-120-ST-DW-0064	2 OF 7	D02	053-073-9184	F	4	M	709201	2	D02

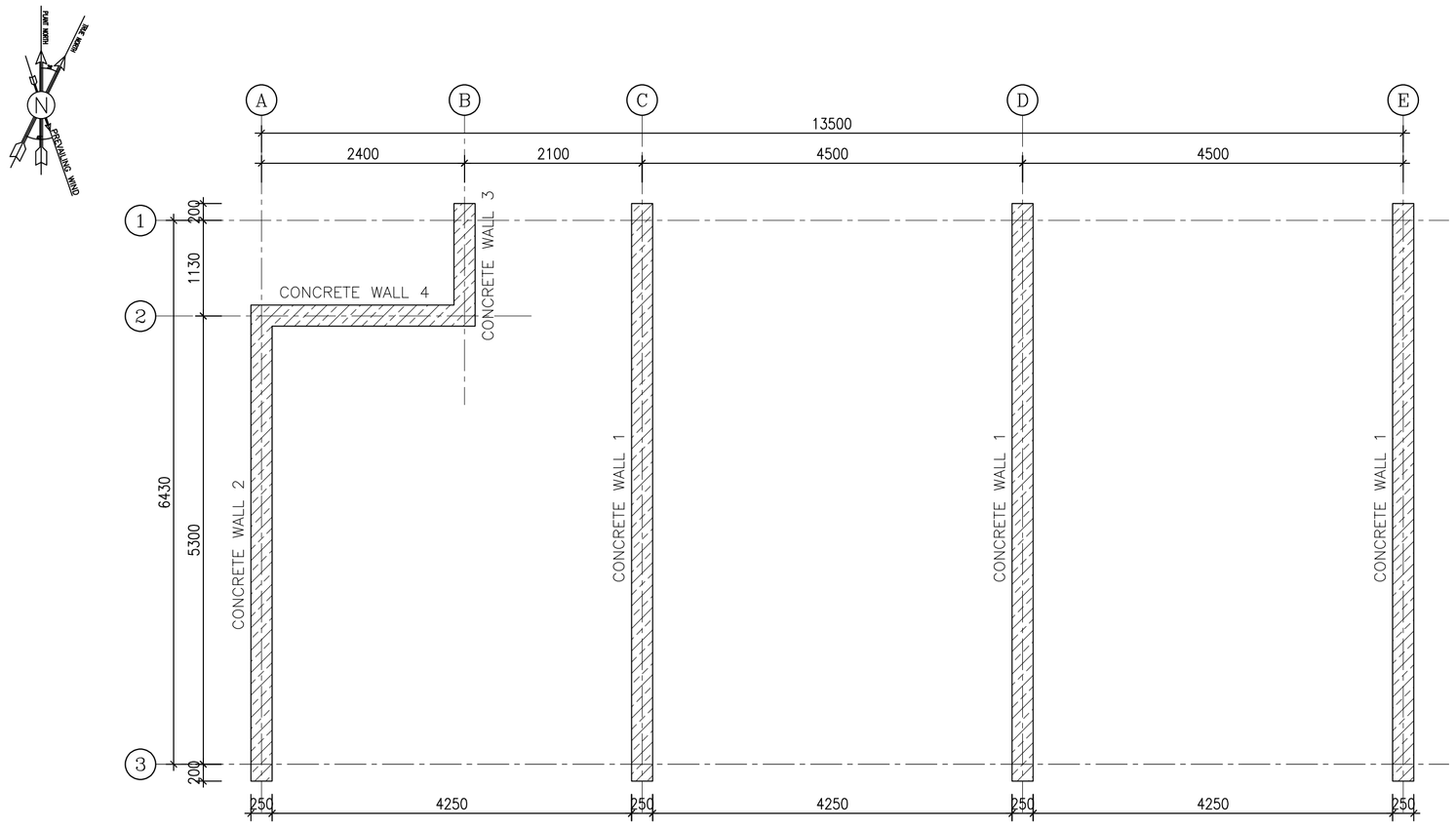

1:50 (1) CONCRETE WALL LAYOUT PLAN

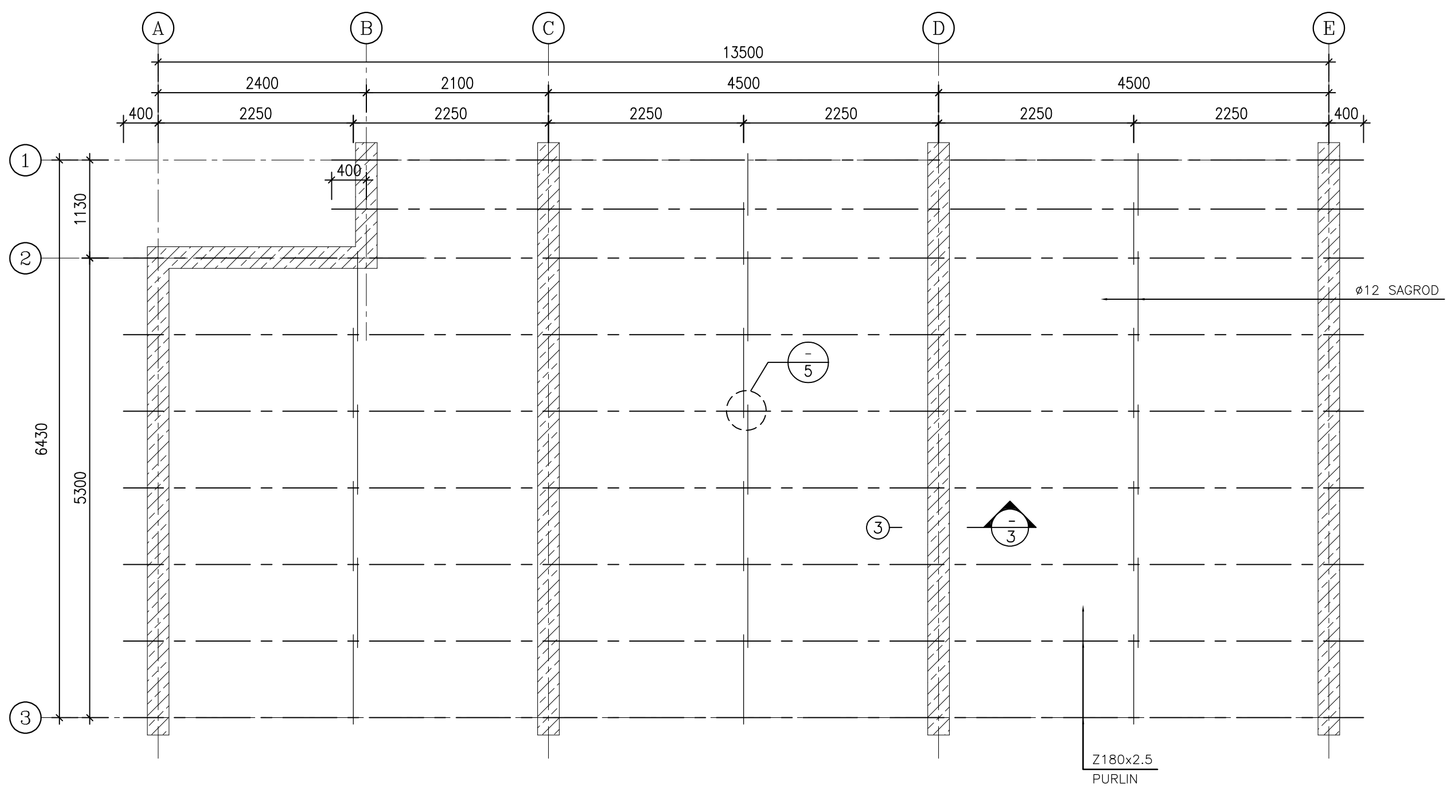

1:50 (2) ROOF PURLIN PLAN

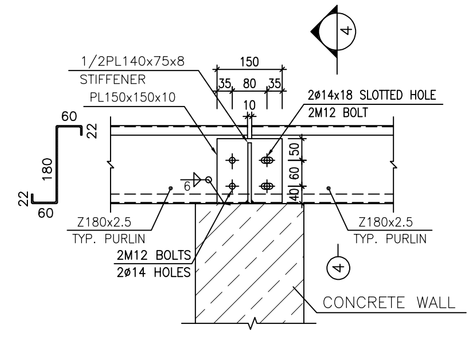

1:10 (3)

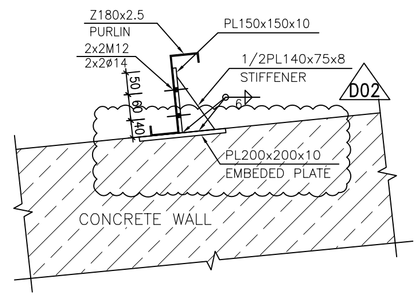

1:10 (4)

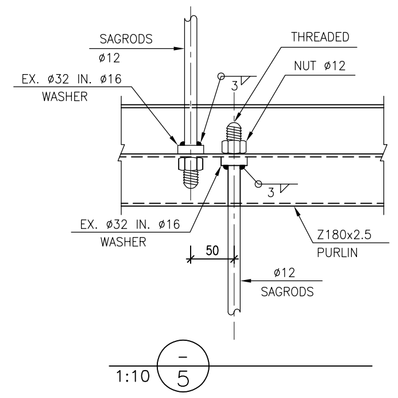

1:10 (5)

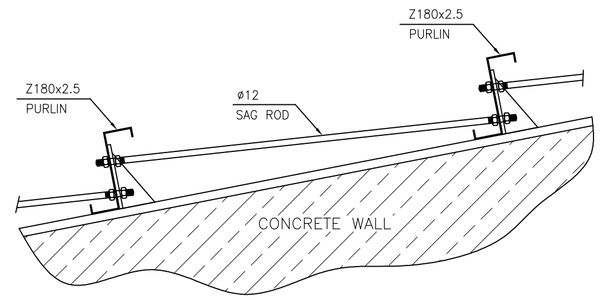

1:10 (6) TYPICAL SAGROD DETAIL

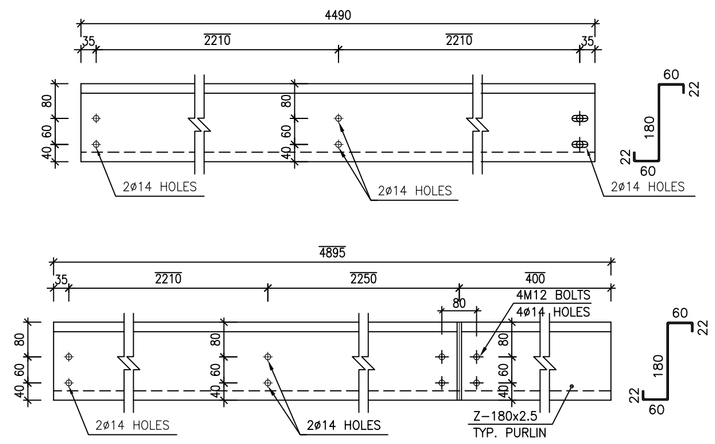

1:10 (7) TYPICAL ROOF PURLIN

NOTES

1) ALL ELEVATIONS AND COORDINATES ARE IN "m" AND DIMENSIONS ARE IN "mm" UNLESS OTHERWISE NOTED.
2) ALL DIMENSIONS AND ELEVATIONS SHALL BE CHECKED BY THE CONTRACTOR PRIOR TO CONSTRUCTION.
3) STRUCTURAL STEEL SHAPE & PLATES SHALL CONFORM TO S235JR WITH MINIMUM YIELD STRESS OF Fy=2400 kg/cm².
4) ALL BOLTS ARE HIGH STRENGTH BOLTS GRADE 8.8 WITH MINIMUM TENSILE STRENGTH OF Fu=800 MPa.
5) ANCHOR BOLTS SHALL BE ASTM A307 GRADE C.
6) ALL WELDING SHALL BE IN ACCORDANCE WITH THE LATEST EDITION OF STRUCTURAL WELDING CODE, AWS D1.1/D1.1M.
7) TYPE OF WELDING ELECTRODE SHALL BE E70 AND IN ACCORDANCE WITH SPECIFICATION FOR STRUCTURAL STEEL FABRICATION AND ERECTION.
8) FLANGES SHOULD BE CONTINUOUSLY WELDED TO THE WEB.
9) WELDING SPLICE SHALL BE PROVIDED AT SHOP AND NOT PERMITTED AT FIELD.
10) COLUMN SPLICE ELEVATION SHALL BE LOCATED 1.2m OR MORE AWAY FROM THE BEAM-TO-COLUMN CONNECTIONS.
11) 28 DAYS CHARACTERISTIC COMPRESSIVE STRENGTH OF CONCRETE IS 30MPa. (ON CYLINDRICAL SPECIMEN)
12) 28 DAYS CHARACTERISTIC COMPRESSIVE STRENGTH OF LEAN CONCRETE IS 15MPa. (ON CYLINDRICAL SPECIMEN)
13) CONCRETE COVER OVER BARS SHALL BE 75mm FOR FOUNDATION AND 40mm FOR CAST IN-SITU OTHER PARTS.
14) CEMENT TYPE II SHALL BE USED ACCORDING TO GEOTECHNICAL REPORT SUGGESTION.
15) FILL MATERIAL SHALL BE COMPACTED TO NOT LESS THAN 95% OF THE MAXIMUM DENSITY AS DETERMINED BY ASTM D-1557 & ASTM D-1241 (MODIFIED PROCTOR) METHOD.
16) THE EMULSION SHOULD BE USED ON CONCRETE EXPOSED WITH SOIL. B-90-COAT.M.E IS A BITUMEN-BASED ONE-COMPONENT EMULSION PROTECTIVE COATING TO PREVENT THE PENETRATION OF DESTRUCTIVE SALTS & IONS.
THIS MATERIAL IS CONTROLLED ACCORDING TO THE FOLLOWING STANDARDS: ASTM D1227, ASTM D2939, ASTM D1640

±0.00 = +11.10(F.G.L)MSL

LEGEND

F.G.L. : FINISH GROUND LEVEL
T.O.B. : TOP OF BEAM
T.O.F. : TOP OF FOUNDATION
B.O.B.PL. : BOTTOM OF BASE PLATE
C.O.ST. : CENTER OF STRUT
T.O.CR. : TOP OF CRANE
T.O.BR. : TOP OF BROCKET
C.O.ST. : CENTER OF STRUT
N.T.S : NOT TO SCALED

REINFORCED CONCRETE
LEAN CONCRETE
GROUND
BRICK WALL

REFERENCE DRAWING	DRG. No.
CALCULATION REPORT FOR EXTENTION ELECT. BUILDING	BK-GCS-PEDCO-120-ST-CN-0005
FOUNDATION DRAWING FOR EXTENTION OF EXISTING	BK-GCS-PEDCO-120-ST-DW-0063
ARCHITECTURAL DETAIL DRAWING FOR EXTENTION OF EXISTING ELECT. BUILDING	BK-GCS-PEDCO-120-AR-DW-0002
STANDARD DRAWING FOR ANCHOR BOLTS	BK-GNRAL-PEDCO-000-ST-DW-0002
GENERAL NOTES-STEEL STRUCTURES	BK-GNRAL-PEDCO-000-ST-DW-0011
GENERAL NOTES-REINFORCED CONCRETE STRUCTURES	BK-GNRAL-PEDCO-000-ST-DW-0012
SPECIFICATION FOR ERECTION OF STEEL STRUCTURES	BK-GNRAL-PEDCO-000-ST-SP-0005
SPECIFICATION FOR FABRICATION OF STEEL STRUCTURES	BK-GNRAL-PEDCO-000-ST-SP-0003
SPECIFICATION FOR STEEL STRUCTURAL WORK	BK-GNRAL-PEDCO-000-ST-SP-0008
UNIT PLOT PLAN DRAWING	BK-GCS-PEDCO-120-PL-PY-0001
GEOTECHNICAL INVESTIGATION REPORT FOR COMPRESSOR STATION	BK-GCS-PEDCO-120-GT-RT-0001
SPECIFICATION FOR GROUTING	BK-GNRAL-PEDCO-000-ST-SP-0004
SPECIFICATION FOR PAINTING	BK-GNRAL-PEDCO-000-PI-SP-0006
D02 STANDARD DRAWING FOR FIRE PROOFING	BK-GNRAL-PEDCO-000-ST-DW-0001

KEY PLAN

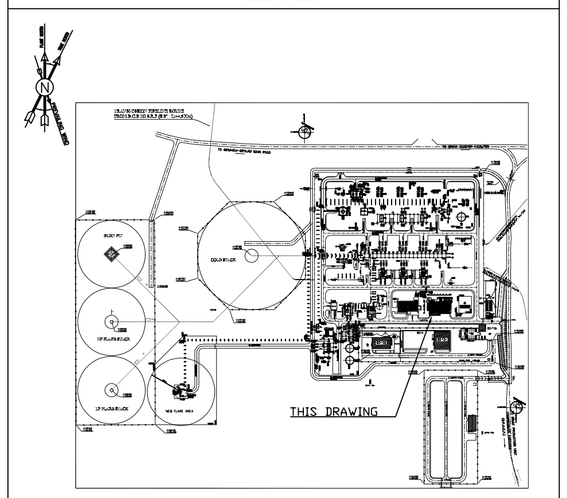

REV.	DATE	P.O.I.S	PREP.	CHK.	APP.	AUT.
D02	AUG.2024	AFC	R.BERLOUIE	M.FAKHARIAN	M.SADEGHIAN	**.**
D01	APR.2024	IFC	R.BERLOUIE	M.FAKHARIAN	S.FARAMARZPOUR	**.**
D00	AUG.2022	IFC	R.BERLOUIE	M.FAKHARIAN	M.MEHRSHAD	**.**

REV.	DESCRIPTION	CHECKED BY	CHECKED DATE	REV. APPR. BY	REV. APPR. DATE
***	**********	**.**	***.****	**.**	***.****

PROJECT NAME: *BINAK OILFIELD DEVELOPMENT/SURFACE FACILITIES GAS COMPRESSOR STATION*

PROJECT NO.: 971020

EPC CONTRACTOR: HIRGAN ENERGY – DESIGN & INSPECTION COMPANIES

EPD/EPC CONTRACTOR (GC): PETROIRAN DEVELOPMENT COMPANY (PEDCO)

DRAWING TITLE: *STRUCTURAL DRAWING FOR EXTENTION OF EXISTING ELECT. BUILDING*

اصل و کلیه نسخ این نقشه و حق اقتباس متعلق به شرکت ملی مناطق نفت خیز جنوب میباشد.

THE ORIGINAL AND ALL COPIES OF THIS DRAWING TOGETHER WITH THE COPYRIGHT THEREIN ARE THE SOLE PROPERTY OF N.I.S.O.C./ FIELDS

BINAK OILFIELD DEVELOPMENT SURFACE FACILITIES GAS COMPRESSOR STATION

DATE	SCALE	DRAWING BY	CHECKED BY	PROJECT ENG.

NO CONSTRUCTION PERMITTED UNLESS DRAWING APPROVED

APPROVED FOR CONSTRUCTION BY: DATE:

SCALE	SIZE	DRAWING NO.	SHEET NO.	REV.
AS SHOWN	A1	BK-GCS-PEDCO-120-ST-DW-0064	3 OF 7	D02

BUDGET REF.	LOCATION	SIZE	CLASS	SERIAL NO.	SHEET	REVISION
053-073-9184	F	4	M	709201	3	D02

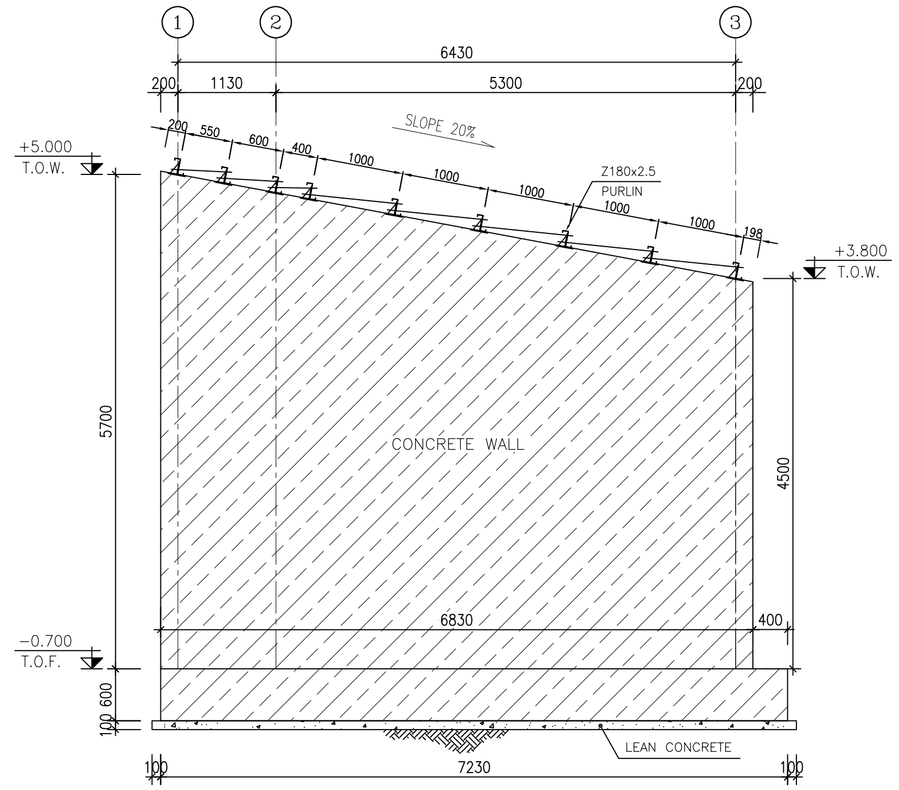

1:50 (1) CONCRETE WALL 1 FORMWORK

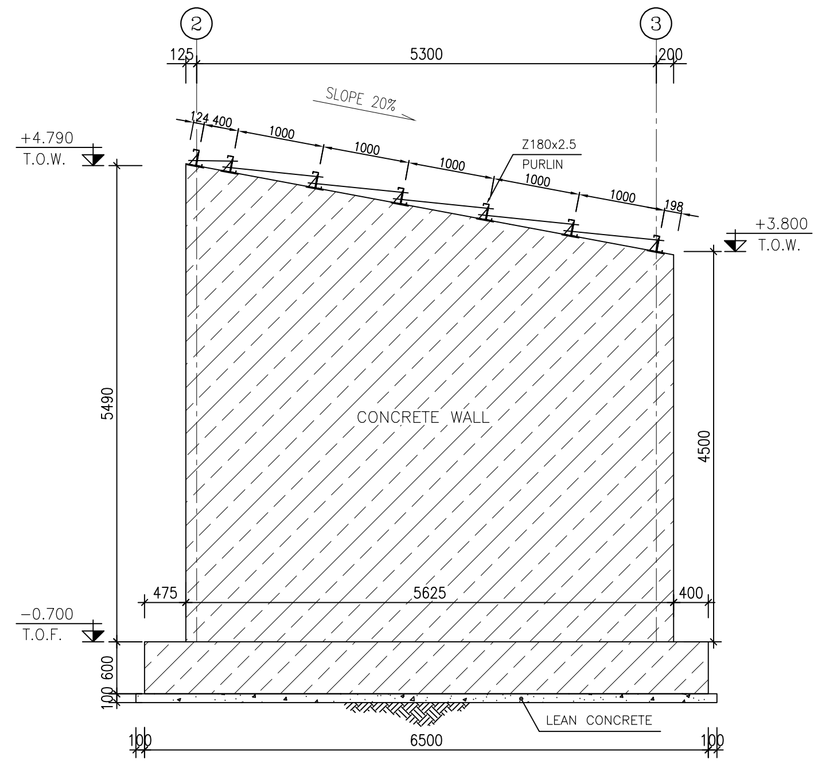

1:50 (2) CONCRETE WALL 2 FORMWORK

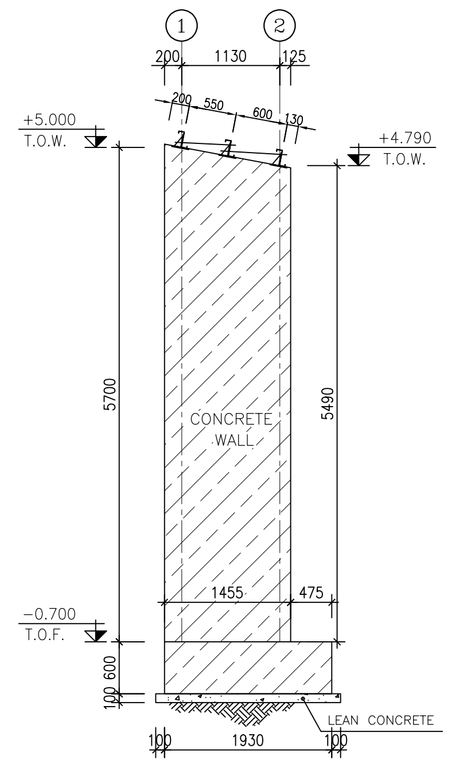

1:50 (3) CONCRETE WALL 3 FORMWORK

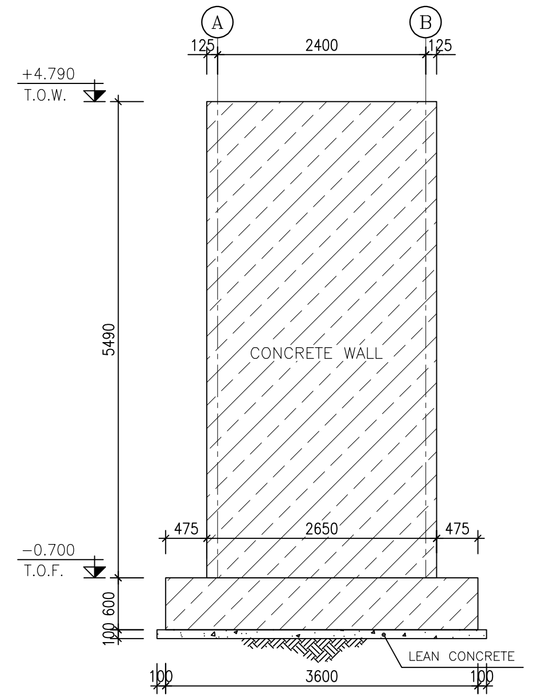

1:50 (4) CONCRETE WALL 4 FORMWORK

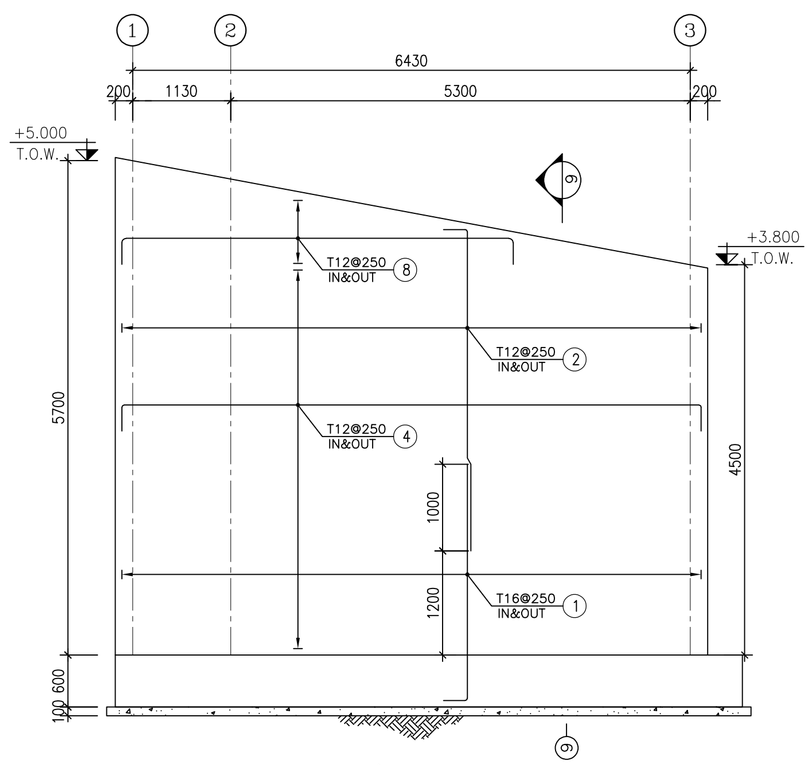

1:50 (5) CONCRETE WALL 1 REINFORCEMENT

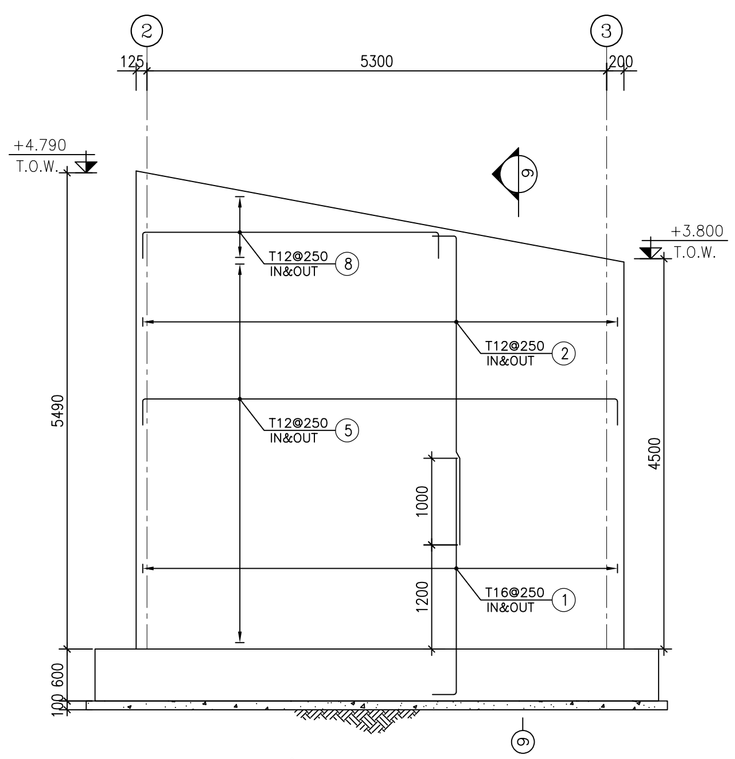

1:50 (6) CONCRETE WALL 2 REINFORCEMENT

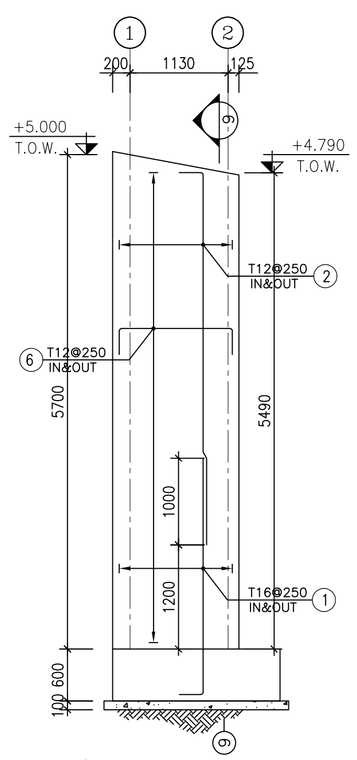

1:50 (7) CONCRETE WALL 3 REINFORCEMENT

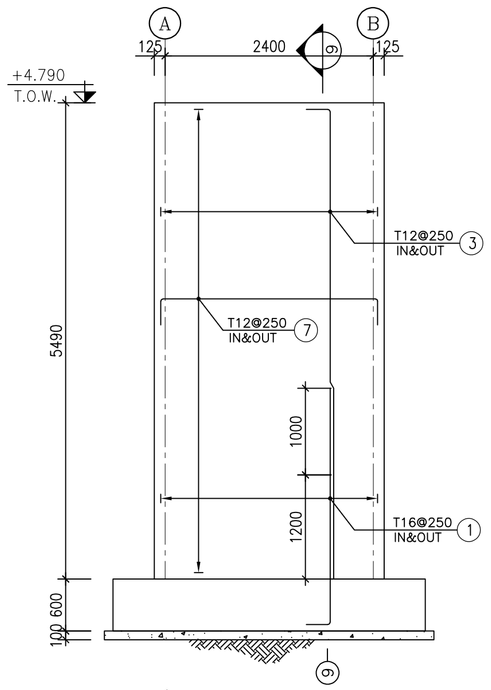

1:50 (8) CONCRETE WALL 4 REINFORCEMENT

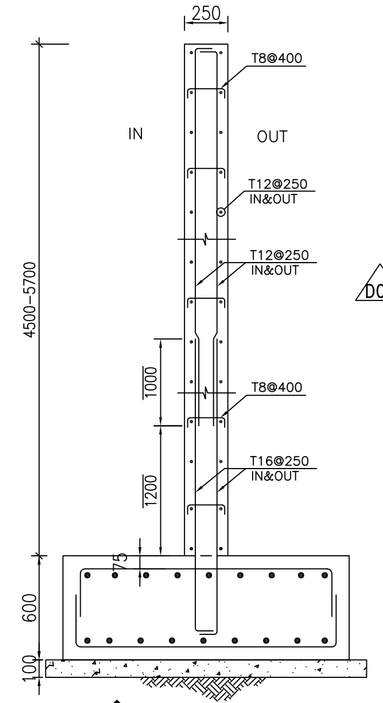

1:25 (9) REINFORCEMENT

D02

BAR BENDING SCHEDULE						
Pos	Spec.	Shape	L	No.	T12	T16
1	T16	250 / 2750	3.00	236		708.0
2	T12	200 / 3300–4500	Var	214	877.4	
3	T12	200 / 4200	4.40	22	96.8	
4	T12	200 / 6700 / 200	7.10	108	766.8	
5	T12	200 / 5500 / 200	5.90	38	224.2	
6	T12	200 / 1350 / 200	1.75	48	84.0	
7	T12	200 / 2550 / 200	2.95	50	147.5	
8	T12	200 / 6400–2400 / 200	Var	16	76.8	
TOTAL LENGTH (m)					2273.5	708.0
UNIT WEIGTH (Kg/m)					0.888	1.578
WEIGTH (Kg)					2018.9	1117.3
TOTAL WEIGTH (Kg)					3140 Kg.	

NOTES

1) ALL ELEVATIONS AND COORDINATES ARE IN "m" AND DIMENSIONS ARE IN "mm" UNLESS OTHERWISE NOTED.
2) ALL DIMENSIONS AND ELEVATIONS SHALL BE CHECKED BY THE CONTRACTOR PRIOR TO CONSTRUCTION.
3) STRUCTURAL STEEL SHAPE & PLATES SHALL CONFORM TO S235JR WITH MINIMUM YIELD STRESS OF Fy=2400 kg/cm².
4) ALL BOLTS ARE HIGH STRENGTH BOLTS GRADE 8.8 WITH MINIMUM TENSILE STRENGTH OF Fu=800 MPa.
5) ANCHOR BOLTS SHALL BE ASTM A307 GRADE C.
6) ALL WELDING SHALL BE IN ACCORDANCE WITH THE LATEST EDITION OF STRUCTURAL WELDING CODE, AWS D1.1/D1.1M.
7) TYPE OF WELDING ELECTRODE SHALL BE E70 AND IN ACCORDANCE WITH SPECIFICATION FOR STRUCTURAL STEEL FABRICATION AND ERECTION.
8) FLANGES SHOULD BE CONTINUOUSLY WELDED TO THE WEB.
9) WELDING SPLICE SHALL BE PROVIDED AT SHOP AND NOT PERMITTED AT FIELD.
10) COLUMN SPLICE ELEVATION SHALL BE LOCATED 1.2m OR MORE AWAY FROM THE BEAM-TO-COLUMN CONNECTIONS.
11) 28 DAYS CHARACTERISTIC COMPRESSIVE STRENGTH OF CONCRETE IS 30MPa. (ON CYLINDRICAL SPECIMEN)
12) 28 DAYS CHARACTERISTIC COMPRESSIVE STRENGTH OF LEAN CONCRETE IS 15MPa. (ON CYLINDRICAL SPECIMEN)
13) CONCRETE COVER OVER BARS SHALL BE 75mm FOR FOUNDATION AND 40mm FOR CAST IN-SITU OTHER PARTS.
14) CEMENT TYPE II SHALL BE USED ACCORDING TO GEOTECHNICAL REPORT SUGGESTION.
15) FILL MATERIAL SHALL BE COMPACTED TO NOT LESS THAN 95% OF THE MAXIMUM DENSITY AS DETERMINED BY ASTM D-1557 & ASTM D-1241 (MODIFIED PROCTOR) METHOD.
16) THE EMULSION SHOULD BE USED ON CONCRETE EXPOSED WITH SOIL. B-90-COAT.M.E IS A BITUMEN-BASED ONE-COMPONENT EMULSION PROTECTIVE COATING TO PREVENT THE PENETRATION OF DESTRUCTIVE SALTS & IONS.
THIS MATERIAL IS CONTROLLED ACCORDING TO THE FOLLOWING STANDARDS: ASTM D1227, ASTM D2939, ASTM D1640

±0.00 = +11.10(F.G.L)MSL

LEGEND

F.G.L. : FINISH GROUND LEVEL
T.O.B. : TOP OF BEAM
T.O.F. : TOP OF FOUNDATION
B.O.B.P.L. : BOTTOM OF BASE PLATE
C.O.ST. : CENTER OF STRUT
T.O.CR. : TOP OF CRANE
T.O.BR. : TOP OF BROCKET
C.O.ST. : CENTER OF STRUT
N.T.S : NOT TO SCALED

REINFORCED CONCRETE
LEAN CONCRETE
GROUND
BRICK WALL

REFERENCE DRAWING	DRG. No.
CALCULATION REPORT FOR EXTENTION ELECT. BUILDING	BK-GCS-PEDCO-120-ST-CN-0005
FOUNDATION DRAWING FOR EXTENTION OF EXISTING	BK-GCS-PEDCO-120-ST-DW-0063
ARCHITECTURAL DETAIL DRAWING FOR EXTENTION OF EXISTING ELECT. BUILDING	BK-GCS-PEDCO-120-AR-DW-0002
STANDARD DRAWING FOR ANCHOR BOLTS	BK-GNRAL-PEDCO-000-ST-DW-0002
GENERAL NOTES-STEEL STRUCTURES	BK-GNRAL-PEDCO-000-ST-DW-0011
GENERAL NOTES-REINFORCED CONCRETE STRUCTURES	BK-GNRAL-PEDCO-000-ST-DW-0012
SPECIFICATION FOR ERECTION OF STEEL STRUCTURES	BK-GNRAL-PEDCO-000-ST-SP-0005
SPECIFICATION FOR FABRICATION OF STEEL STRUCTURES	BK-GNRAL-PEDCO-000-ST-SP-0003
SPECIFICATION FOR STEEL STRUCTURAL WORK	BK-GNRAL-PEDCO-000-ST-SP-0008
UNIT PLOT PLAN DRAWING	BK-GCS-PEDCO-120-PL-PY-0001
GEOTECHNICAL INVESTIGATION REPORT FOR COMPRESSOR STATION	BK-GCS-PEDCO-120-GT-RT-0001
SPECIFICATION FOR GROUTING	BK-GNRAL-PEDCO-000-ST-SP-0004
SPECIFICATION FOR PAINTING	BK-GNRAL-PEDCO-000-PL-SP-0006
STANDARD DRAWING FOR FIRE PROOFING	BK-GNRAL-PEDCO-000-ST-DW-0001

D02

KEY PLAN

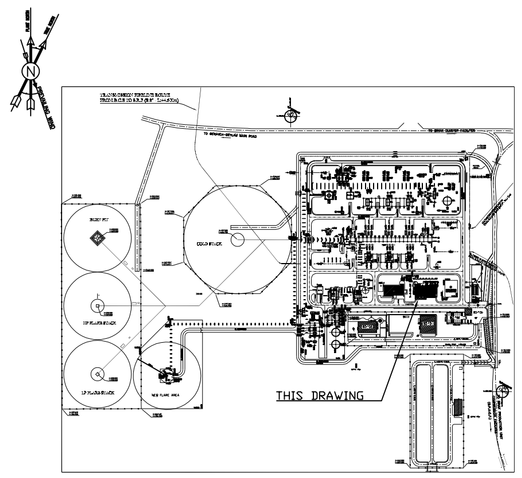

REV.	DATE	P.O.I.S	PREP.	CHK.	APP.	AUT.
D02	AUG.2024	AFC	R.BERLOUIE	M.FAKHARIAN	M.SADEGHIAN	**.**
D01	APR.2024	IFC	R.BERLOUIE	M.FAKHARIAN	S.FARAMARZPOUR	**.**
D00	AUG.2022	IFC	R.BERLOUIE	M.FAKHARIAN	M.MEHRSHAD	**.**

REV.	DESCRIPTION	BY	DATE	BY	DATE
		CHECKED		REV. APPR.	
***	**********	**.**	***.****	**.**	***.****

PROJECT NAME: *BINAK OILFIELD DEVELOPMENT/SURFACE FACILITIES GAS COMPRESSOR STATION*

PROJECT NO.: 971020

EPC CONTRACTOR: HIRGAN ENERGY – DESIGN & INSPECTION COMPANIES

EPD/EPC CONTRACTOR (GC): PETROIRAN DEVELOPMENT COMPANY

DRAWING TITLE: *STRUCTURAL DRAWING FOR EXTENTION OF EXISTING ELECT. BUILDING*

SCALE	SIZE	DRAWING NO.	SHEET NO.	REV.
AS SHOWN	A1	BK-GCS-PEDCO-120-ST-DW-0064	4 OF 7	D02

اصل و کلیه نسخ این نقشه و حق اقتباس متعلق به شرکت ملی مناطق نفت خیز جنوب میباشد.

THE ORIGINAL AND ALL COPIES OF THIS DRAWING TOGETHER WITH THE COPYRIGHT THEREIN ARE THE SOLE PROPERTY OF N.I.S.O.C./ FIELDS

BINAK OILFIELD DEVELOPMENT SURFACE FACILITIES GAS COMPRESSOR STATION

DATE	SCALE	DRAWING BY	CHECKED BY	PROJECT ENG.

NO CONSTRUCTION PERMITTED UNLESS DRAWING APPROVED

APPROVED FOR CONSTRUCTION BY: DATE:

BUDGET REF.	LOCATION	SIZE	CLASS	SERIAL NO.	SHEET	REVISION
053-073-9184	F	4	M	709201	4	D02

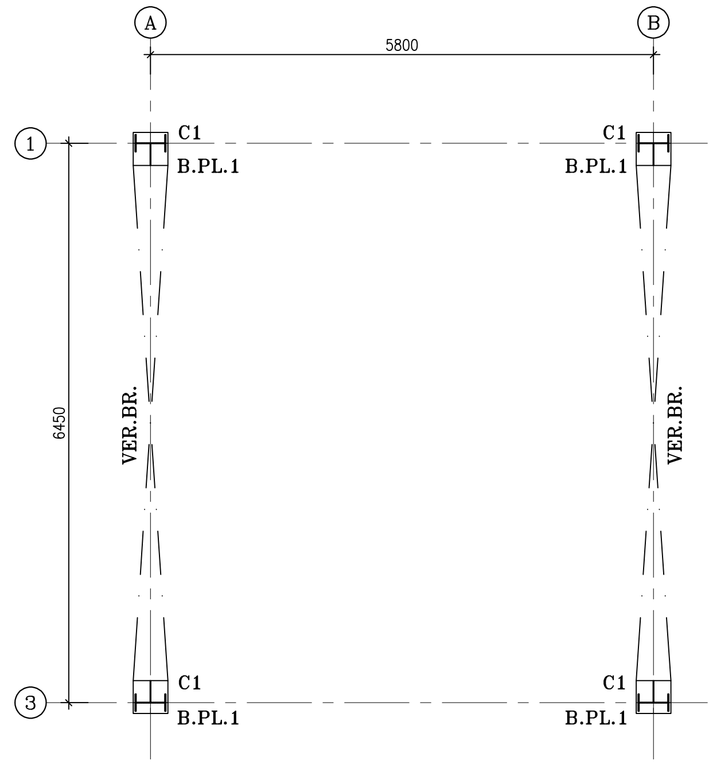

1:50 (1) COLUMN & BASE PLATE LAYOUT PLAN

D02 DIESEL ROOM

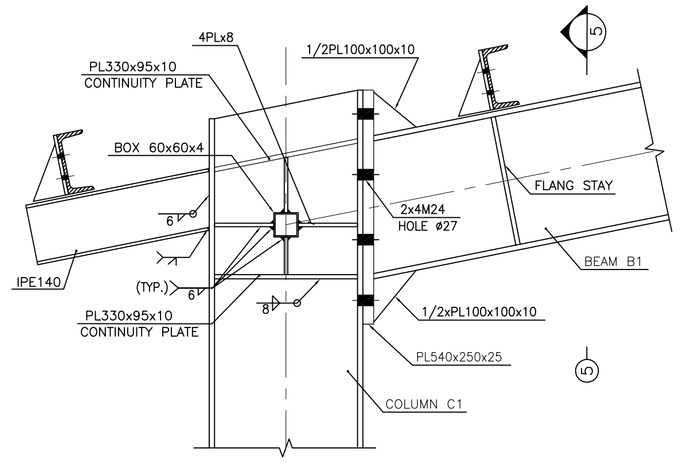

1:10 (4)

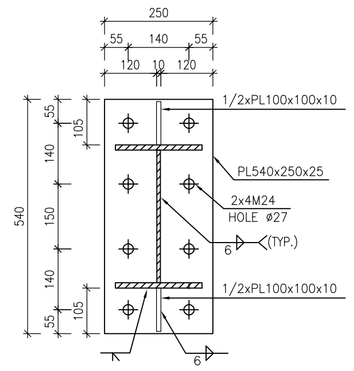

1:10 (5)

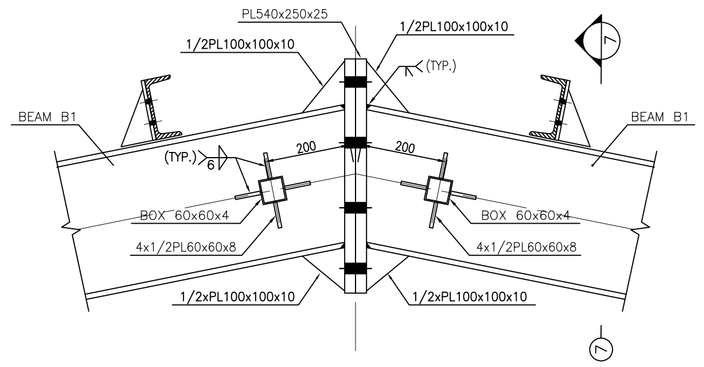

1:10 (6)

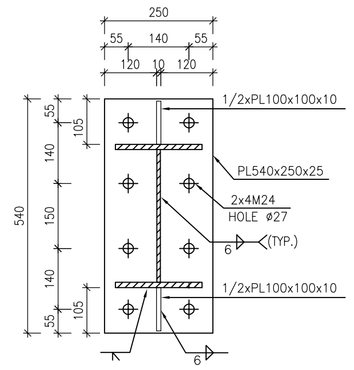

1:10 (7)

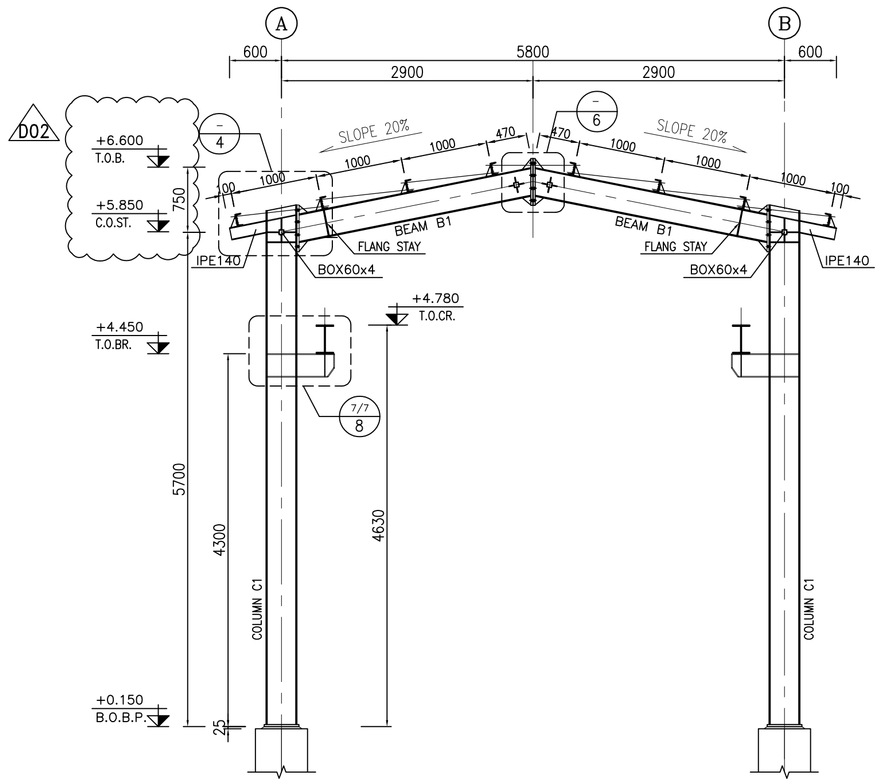

1:50 (2) FRAMING ELEVATION ON AXES 1&3

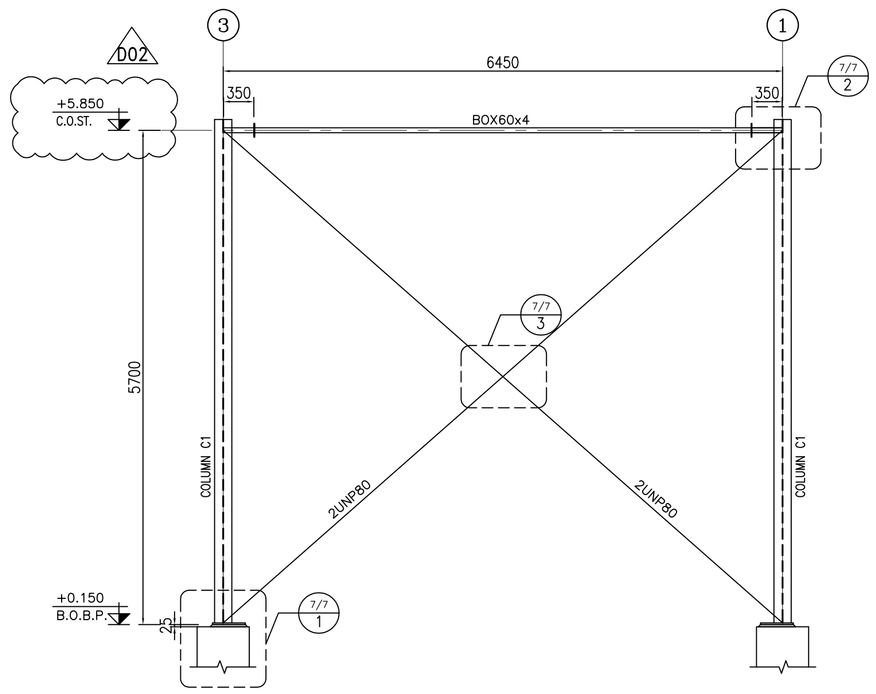

1:50 (3) FRAMING ELEVATION ON AXES A&B

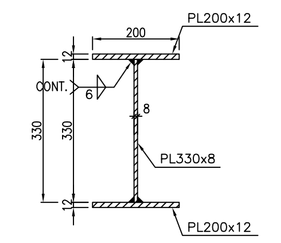

1:10 (8) COLUMN C1

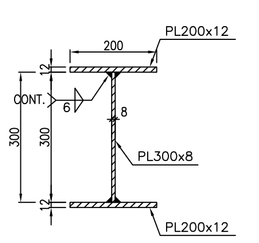

1:10 (9) BEAM B1

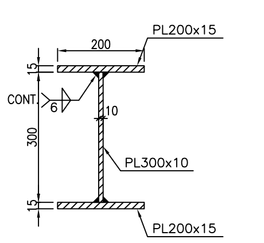

1:10 (10) CRANE RUNWAY BEAM

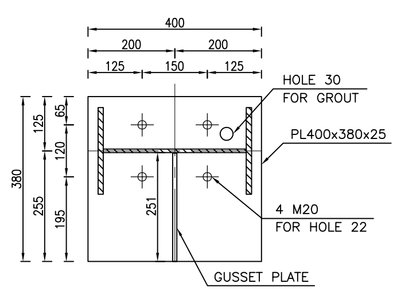

1:10 (11) BASE PLATE 1 N=4

NOTES

1) ALL ELEVATIONS AND COORDINATES ARE IN "m" AND DIMENSIONS ARE IN "mm" UNLESS OTHERWISE NOTED.
2) ALL DIMENSIONS AND ELEVATIONS SHALL BE CHECKED BY THE CONTRACTOR PRIOR TO CONSTRUCTION.
3) STRUCTURAL STEEL SHAPE & PLATES SHALL CONFORM TO S235JR WITH MINIMUM YIELD STRESS OF Fy=2400 kg/cm².
4) ALL BOLTS ARE HIGH STRENGTH BOLTS GRADE 8.8 WITH MINIMUM TENSILE STRENGTH OF Fu=800 MPa.
5) ANCHOR BOLTS SHALL BE ASTM A307 GRADE C.
6) ALL WELDING SHALL BE IN ACCORDANCE WITH THE LATEST EDITION OF STRUCTURAL WELDING CODE, AWS D1.1/D1.1M.
7) TYPE OF WELDING ELECTRODE SHALL BE E70 AND IN ACCORDANCE WITH SPECIFICATION FOR STRUCTURAL STEEL FABRICATION AND ERECTION.
8) FLANGES SHOULD BE CONTINUOUSLY WELDED TO THE WEB.
9) WELDING SPLICE SHALL BE PROVIDED AT SHOP AND NOT PERMITTED AT FIELD.
10) COLUMN SPLICE ELEVATION SHALL BE LOCATED 1.2m OR MORE AWAY FROM THE BEAM-TO-COLUMN CONNECTIONS.
11) 28 DAYS CHARACTERISTIC COMPRESSIVE STRENGTH OF CONCRETE IS 30MPa. (ON CYLINDRICAL SPECIMEN)
12) 28 DAYS CHARACTERISTIC COMPRESSIVE STRENGTH OF LEAN CONCRETE IS 15MPa. (ON CYLINDRICAL SPECIMEN)
13) CONCRETE COVER OVER BARS SHALL BE 75mm FOR FOUNDATION AND 40mm FOR CAST IN-SITU OTHER PARTS.
14) CEMENT TYPE II SHALL BE USED ACCORDING TO GEOTECHNICAL REPORT SUGGESTION.
15) FILL MATERIAL SHALL BE COMPACTED TO NOT LESS THAN 95% OF THE MAXIMUM DENSITY AS DETERMINED BY ASTM D-1557 & ASTM D-1241 (MODIFIED PROCTOR) METHOD.
16) THE EMULSION SHOULD BE USED ON CONCRETE EXPOSED WITH SOIL. B-90-COAT.M.E IS A BITUMEN-BASED ONE-COMPONENT EMULSION PROTECTIVE COATING TO PREVENT THE PENETRATION OF DESTRUCTIVE SALTS & IONS.
THIS MATERIAL IS CONTROLLED ACCORDING TO THE FOLLOWING STANDARDS: ASTM D1227, ASTM D2939, ASTM D1640

±0.00 = +11.10(F.G.L)MSL

LEGEND

F.G.L. : FINISH GROUND LEVEL
T.O.B. : TOP OF BEAM
T.O.F. : TOP OF FOUNDATION
B.O.B.PL. : BOTTOM OF BASE PLATE
C.O.ST. : CENTER OF STRUT
T.O.CR. : TOP OF CRANE
T.O.BR. : TOP OF BROCKET
C.O.ST. : CENTER OF STRUT
N.T.S : NOT TO SCALED

REINFORCED CONCRETE
LEAN CONCRETE
GROUND
BRICK WALL

REFERENCE DRAWING	DRG. No.
CALCULATION REPORT FOR EXTENTION ELECT. BUILDING	BK-GCS-PEDCO-120-ST-CN-0005
FOUNDATION DRAWING FOR EXTENTION OF EXISTING	BK-GCS-PEDCO-120-ST-DW-0063
ARCHITECTURAL DETAIL DRAWING FOR EXTENTION OF EXISTING ELECT. BUILDING	BK-GCS-PEDCO-120-AR-DW-0002
STANDARD DRAWING FOR ANCHOR BOLTS	BK-GNRAL-PEDCO-000-ST-DW-0002
GENERAL NOTES-STEEL STRUCTURES	BK-GNRAL-PEDCO-000-ST-DW-0011
GENERAL NOTES-REINFORCED CONCRETE STRUCTURES	BK-GNRAL-PEDCO-000-ST-DW-0012
SPECIFICATION FOR ERECTION OF STEEL STRUCTURES	BK-GNRAL-PEDCO-000-ST-SP-0005
SPECIFICATION FOR FABRICATION OF STEEL STRUCTURES	BK-GNRAL-PEDCO-000-ST-SP-0003
SPECIFICATION FOR STEEL STRUCTURAL WORK	BK-GNRAL-PEDCO-000-ST-SP-0008
UNIT PLOT PLAN DRAWING	BK-GCS-PEDCO-120-PL-PY-0001
GEOTECHNICAL INVESTIGATION REPORT FOR COMPRESSOR STATION	BK-GCS-PEDCO-120-GT-RT-0001
SPECIFICATION FOR GROUTING	BK-GNRAL-PEDCO-000-ST-SP-0004
SPECIFICATION FOR PAINTING	BK-GNRAL-PEDCO-000-PI-SP-0006
STANDARD DRAWING FOR FIRE PROOFING	BK-GNRAL-PEDCO-000-ST-DW-0001

D02

KEY PLAN

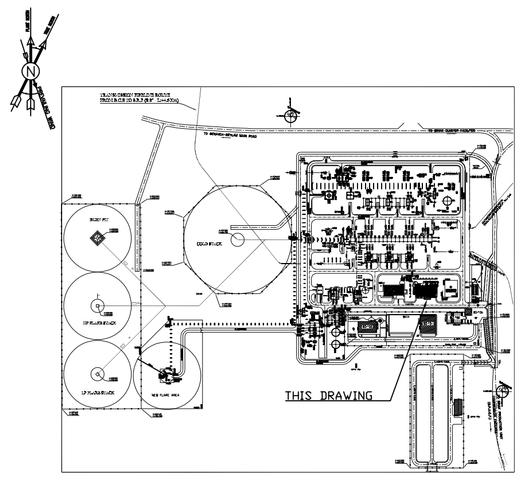

REV.	DATE	P.O.I.S	PREP.	CHK.	APP.	AUT.
D02	AUG.2024	AFC	R.BERLOUIE	M.FAKHARIAN	M.SADEGHIAN	**.**
D01	APR.2024	IFC	R.BERLOUIE	M.FAKHARIAN	S.FARAMARZPOUR	**.**
D00	AUG.2022	IFC	R.BERLOUIE	M.FAKHARIAN	M.MEHRSHAD	**.**

REV.	DESCRIPTION	CHECKED BY	CHECKED DATE	REV. APPR. BY	REV. APPR. DATE
***	**********	**.**	****.****	**.**	****.****

PROJECT NAME: *BINAK OILFIELD DEVELOPMENT/SURFACE FACILITIES GAS COMPRESSOR STATION*

PROJECT NO.: 971020

EPC CONTRACTOR: HIRGAN ENERGY – DESIGN & INSPECTION COMPANIES

EPD/EPC CONTRACTOR (GC): PEDCO — PETROIRAN DEVELOPMENT COMPANY

DRAWING TITLE: *STRUCTURAL DRAWING FOR EXTENTION OF EXISTING ELECT. BUILDING*

اصل و کلیه نسخ این نقشه و حق اقتباس متعلق به شرکت ملی مناطق نفت خیز جنوب میباشد.

THE ORIGINAL AND ALL COPIES OF THIS DRAWING TOGETHER WITH THE COPYRIGHT THEREIN ARE THE SOLE PROPERTY OF N.I.S.O.C./ FIELDS

BINAK OILFIELD DEVELOPMENT SURFACE FACILITIES GAS COMPRESSOR STATION

DATE	SCALE	DRAWING BY	CHECKED BY	PROJECT ENG.

NO CONSTRUCTION PERMITTED UNLESS DRAWING APPROVED

APPROVED FOR CONSTRUCTION BY: DATE:

SCALE	SIZE	DRAWING NO.	SHEET NO.	REV.
AS SHOWN	A1	BK-GCS-PEDCO-120-ST-DW-0064	5 OF 7	D02

BUDGET REF.	LOCATION	SIZE	CLASS	SERIAL NO.	SHEET	REVISION
053-073-9184	F	4	M	709201	5	D02

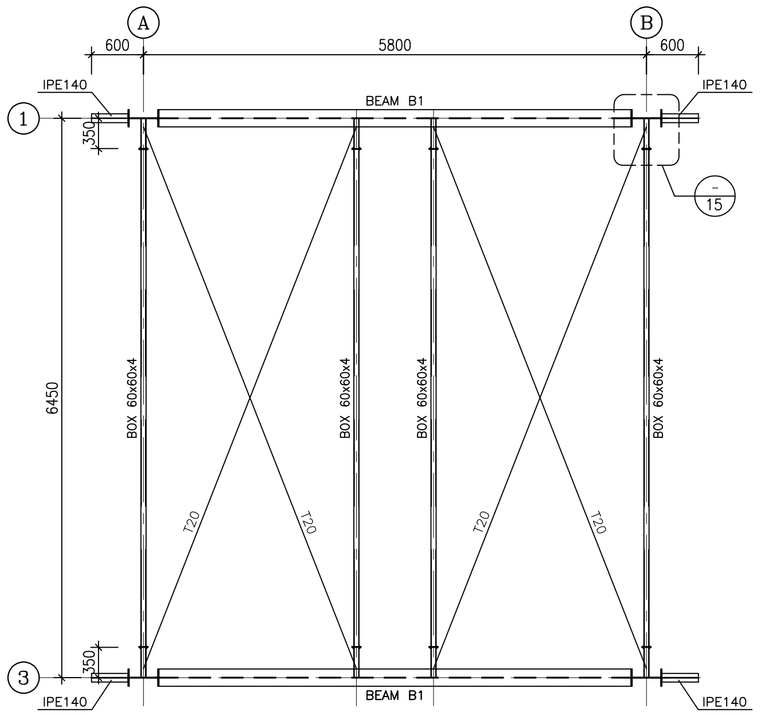

1:100 (1) ROOF HORIZENTAL BRACING PLAN

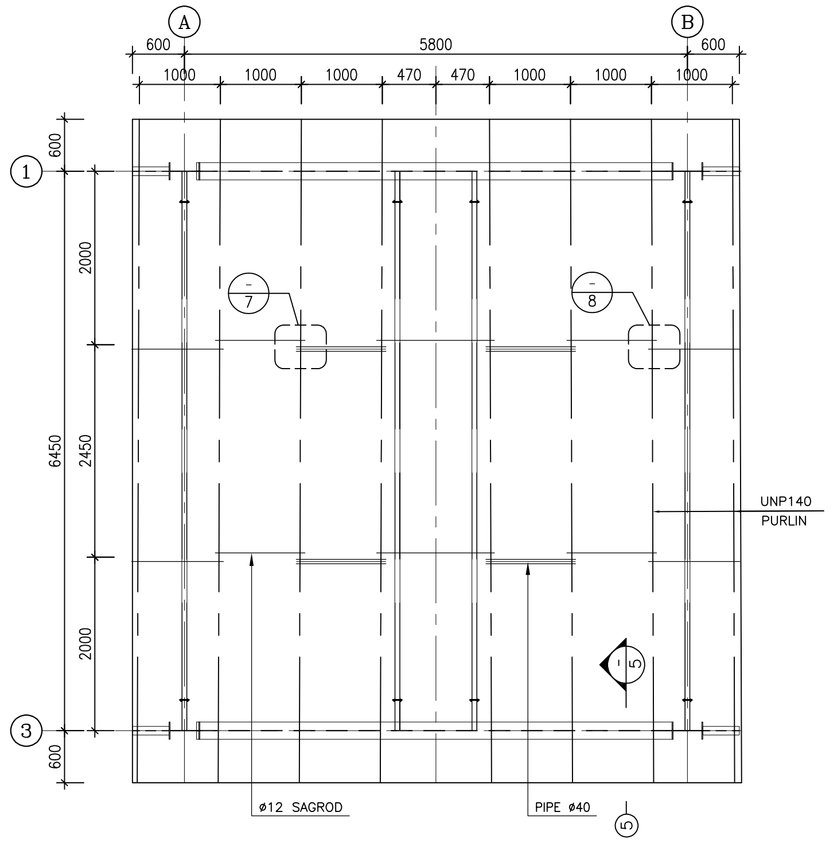

1:100 (2) ROOF PURLIN PLAN

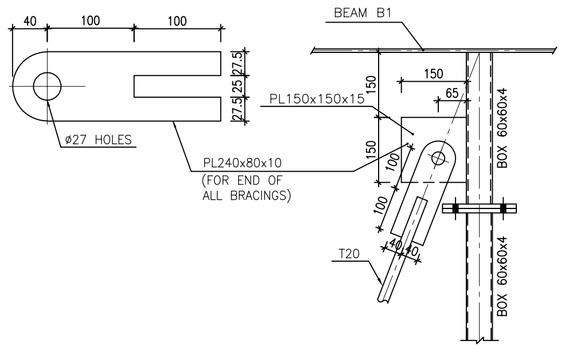

1:10 (3) TYP. ROOF BRACINGS CONNECTION

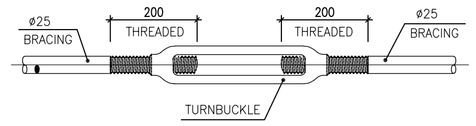

N.T.S. (4) TYP. TURNBUCKLE

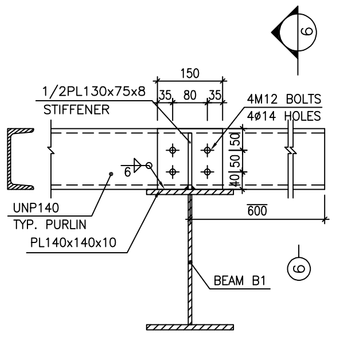

1:10 (5)

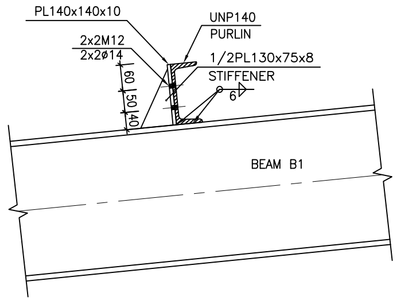

1:10 (6)

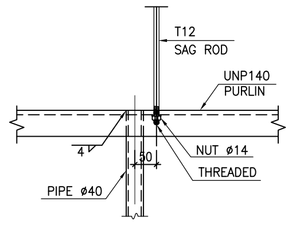

1:10 (7)

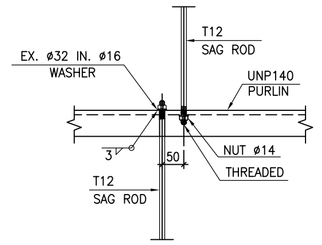

1:10 (8)

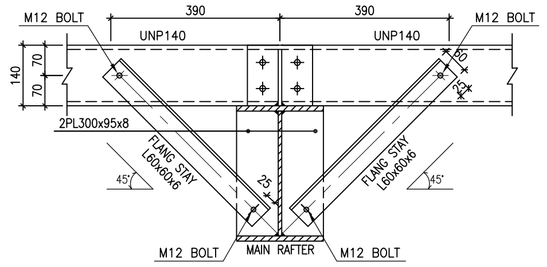

1:10 (9) FLANG STAY TYPICAL DETAIL

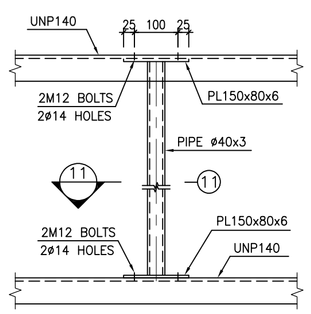

1:10 (10) TYP. PIPE TO PURLIN CONNECTION DETAIL

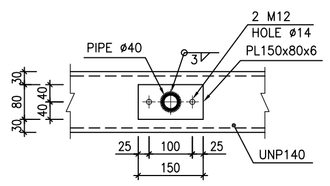

1:10 (11)

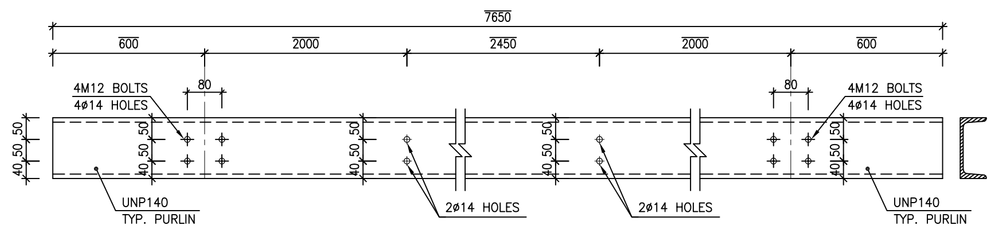

1:10 (12) TYPICAL ROOF PURLIN

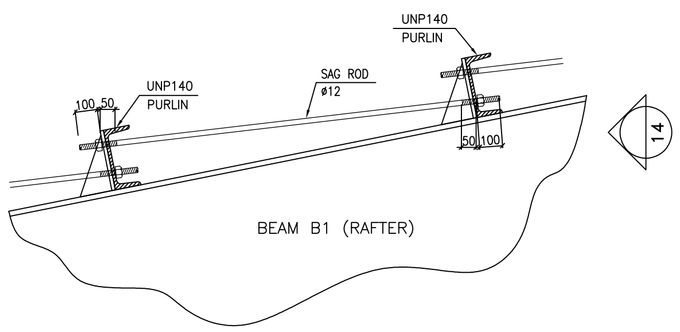

N.T.S. (13) TYPICAL CONNECTION SAGROD TO PURLIN

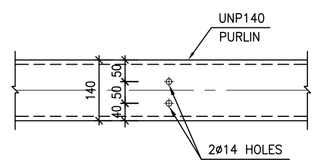

1:10 (14)

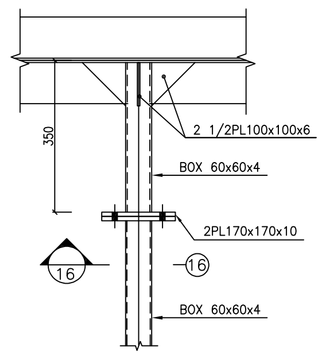

1:10 (15)

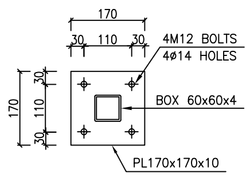

1:10 (16)

NOTES

1) ALL ELEVATIONS AND COORDINATES ARE IN "m" AND DIMENSIONS ARE IN "mm" UNLESS OTHERWISE NOTED.
2) ALL DIMENSIONS AND ELEVATIONS SHALL BE CHECKED BY THE CONTRACTOR PRIOR TO CONSTRUCTION.
3) STRUCTURAL STEEL SHAPE & PLATES SHALL CONFORM TO S235JR WITH MINIMUM YIELD STRESS OF Fy=2400 kg/cm².
4) ALL BOLTS ARE HIGH STRENGTH BOLTS GRADE 8.8 WITH MINIMUM TENSILE STRENGTH OF Fu=800 MPa.
5) ANCHOR BOLTS SHALL BE ASTM A307 GRADE C.
6) ALL WELDING SHALL BE IN ACCORDANCE WITH THE LATEST EDITION OF STRUCTURAL WELDING CODE, AWS D1.1/D1.1M.
7) TYPE OF WELDING ELECTRODE SHALL BE E70 AND IN ACCORDANCE WITH SPECIFICATION FOR STRUCTURAL STEEL FABRICATION AND ERECTION.
8) FLANGES SHOULD BE CONTINUOUSLY WELDED TO THE WEB.
9) WELDING SPLICE SHALL BE PROVIDED AT SHOP AND NOT PERMITTED AT FIELD.
10) COLUMN SPLICE ELEVATION SHALL BE LOCATED 1.2m OR MORE AWAY FROM THE BEAM-TO-COLUMN CONNECTIONS.
11) 28 DAYS CHARACTERISTIC COMPRESSIVE STRENGTH OF CONCRETE IS 30MPa. (ON CYLINDRICAL SPECIMEN)
12) 28 DAYS CHARACTERISTIC COMPRESSIVE STRENGTH OF LEAN CONCRETE IS 15MPa. (ON CYLINDRICAL SPECIMEN)
13) CONCRETE COVER OVER BARS SHALL BE 75mm FOR FOUNDATION AND 40mm FOR CAST IN-SITU OTHER PARTS.
14) CEMENT TYPE II SHALL BE USED ACCORDING TO GEOTECHNICAL REPORT SUGGESTION.
15) FILL MATERIAL SHALL BE COMPACTED TO NOT LESS THAN 95% OF THE MAXIMUM DENSITY AS DETERMINED BY ASTM D-1557 & ASTM D-1241 (MODIFIED PROCTOR) METHOD.
16) THE EMULSION SHOULD BE USED ON CONCRETE EXPOSED WITH SOIL. B-90-COAT.M.E IS A BITUMEN-BASED ONE-COMPONENT EMULSION PROTECTIVE COATING TO PREVENT THE PENETRATION OF DESTRUCTIVE SALTS & IONS.
THIS MATERIAL IS CONTROLLED ACCORDING TO THE FOLLOWING STANDARDS: ASTM D1227, ASTM D2939, ASTM D1640

±0.00 = +11.10(F.G.L)MSL

LEGEND

F.G.L.	: FINISH GROUND LEVEL		REINFORCED CONCRETE
T.O.B.	: TOP OF BEAM		LEAN CONCRETE
T.O.F.	: TOP OF FOUNDATION		GROUND
B.O.B.PL.	: BOTTOM OF BASE PLATE		BRICK WALL
C.O.ST.	: CENTER OF STRUT		
T.O.CR.	: TOP OF CRANE		
T.O.BR.	: TOP OF BROCKET		
C.O.ST.	: CENTER OF STRUT		
N.T.S	: NOT TO SCALED		

REFERENCE DRAWING	DRG. No.
CALCULATION REPORT FOR EXTENTION ELECT. BUILDING	BK-GCS-PEDCO-120-ST-CN-0005
FOUNDATION DRAWING FOR EXTENTION OF EXISTING	BK-GCS-PEDCO-120-ST-DW-0063
ARCHITECTURAL DETAIL DRAWING FOR EXTENTION OF EXISTING ELECT. BUILDING	BK-GCS-PEDCO-120-AR-DW-0002
STANDARD DRAWING FOR ANCHOR BOLTS	BK-GNRAL-PEDCO-000-ST-DW-0002
GENERAL NOTES-STEEL STRUCTURES	BK-GNRAL-PEDCO-000-ST-DW-0011
GENERAL NOTES-REINFORCED CONCRETE STRUCTURES	BK-GNRAL-PEDCO-000-ST-DW-0012
SPECIFICATION FOR ERECTION OF STEEL STRUCTURES	BK-GNRAL-PEDCO-000-ST-SP-0005
SPECIFICATION FOR FABRICATION OF STEEL STRUCTURES	BK-GNRAL-PEDCO-000-ST-SP-0003
SPECIFICATION FOR STEEL STRUCTURAL WORK	BK-GNRAL-PEDCO-000-ST-SP-0008
UNIT PLOT PLAN DRAWING	BK-GCS-PEDCO-120-PL-PY-0001
GEOTECHNICAL INVESTIGATION REPORT FOR COMPRESSOR STATION	BK-GCS-PEDCO-120-GT-RT-0001
SPECIFICATION FOR GROUTING	BK-GNRAL-PEDCO-000-ST-SP-0004
SPECIFICATION FOR PAINTING	BK-GNRAL-PEDCO-000-PL-SP-0006
STANDARD DRAWING FOR FIRE PROOFING	BK-GNRAL-PEDCO-000-ST-DW-0001

D02

KEY PLAN

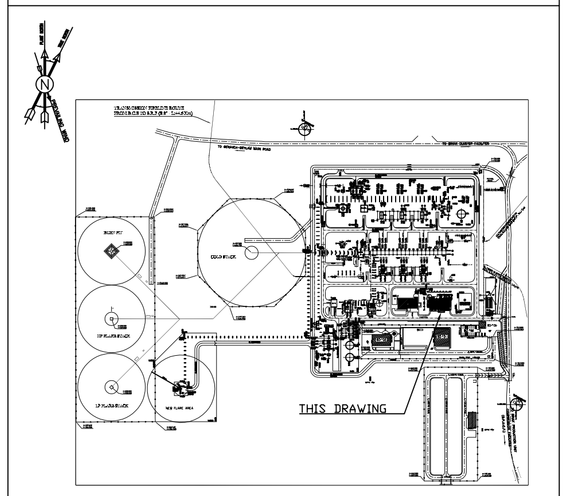

REV.	DATE	P.O.I.S	PREP.	CHK.	APP.	AUT.
D02	AUG.2024	AFC	R.BERLOUIE	M.FAKHARIAN	M.SADEGHIAN	**.**
D01	APR.2024	IFC	R.BERLOUIE	M.FAKHARIAN	S.FARAMARZPOUR	**.**
D00	AUG.2022	IFC	R.BERLOUIE	M.FAKHARIAN	M.MEHRSHAD	**.**

REV.	DESCRIPTION	CHECKED BY	CHECKED DATE	REV. APPR. BY	REV. APPR. DATE
***	**********	**.**	****.****	**.**	****.****

PROJECT NAME: *BINAK OILFIELD DEVELOPMENT/SURFACE FACILITIES GAS COMPRESSOR STATION*

PROJECT NO.: 971020

EPC CONTRACTOR: HIRGAN ENERGY – DESIGN & INSPECTION COMPANIES

EPD/EPC CONTRACTOR (GC): PEDCO — PETROIRAN DEVELOPMENT COMPANY

DRAWING TITLE: *STRUCTURAL DRAWING FOR EXTENTION OF EXISTING ELECT. BUILDING*

SCALE	SIZE	DRAWING NO.	SHEET NO.	REV.
AS SHOWN	A1	BK-GCS-PEDCO-120-ST-DW-0064	6 OF 7	D02

اصل و کلیه نسخ این نقشه و حق اقتباس متعلق به شرکت ملی مناطق نفت خیز جنوب میباشد.

THE ORIGINAL AND ALL COPIES OF THIS DRAWING TOGETHER WITH THE COPYRIGHT THEREIN ARE THE SOLE PROPERTY OF N.I.S.O.C./ FIELDS

BINAK OILFIELD DEVELOPMENT SURFACE FACILITIES GAS COMPRESSOR STATION

DATE	SCALE	DRAWING BY	CHECKED BY	PROJECT ENG.

NO CONSTRUCTION PERMITTED UNLESS DRAWING APPROVED

APPROVED FOR CONSTRUCTION BY: DATE:

BUDGET REF.	LOCATION	SIZE	CLASS	SERIAL NO.	SHEET	REVISION
053-073-9184	F	4	M	709201	6	D02

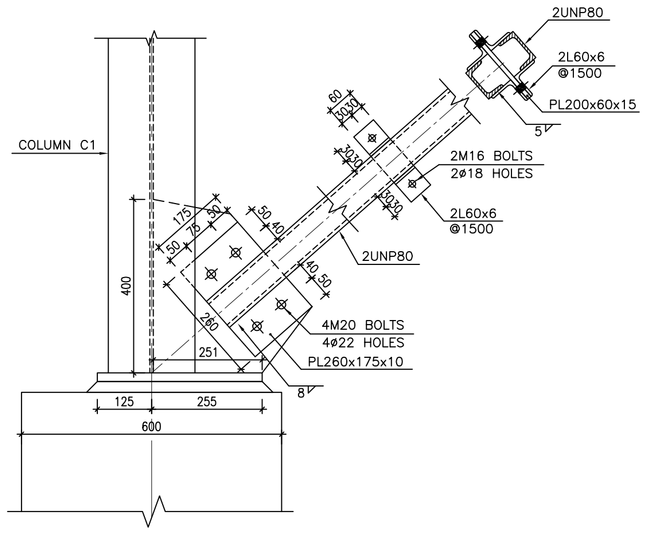

1:10 (5/7 1)

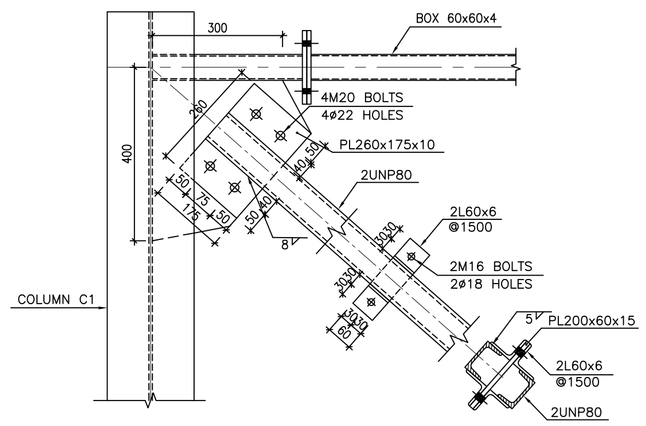

1:10 (5/7 2)

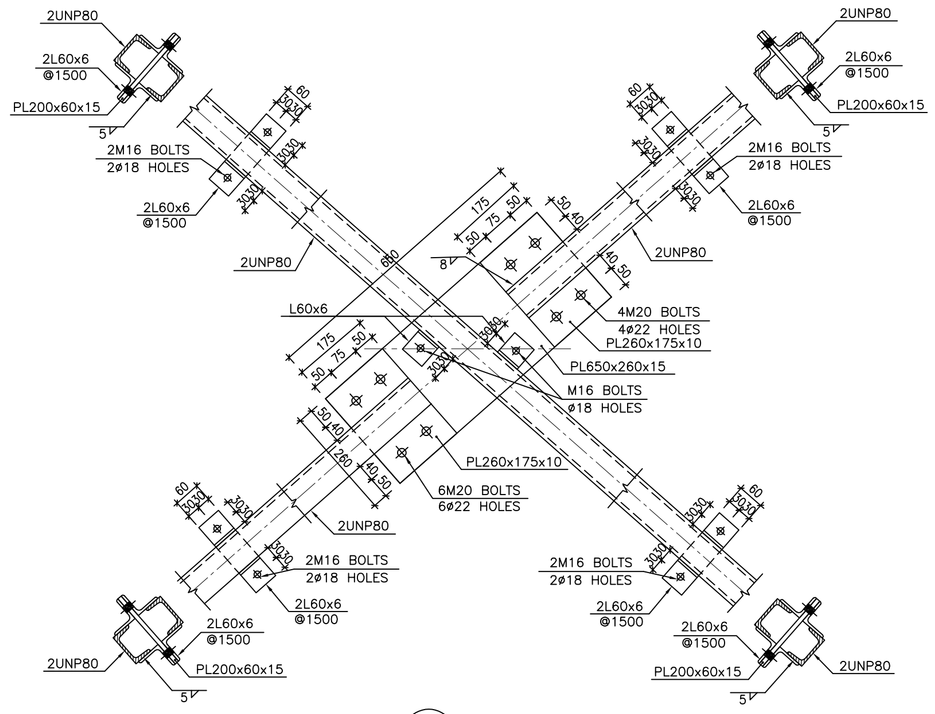

1:10 (5/7 3)

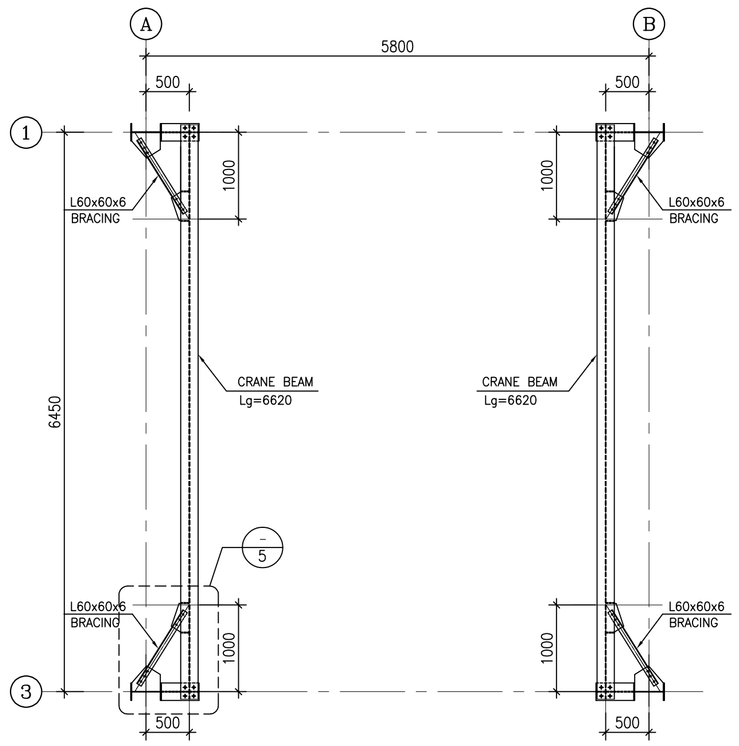

1:50 (4) RUNWAY BEAM LAYOUT PLAN

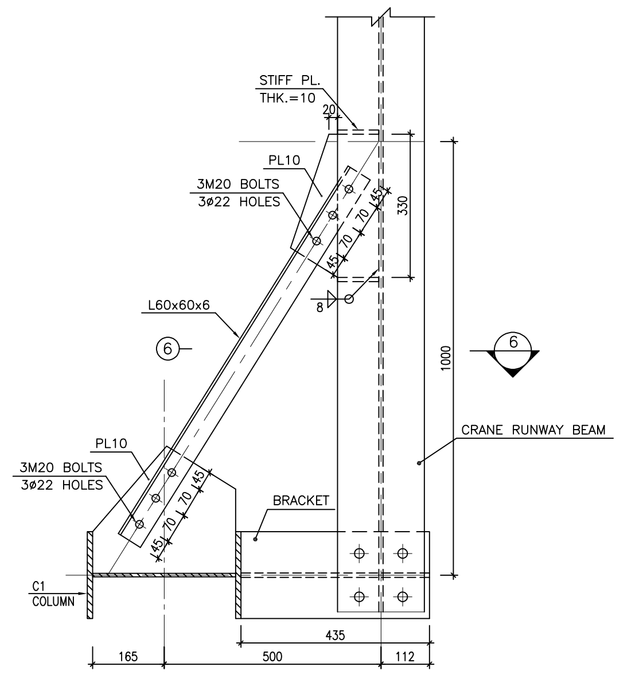

1:10 (5)

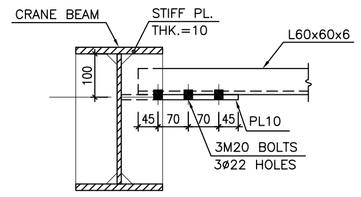

1:10 (6)

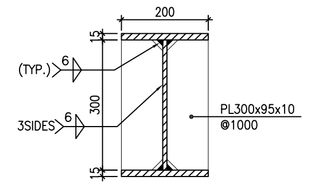

1:10 (7) CRANE RUNWAY BEAM

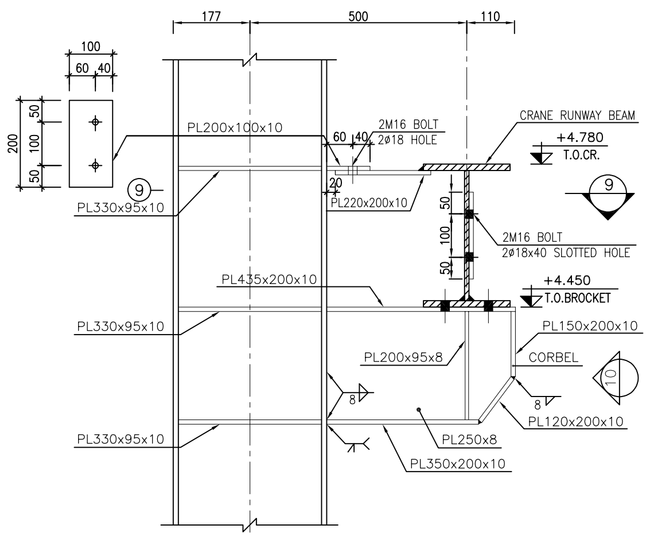

1:10 (5/7 8)

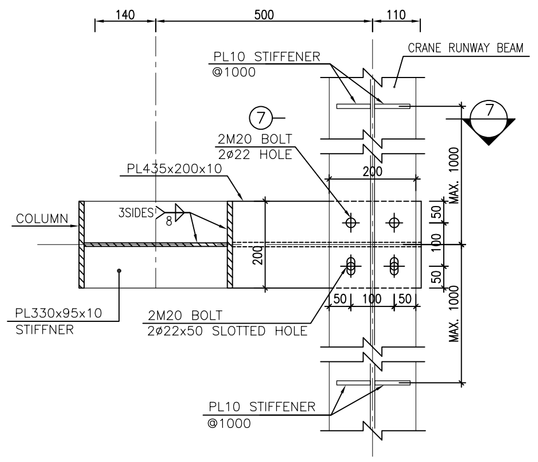

1:10 (9)

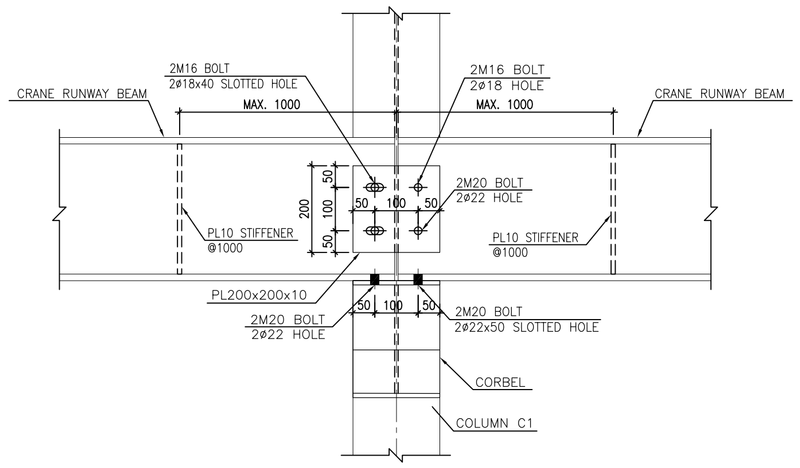

1:10 (10)

NOTES

1) ALL ELEVATIONS AND COORDINATES ARE IN "m" AND DIMENSIONS ARE IN "mm" UNLESS OTHERWISE NOTED.
2) ALL DIMENSIONS AND ELEVATIONS SHALL BE CHECKED BY THE CONTRACTOR PRIOR TO CONSTRUCTION.
3) STRUCTURAL STEEL SHAPE & PLATES SHALL CONFORM TO S235JR WITH MINIMUM YIELD STRESS OF Fy=2400 kg/cm².
4) ALL BOLTS ARE HIGH STRENGTH BOLTS GRADE 8.8 WITH MINIMUM TENSILE STRENGTH OF Fu=800 MPa.
5) ANCHOR BOLTS SHALL BE ASTM A307 GRADE C.
6) ALL WELDING SHALL BE IN ACCORDANCE WITH THE LATEST EDITION OF STRUCTURAL WELDING CODE, AWS D1.1/D1.1M.
7) TYPE OF WELDING ELECTRODE SHALL BE E70 AND IN ACCORDANCE WITH SPECIFICATION FOR STRUCTURAL STEEL FABRICATION AND ERECTION.
8) FLANGES SHOULD BE CONTINUOUSLY WELDED TO THE WEB.
9) WELDING SPLICE SHALL BE PROVIDED AT SHOP AND NOT PERMITTED AT FIELD.
10) COLUMN SPLICE ELEVATION SHALL BE LOCATED 1.2m OR MORE AWAY FROM THE BEAM-TO-COLUMN CONNECTIONS.
11) 28 DAYS CHARACTERISTIC COMPRESSIVE STRENGTH OF CONCRETE IS 30MPa. (ON CYLINDRICAL SPECIMEN)
12) 28 DAYS CHARACTERISTIC COMPRESSIVE STRENGTH OF LEAN CONCRETE IS 15MPa. (ON CYLINDRICAL SPECIMEN)
13) CONCRETE COVER OVER BARS SHALL BE 75mm FOR FOUNDATION AND 40mm FOR CAST IN-SITU OTHER PARTS.
14) CEMENT TYPE II SHALL BE USED ACCORDING TO GEOTECHNICAL REPORT SUGGESTION.
15) FILL MATERIAL SHALL BE COMPACTED TO NOT LESS THAN 95% OF THE MAXIMUM DENSITY AS DETERMINED BY ASTM D-1557 & ASTM D-1241 (MODIFIED PROCTOR) METHOD.
16) THE EMULSION SHOULD BE USED ON CONCRETE EXPOSED WITH SOIL. B-90-COAT.M.E IS A BITUMEN-BASED ONE-COMPONENT EMULSION PROTECTIVE COATING TO PREVENT THE PENETRATION OF DESTRUCTIVE SALTS & IONS.
THIS MATERIAL IS CONTROLLED ACCORDING TO THE FOLLOWING STANDARDS: ASTM D1227, ASTM D2939, ASTM D1640

±0.00 = +11.10(F.G.L)MSL

LEGEND

F.G.L. : FINISH GROUND LEVEL
T.O.B. : TOP OF BEAM
T.O.F. : TOP OF FOUNDATION
B.O.B.PL. : BOTTOM OF BASE PLATE
C.O.ST. : CENTER OF STRUT
T.O.CR. : TOP OF CRANE
T.O.BR. : TOP OF BROCKET
C.O.ST. : CENTER OF STRUT
N.T.S : NOT TO SCALED

REINFORCED CONCRETE
LEAN CONCRETE
GROUND
BRICK WALL

REFERENCE DRAWING	DRG. No.
CALCULATION REPORT FOR EXTENTION ELECT. BUILDING	BK-GCS-PEDCO-120-ST-CN-0005
FOUNDATION DRAWING FOR EXTENTION OF EXISTING	BK-GCS-PEDCO-120-ST-DW-0063
ARCHITECTURAL DETAIL DRAWING FOR EXTENTION OF EXISTING ELECT. BUILDING	BK-GCS-PEDCO-120-AR-DW-0002
STANDARD DRAWING FOR ANCHOR BOLTS	BK-GNRAL-PEDCO-000-ST-DW-0002
GENERAL NOTES-STEEL STRUCTURES	BK-GNRAL-PEDCO-000-ST-DW-0011
GENERAL NOTES-REINFORCED CONCRETE STRUCTURES	BK-GNRAL-PEDCO-000-ST-DW-0012
SPECIFICATION FOR ERECTION OF STEEL STRUCTURES	BK-GNRAL-PEDCO-000-ST-SP-0005
SPECIFICATION FOR FABRICATION OF STEEL STRUCTURES	BK-GNRAL-PEDCO-000-ST-SP-0003
SPECIFICATION FOR STEEL STRUCTURAL WORK	BK-GNRAL-PEDCO-000-ST-SP-0008
UNIT PLOT PLAN DRAWING	BK-GCS-PEDCO-120-PL-PY-0001
GEOTECHNICAL INVESTIGATION REPORT FOR COMPRESSOR STATION	BK-GCS-PEDCO-120-GT-RT-0001
SPECIFICATION FOR GROUTING	BK-GNRAL-PEDCO-000-ST-SP-0004
SPECIFICATION FOR PAINTING	BK-GNRAL-PEDCO-000-PL-SP-0006
D02 STANDARD DRAWING FOR FIRE PROOFING	BK-GNRAL-PEDCO-000-ST-DW-0001

KEY PLAN

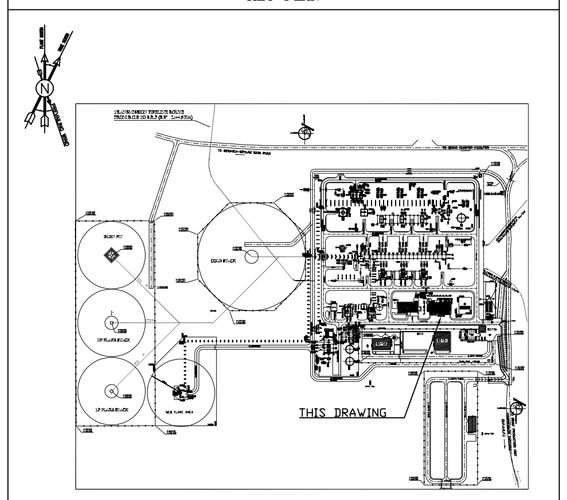

REV.	DATE	P.O.I.S	PREP.	CHK.	APP.	AUT.
D02	AUG.2024	AFC	R.BERLOUIE	M.FAKHARIAN	M.SADEGHIAN	**.**
D01	APR.2024	IFC	R.BERLOUIE	M.FAKHARIAN	S.FARAMARZPOUR	**.**
D00	AUG.2022	IFC	R.BERLOUIE	M.FAKHARIAN	M.MEHRSHAD	**.**

REV.	DESCRIPTION	CHECKED BY	DATE	REV. APPR. BY	DATE
***	**********	**.**	***.****	**.**	***.****

PROJECT NAME: *BINAK OILFIELD DEVELOPMENT/SURFACE FACILITIES GAS COMPRESSOR STATION*

PROJECT NO.: 971020

EPC CONTRACTOR: HIRGAN ENERGY – DESIGN & INSPECTION COMPANIES

EPD/EPC CONTRACTOR (GC): PETROIRAN DEVELOPMENT COMPANY (PEDCO)

اصل و کلیه نسخ این نقشه و حق اقتباس متعلق به شرکت ملی مناطق نفت خیز جنوب میباشد.

THE ORIGINAL AND ALL COPIES OF THIS DRAWING TOGETHER WITH THE COPYRIGHT THEREIN ARE THE SOLE PROPERTY OF N.I.S.O.C./ FIELDS

BINAK OILFIELD DEVELOPMENT SURFACE FACILITIES GAS COMPRESSOR STATION

DATE	SCALE	DRAWING BY	CHECKED BY	PROJECT ENG.

DRAWING TITLE: *STRUCTURAL DRAWING FOR EXTENTION OF EXISTING ELECT. BUILDING*

NO CONSTRUCTION PERMITTED UNLESS DRAWING APPROVED

APPROVED FOR CONSTRUCTION BY: DATE:

SCALE	SIZE	DRAWING NO.	SHEET NO.	REV.
AS SHOWN	A1	BK-GCS-PEDCO-120-ST-DW-0064	7 OF 7	D02

BUDGET REF.	LOCATION	SIZE	CLASS	SERIAL NO.	SHEET	REVISION
053-073-9184	F	4	M	709201	7	D02