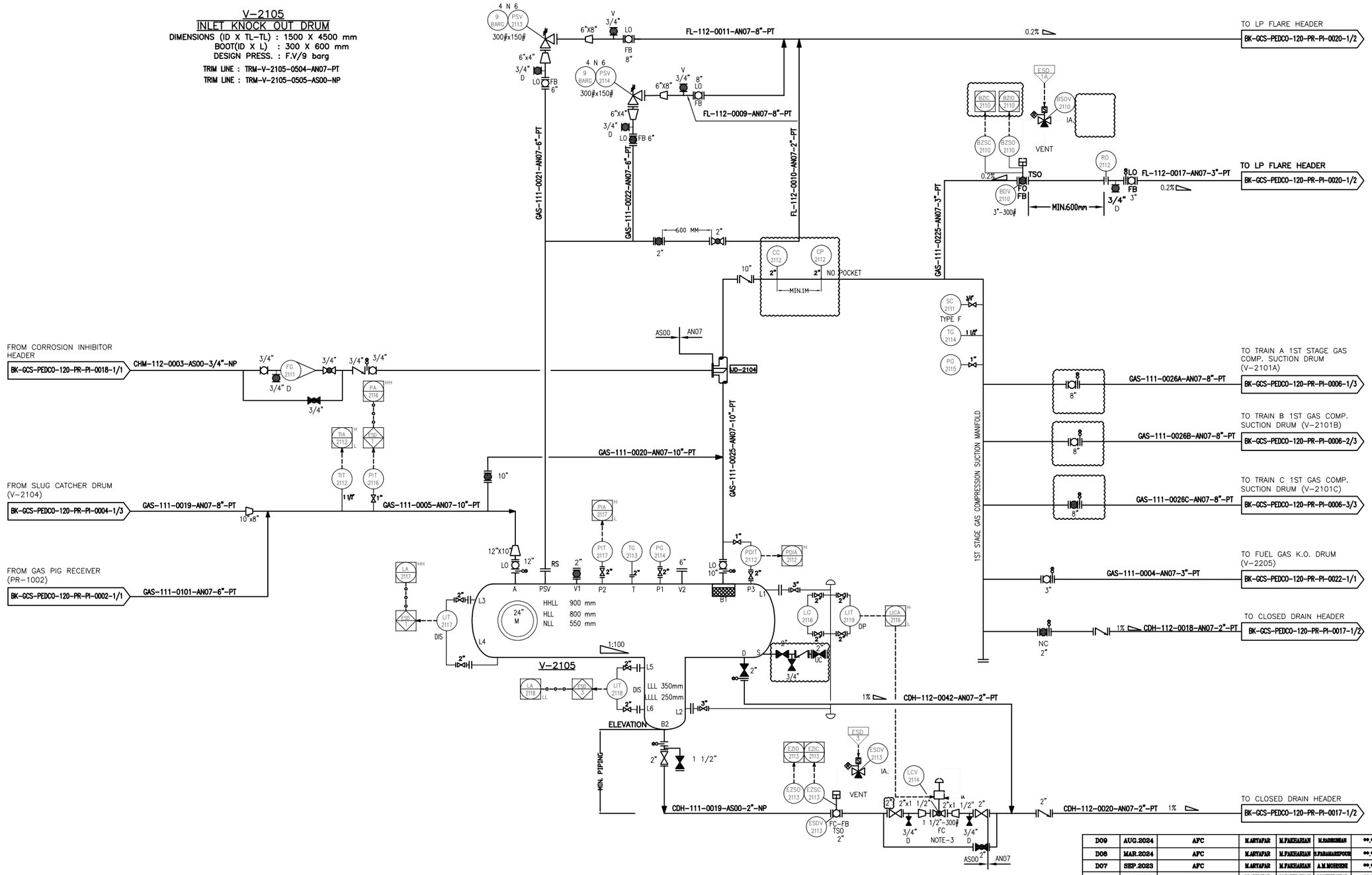

NOTES

1- DELETED.

2- DELETED.

3-CONTROL VALVE SIZING WILL BE FINALIZED BY VENDOR.

4-PARTIAL STROK DEVICE TO BE CONSIDERED FOR ALL ESDV'S ACTIVATED BY ESD 1,0.

5- ALL DRAIN LINE SHALL BE CONNECTED TO CLOSED DRAIN HEADER AND ALL VENT LINES SHALL BE CONNECTED TO THE FLARE HEADER.

LEGEND

REFERENCE DRAWING	DRG. No.
Process Flow Diagram	BK-GCS-PEDCO-120-PR-PF-0001
Symbol & Legend For PFD and P&ID	BK-GCS-PEDCO-120-PR-PI-0001

KEY PLAN

TYPE 1

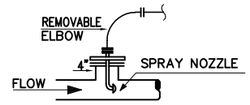

INJECTION DEVICE PERMANENTLY CONNECTED
(GAS SERVICE)

REV.	DATE	P.O.I.S	PREP.	CHK.	APP.	AUT.
D09	AUG.2024	AFC	M.ARYAFAR	M.FAKHARIAN	M.SADEGHIAN	**.**
D08	MAR.2024	AFC	M.ARYAFAR	M.FAKHARIAN	R.PARAMARZPOUR	**.**
D07	SEP.2023	AFC	M.ARYAFAR	M.FAKHARIAN	A.M.MORSENI	**.**
D06	APR.2023	IFA	M.ARYAFAR	M.FAKHARIAN	M.MEHRSHAD	**.**
D05	DEC.2022	IFA	M.ARYAFAR	M.FAKHARIAN	M.MEHRSHAD	**.**
D04	AUG.2022	IFA	M.ARYAFAR	M.FAKHARIAN	M.MEHRSHAD	**.**
D03	JUN.2022	IFA	M.ARYAFAR	M.FAKHARIAN	M.MEHRSHAD	**.**
D02	MAR.2022	IFA	M.ARYAFAR	M.FAKHARIAN	M.MEHRSHAD	**.**
D01	JAN.2022	IFA	M.ARYAFAR	M.FAKHARIAN	M.MEHRSHAD	**.**
D00	SEP.2021	IFC	M.ARYAFAR	M.FAKHARIAN	M.MEHRSHAD	**.**

REV.	DESCRIPTION	CHECKED BY	CHECKED DATE	REV. APPR. BY	REV. APPR. DATE
***	**********	**.**	***.****	**.**	***.****

PROJECT NAME: BINAK OILFIELD DEVELOPMENT/SURFACE FACILITIES GAS COMPRESSOR STATION

PROJECT NO.: 971020

EPC CONTRACTOR: HIRGAN ENERGY - DESIGN & INSPECTION COMPANIES

EPD/EPC CONTRACTOR (GC): PETROIRAN DEVELOPMENT COMPANY (PEDCO)

اصل و کلیه نسخ این نقشه و حق اقتباس متعلق به شرکت ملی مناطق نفت خیز جنوب میباشد.

THE ORIGINAL AND ALL COPIES OF THIS DRAWING TOGETHER WITH THE COPYRIGHT THEREIN ARE THE SOLE PROPERTY OF N.I.S.O.C./ FIELDS

BINAK OILFIELD DEVELOPMENT
SURFACE FACILITIES
GAS COMPRESSOR STATION

DATE	SCALE	DRAWING BY	CHECKED BY	PROJECT ENG.

NO CONSTRUCTION PERMITTED UNLESS DRAWING APPROVED

APPROVED FOR CONSTRUCTION BY: DATE:

(VENDOR TITLE BLOCK)**

DRAWING TITLE: P&ID - GAS COMPRESSION INLET KNOCK OUT DRUM

SCALE	SIZE	DRAWING NO.	SHEET NO.	REV.
NS	A3	BK-GCS-PEDCO-120-PR-PI-0005	1 OF 1	D09

BUDGET REF.	LOCATION	SIZE	CLASS	SERIAL NO.	SHEET	REVISION
053-073-9184	F	2	A	706783	1 OF 1	D09