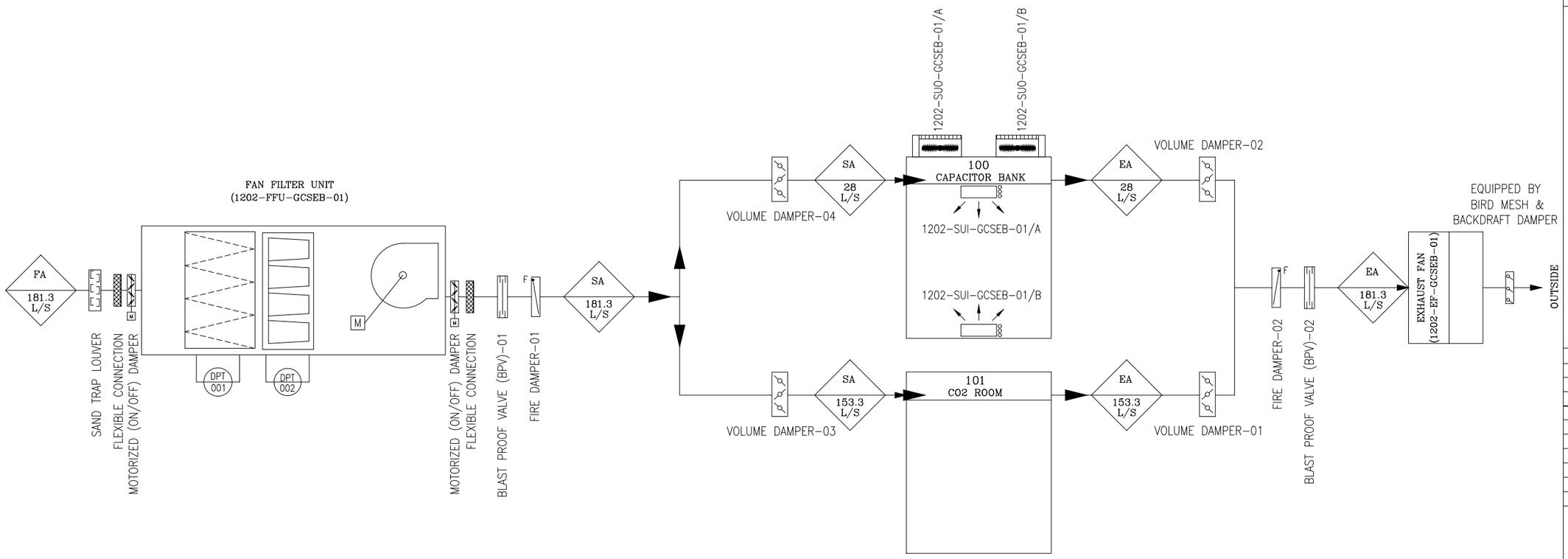

HVAC FLOW DIAGRAM

SC. N.T.S

NOTES

1. CONTRACTOR SHALL COMPARE ALL ARCHITECTURAL, MECHANICAL, ELECTRICAL, PIPING AND STRUCTURAL DRAWINGS AND IN CASE OF ANY CONFLICTS OR DISCREPANCY, INFORM THE ENGINEER.
2. ALL MATERIALS ARE SELECTED FROM THE HIGHEST QUALITY AND MUST BE APPROVED BY THE CLIENT.
3. ALL OPENINGS SHALL BE CONSIDERED AS PER RELATED DRAWINGS BEFORE CONSTRUCTION.
4. ALL REFRIGERANT PIPE, FITTING AND INSULATION SHALL BE ACCORDING TO NIBC #14.
5. PIPE SUPPORT DETAIL DRAWING SHALL BE ACCORDING TO STANDARD DRAWING FOR HVAC & PLUMBING
6. MATERIAL OF CONDENSATE PIPES SHALL BE POLYPROPYLENE (PP) ACCORDING TO ASTM F2389 OR ISIRI 6314-1,2.
7. REFRIGERATION PIPING, FITTING, INSULATION SIZES AND DETAILS WILL BE SPECIFIED BY VENDOR.

LEGEND

REFERENCE DOCUMENTS	DRG. No.
HVAC & PLUMBING DESIGN CRITERIA	BK-GNRAL-PEDCO-000-HV-DC-0001
SPECIFICATION FOR HVAC EQUIPMENT	BK-GNRAL-PEDCO-000-HV-SP-0001
SPECIFICATION FOR DUCT WORK & PIPE WORK	BK-GNRAL-PEDCO-000-HV-SP-0002
STANDARD DRAWING FOR HVAC & PLUMBING	BK-GNRAL-PEDCO-000-HV-DW-0001
SYMBOL & LEGEND FOR HVAC & PLUMBING	BK-GNRAL-PEDCO-000-HV-DW-0002
HVAC CALCULATION NOTE FOR EXTENSION OF EXISTING ELECT. BUILDING	BK-GCS-PEDCO-120-HV-CN-0002
DATA SHEETS FOR MAIN HVAC EQUIPMENT OF EXTENSION OF EXISTING ELECT. BUILDING	BK-GCS-PEDCO-120-HV-DT-0002
HVAC I&C DIAGRAM FOR EXTENSION OF EXISTING ELECT. BUILDING	BK-GCS-PEDCO-120-HV-DG-0004
ARCHITECTURAL DETAIL DRAWING FOR EXTENSION OF EXISTING ELECT. BUILDING	BK-GCS-PEDCO-120-AR-DW-0002
UNIT PLOT PLAN DRAWING	BK-GCS-PEDCO-120-PI-PY-0001

KEY PLAN

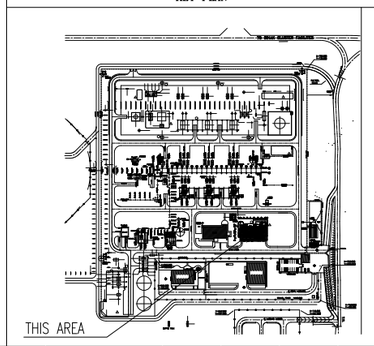

REV.	DATE	P.O.I.S	PREP.	CHK.	APP.	AUT.
D01	FEB.2025	IFA	K.AHMADI	M.FAKHARIAN	S.FARAMARZPOUR	**.**
D00	JUN.2022	IFC	H.ADINEH	M.FAKHARIAN	S.FARAMARZPOUR	**.**

REV.	DESCRIPTION	BY	DATE	BY	DATE
***	**********	**.**	***.****	**.**	***.****
		CHECKED		REV. APPR.	

PROJECT NAME: BINAK OILFIELD DEVELOPMENT/SURFACE FACILTIES GAS COMPRESSOR STATION

PROJECT NO.: 971020

EPC CONTRACTOR: HIRGAN ENERGY – DESIGN & INSPECTION COMPANIES

EPD/EPC CONTRACTOR (GC): PETROIRAN DEVELOPMENT COMPANY (PEDCO)

DRAWING TITLE: HVAC FLOW DIAGRAM FOR EXTENSION OF EXISTING ELECT. BUILDING

اصل و کلیه نسخ این نقشه و حق اقتباس متعلق به شرکت ملی مناطق نفت خیز جنوب میباشد.

THE ORIGINAL AND ALL COPIES OF THIS DRAWING TOGETHER WITH THE COPYRIGHT THEREIN ARE THE SOLE PROPERTY OF N.I.S.O.C./ FIELDS

BINAK OILFIELD DEVELOPMENT
SURFACE FACILITIES
GAS COMPRESSOR STATION

DATE	SCALE	DRAWING BY	CHECKED BY	PROJECT ENG.

NO CONSTRUCTION PERMITTED UNLESS DRAWING APPROVED

APPROVED FOR CONSTRUCTION BY: DATE:

SCALE	SIZE	DRAWING NO.	SHEET NO.	REV.	BUDGET REF.	LOCATION	SIZE	CLASS	SERIAL NO.	SHEET	REVISION
AS SHOWN	A3	BK-GCS-PEDCO-120-HV-DG-0003	1 OF 1	D01	053-073-9184	F	4	A	708876	1 OF 1	D01