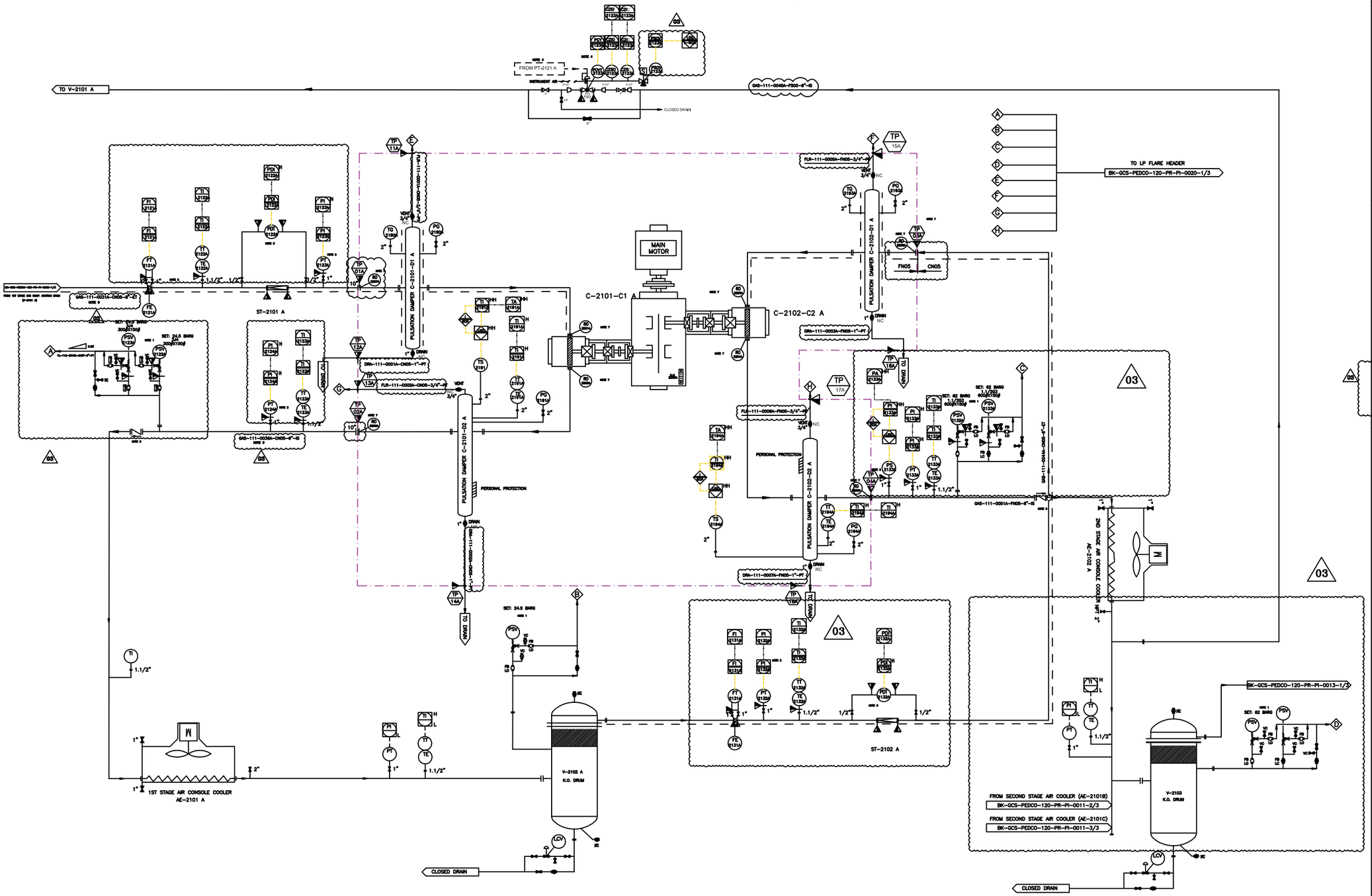

REFERENCE DRAWINGS	DWG. NUMBER
1. MECHANICAL DATA SHEETS FOR GAS COMPRESSORS PACKAGES	BK-GCS-PEDCO-120-ME-DT-0031_D06
2.1st STAGE GAS COMPRESSION SUCTION DRUMS	BK-GCS-PEDCO-120-PR-PI-0006_D06
3.1st STAGE GAS COMPRESSION COMPRESSORS	BK-GCS-PEDCO-120-PR-PI-0007_D06
4.1st STAGE GAS COMPRESSION AIR COOLERS	BK-GCS-PEDCO-120-PR-PI-0008_D06
5.2nd STAGE GAS COMPRESSION SUCTION DRUMS	BK-GCS-PEDCO-120-PR-PI-0009_D06
6.2nd STAGE GAS COMPRESSION COMPRESSORS	BK-GCS-PEDCO-120-PR-PI-0010_D06
7.2nd STAGE GAS COMPRESSION AIR COOLERS	BK-GCS-PEDCO-120-PR-PI-0011_D06
8.2nd STAGE GAS COMPRESSION DISCHARGE DRUM	BK-GCS-PEDCO-120-PR-PI-0012_D06
9.PIPING MATERIAL SPECIFICATION	BK-GCS-PEDCO-120-PR-SP-0001-D01
10.All TAG INSTREUMENTS RAG NUMBER ARE START WITH PREFIX C	

Note :

1. PSV WILL BE SIZED LATER. THE SUPPLY IS LOOSE.
2. INSTRUMENTS WILL BE SUPPLIED LOOSE ON CLIENT LINE.
3. THE FILTER AND PDT WILL BE SUPPLIED LOOSE ON CLIENT LINE.
4. SPILL BACK VALVE WILL BE SUPPLIED BY VENDOR AS LOOSE ITEM. PT-2121A WILL BE SENT FROM DCS TO UCP BY CLIENT.
5. NON SLAM TYPE CHECK VALVE.
6. All INSTRUMENTS TAG NUMBER ARE START WITH PREFIX C
7. The RO REQUIREMENT WILL BE FINALIZED AFTER PULSATION STUDY.
8. THE STATUS OF XV-2121 A AND XV-2133 A ARE SENT TO UCP FOR COMPRESSOR START PERMISSION. COMPRESSOR START PERMISSION IS GIVEN WHILE THESE VALVES ARE OPEN. PSOV-2121A,XZIC-2121A,XZIO,2121A WILL BE CONNECTED TO UCP.
~~PSOV-2123A,XZIC-2123A,XZIO,2123A WILL BE CONNECTED~~ TO UCP.
9. THE LINE SHALL BE EXPANDED TO THE B.L. FLANGE SIZE AND BE ACCORDING TO THE B.L. PIPING CLASS.
10. All hook up material for instrument of Havayar battery limit will be supplied by Havayar.

Legend :

C-2101-C1 A

1ST STAGE COMPRESSOR CYLINDER	
INLET PRESSURE (barg)	4.8
OUTLET PRESSURE (barg)	18
RATED CAPACITY (kg/h)	8935.5

C-2102-C2 A

2ND STAGE COMPRESSOR CYLINDER	
INLET PRESSURE (barg)	17
OUTLET PRESSURE (barg)	54.9
RATED CAPACITY (kg/h)	8935.5

C-2101-D1 A

1ST STAGE SUCTION SNUBBER	
OPERATING PRESSURE (barg)	4.9
OPERATING TEMPERATURE (°C)	36.8
DESIGN PRESSURE (barg)	24.5
DESIGN TEMPERATURE (°C)	180
MATERIAL	C.S.

C-2101-D2 A

1ST STAGE DISCHARGE SNUBBER	
OPERATING PRESSURE (barg)	18
OPERATING TEMPERATURE (°C)	129
DESIGN PRESSURE (barg)	24.5
DESIGN TEMPERATURE (°C)	180
MATERIAL	C.S.

C-2102-D1 A

2ND STAGE SUCTION SNUBBER	
OPERATING PRESSURE (barg)	17.1
OPERATING TEMPERATURE (°C)	59.9
DESIGN PRESSURE (barg)	62
DESIGN TEMPERATURE (°C)	180
MATERIAL	C.S.

C-2102-D2 A

2ND STAGE DISCHARGE SNUBBER	
OPERATING PRESSURE (barg)	54.9
OPERATING TEMPERATURE (°C)	148
DESIGN PRESSURE (barg)	62
DESIGN TEMPERATURE (°C)	180
MATERIAL	C.S.

REV.	DATE	P.O.I.	PREP.	CHK.	APP.	AUT.
V03	JAN.2024	AFC	HAVAYAR Co	M.FAKHARIAN	S.FARAMARZPOUR	
V02	AUG.2023	IFR	HAVAYAR Co	M.FAKHARIAN	A.M.MOHSENI	
V01	MAY.2023	IFR	HAVAYAR Co	M.FAKHARIAN	A.M.MOHSENI	
V00	DEC.2022	IFR	HAVAYAR Co	M.FAKHARIAN	A.M.MOHSENI	

REV.	DESCRIPTION	BY	DATE	BY	DATE
		CHECKED		REV. APPR.	

PROJECT NAME: BINAK OILFIELD DEVELOPMENT SURFACE WORK PACKAGES

PROJECT NO.: ---

EPC CONTRACTOR: HIRGAN ENERGY – DESIGN & INSPECTION COMPANIES

EPC/EPD CONTRACTOR: PETROIRAN DEVELOPMENT COMPANY (PEDCO)

THE ORIGINAL AND ALL COPIES OF THIS DRAWING TOGETHER WITH THE COPYRIGHT THEREIN ARE THE SOLE PROPERTY OF N.I.S.O.C./ FIELDS

BINAK OILFIELD DEVELOPMENT SURFACE WORK PACKAGES

DATE	SCALE	DRAWING BY	CHECKED BY	PROJECT ENG.

NO CONSTRUCTION PERMITTED UNLESS DRAWING APPROVED

APPROVED FOR CONSTRUCTION | BY: | DATE:

DRAWING TITLE: P&I DIAGRAM PROCESS GAS

SCALE	SIZE	DRAWING NO.	SHEET NO.	REV.
N.T.S.C.	A3	BK-GCS-HY-120-PR-PI-0001	1A OF 10	V03

BUDGET REF.	LOCATION	SIZE	CLASS	SERIAL NO.	SHEET	REVISION

File No BK-GCS-HY-120-PR-PI-0001-V03-NEW

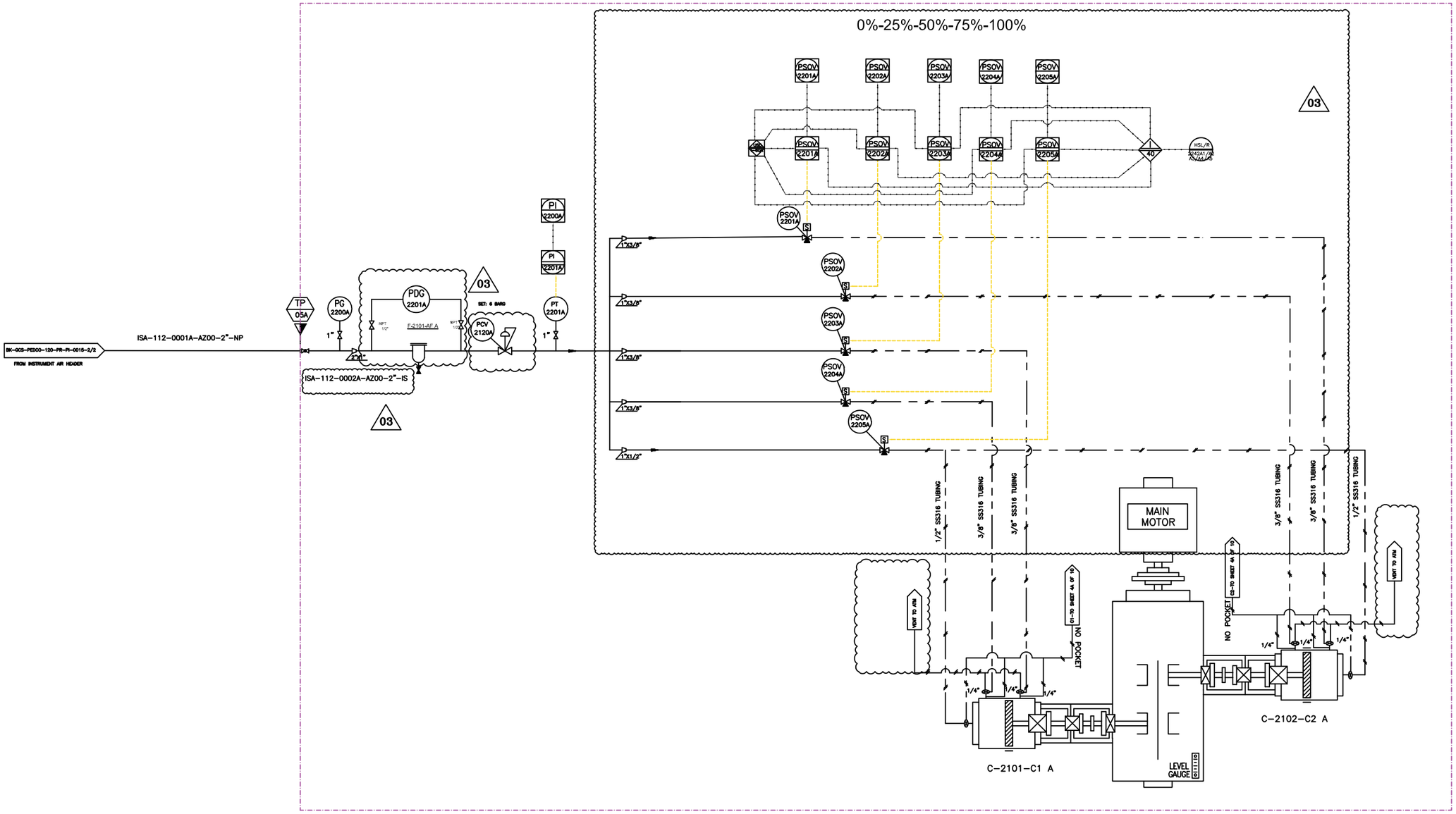

REFERENCE DRAWINGS	DWG. NUMBER
1 –	–

Note :
1. LINE SIZING WILL BE FINALIZED.
2. THE UNLOADERS ARE AIR TO LOAD TYPE.

Legend :

REV.	DATE	P.O.I.	PREP.	CHK.	APP.	AUT.
V03	JAN.2024	AFC	HAVAYAR Co	M.FAKHARIAN	S.FARAMARZPOUR	
V02	AUG.2023	IFR	HAVAYAR Co	M.FAKHARIAN	A.M.MOHSENI	
V01	MAY.2023	IFR	HAVAYAR Co	M.FAKHARIAN	A.M.MOHSENI	
V00	DEC.2022	IFR	HAVAYAR Co	M.FAKHARIAN	A.M.MOHSENI	

REV.	DESCRIPTION	BY	DATE	BY	DATE
		CHECKED		REV. APPR.	

PROJECT NAME: BINAK OILFIELD DEVELOPMENT SURFACE WORK PACKAGES

PROJECT NO.: ---

EPC CONTRACTOR: HIRGAN ENERGY – DESIGN & INSPECTION COMPANIES

EPC/EPD CONTRACTOR: PETROIRAN DEVELOPMENT COMPANY (PEDCO)

THE ORIGINAL AND ALL COPIES OF THIS DRAWING TOGETHER WITH THE COPYRIGHT THEREIN ARE THE SOLE PROPERTY OF N.I.S.O.C./ FIELDS

BINAK OILFIELD DEVELOPMENT SURFACE WORK PACKAGES

DATE	SCALE	DRAWING BY	CHECKED BY	PROJECT ENG.

NO CONSTRUCTION PERMITTED UNLESS DRAWING APPROVED

APPROVED FOR CONSTRUCTION | BY: | DATE:

DRAWING TITLE: P&I DIAGRAM CAPACITY CONTROL

SCALE	SIZE	DRAWING NO.	SHEET NO.	REV.
N.T.S.C.	A3	BK-GCS-HY-120-PR-PI-0001	2A OF 10	V03

BUDGET REF.	LOCATION	SIZE	CLASS	SERIAL NO.	SHEET	REVISION

HAVAYAR

Software: Autocad

File No: BK-GCS-HY-120-PR-PI-0001-V03-NEW

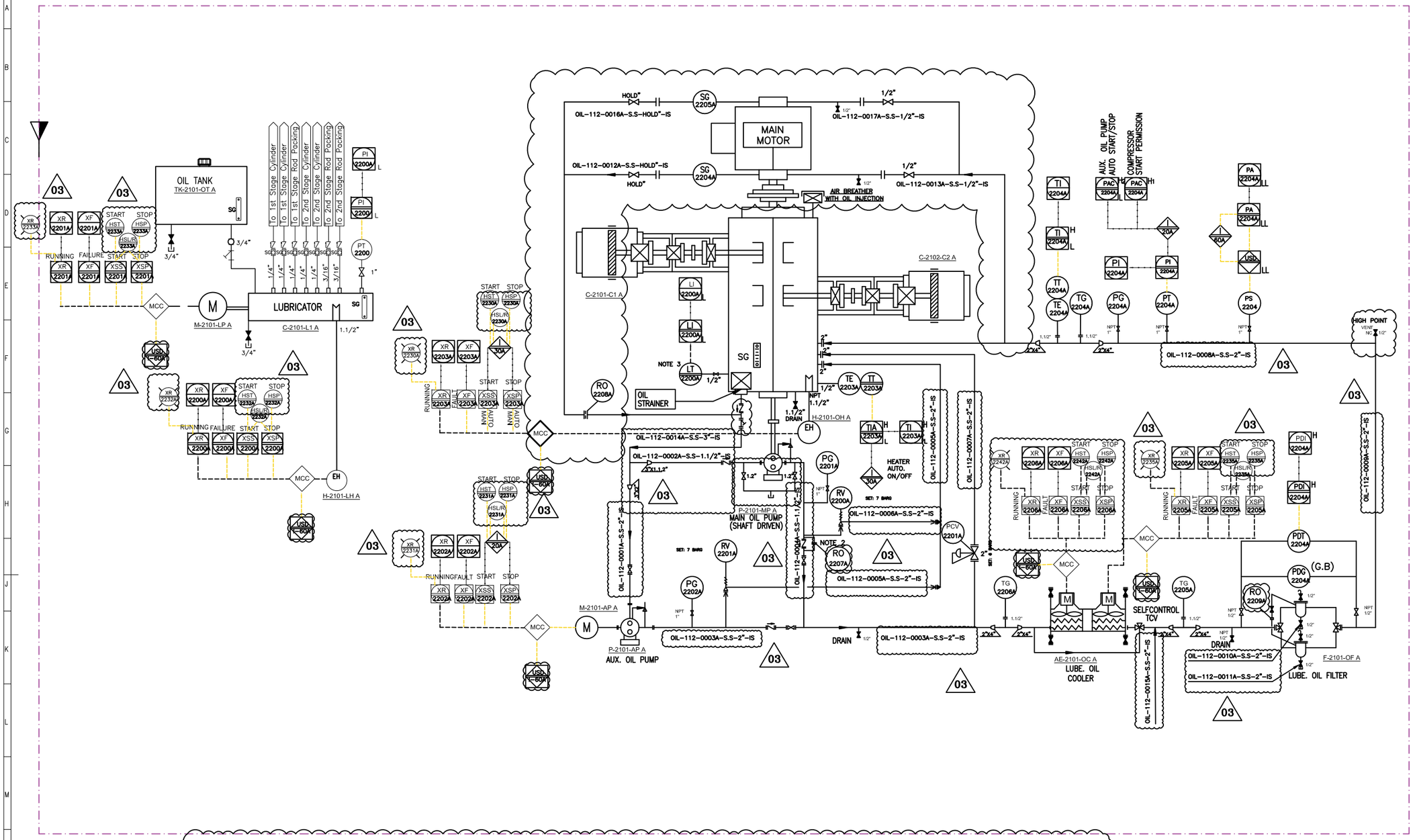

REFERENCE DRAWINGS	DWG. NUMBER
1 -	-

Note :
1. LINE SIZING WILL BE FINALIZED.
2. INSTEAD OF RO, DRILLED CHECK VALVE MAY BE USED.
3. DIFFERENTIAL PRESSURE TYPE.

Legend :

TK-2101-OT A
OIL TANK

OPERATING PRESSURE (barg)	ATM
OPERATING TEMPERATURE (°C)	ATM
DESIGN TEMPERATURE (°C)	85
MATERIAL	S.S.
CAPACITY (LIT)	80

P-2101-MP A
MAIN OIL PUMP

OPERATING PRESSURE (barg)	5
OPERATING TEMPERATURE (°C)	70
DESIGN PRESSURE (barg)	10
RATED POWER	SHAFT DRIVEN
RATED CAPACITY (L/min)	131
MATERIAL	CAST IRON

P-2101-AP A
AUX. OIL PUMP

OPERATING PRESSURE (barg)	HOLD
OPERATING TEMPERATURE (°C)	70
DESIGN PRESSURE (barg)	10
RATED POWER (kW)	7.5
RATED CAPACITY (L/min)	131
MATERIAL	CAST IRON

F-2101-OF A
LUBE OIL FILTER

OPERATING PRESSURE (barg)	5
OPERATING TEMPERATURE (°C)	60
DESIGN PRESSURE (barg)	10
DESIGN TEMPERATURE (°C)	85
MATERIAL	S.S
MESH SIZE (MICRON)	10

AE-2101-OC A
LUBE OIL COOLER

TYPE	AIR COOLER
OPERATING PRESSURE (barg)	5
DESIGN PRESSURE (barg)	10
OPERATING TEMPERATURE (°C)	70/60
DESIGN TEMPERATURE (°C)	85
MATERIAL	S.S

P-2101-MP A
LUBRICATOR PUMP

OPERATING PRESSURE (barg)	5.5 ~ 7
RATED POWER (kW)	0.4

P-2101-MP A
LUBRICATOR HEATER

MATERIAL	S.S.
RATED POWER (kW)	0.4

REV.	DATE	P.O.I.	PREP.	CHK.	APP.	AUT.
V03	JAN.2024	AFC	HAVAYAR Co	M.FAKHARIAN	S.FARAMARZPOUR	
V02	AUG.2023	IFR	HAVAYAR Co	M.FAKHARIAN	A.M.MOHSENI	
V01	MAY.2023	IFR	HAVAYAR Co	M.FAKHARIAN	A.M.MOHSENI	
V00	DEC.2022	IFR	HAVAYAR Co	M.FAKHARIAN	A.M.MOHSENI	

REV.	DESCRIPTION	BY	DATE	BY	DATE
		CHECKED		REV. APPR.	

PROJECT NAME: BINAK OILFIELD DEVELOPMENT SURFACE WORK PACKAGES

PROJECT NO.: ---

THE ORIGINAL AND ALL COPIES OF THIS DRAWING TOGETHER WITH THE COPYRIGHT THEREIN ARE THE SOLE PROPERTY OF N.I.S.O.C./ FIELDS

EPC CONTRACTOR: HIRGAN ENERGY – DESIGN & INSPECTION COMPANIES

EPC/EPD CONTRACTOR: PETROIRAN DEVELOPMENT COMPANY (PEDCO)

BINAK OILFIELD DEVELOPMENT SURFACE WORK PACKAGES

DATE	SCALE	DRAWING BY	CHECKED BY	PROJECT ENG.

HAVAYAR

DRAWING TITLE: P&I DIAGRAM LUBRICATION SYSTEM

NO CONSTRUCTION PERMITTED UNLESS DRAWING APPROVED

APPROVED FOR CONSTRUCTION BY: DATE:

SCALE	SIZE	DRAWING NO.	SHEET NO.	REV.
N.T.SC.	A3	BK-GCS-HY-120-PR-PI-0001	3A OF 10	V03

BUDGET REF.	LOCATION	SIZE	CLASS	SERIAL NO.	SHEET	REVISION

Software Autocad File No BK-GCS-HY-120-PR-PI-0001-V03-NEW

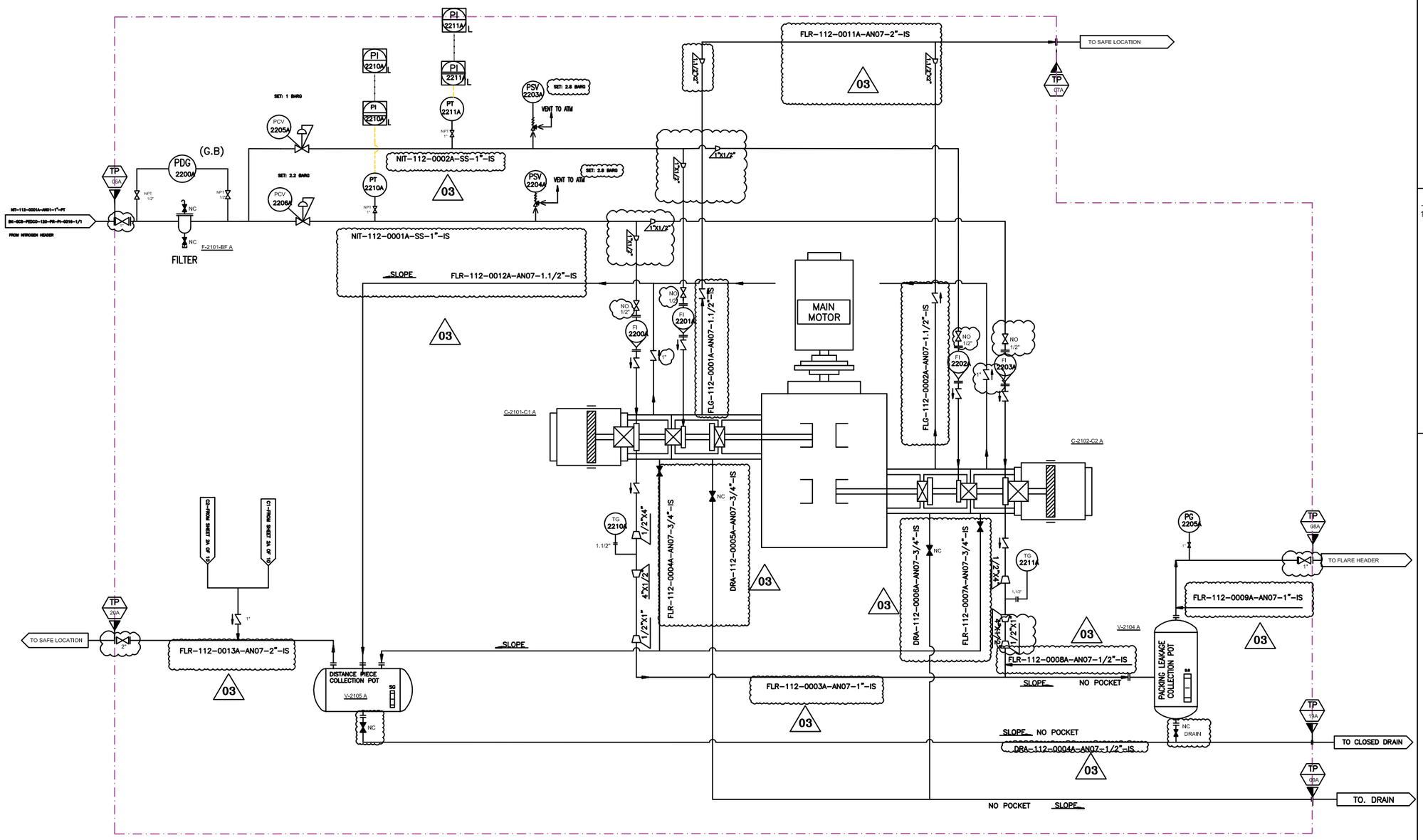

REFERENCE DRAWINGS	DWG. NUMBER
1 -	-

Note :

1. LINE SIZING WILL BE FINALIZED.

Legend :

V-2104 A

PACKING LEAKAGE COLLECTING POT	
DESIGN PRESSURE (barg)	5
DESIGN TEMPERATURE (°C)	85
OPERATING PRESSURE (barg)	1,5
MATERIAL	C.S

F-2101-BF A

BUFFER GAS FILTER	
DESIGN PRESSURE (barg)	10
DESIGN TEMPERATURE (°C)	85
OPERATING PRESSURE (barg)	7,5
MATERIAL	S.S

V-2105 A

DISTANCE PIECE COLLECTING POT	
DESIGN PRESSURE (barg)	5
DESIGN TEMPERATURE (°C)	85
OPERATING PRESSURE (barg)	1,5
MATERIAL	C.S

REV.	DATE	P.O.I.	PREP.	CHK.	APP.	AUT.
V03	JAN.2024	AFC	HAVAYAR Co	M.FAKHARIAN	S.FARAMARZPOUR	
V02	AUG.2023	IFR	HAVAYAR Co	M.FAKHARIAN	A.M.MOHSENI	
V01	MAY.2023	IFR	HAVAYAR Co	M.FAKHARIAN	A.M.MOHSENI	
V00	DEC.2022	IFR	HAVAYAR Co	M.FAKHARIAN	A.M.MOHSENI	

REV.	DESCRIPTION	BY	DATE	BY	DATE
		CHECKED		REV. APPR.	

PROJECT NAME: BINAK OILFIELD DEVELOPMENT SURFACE WORK PACKAGES

PROJECT NO.: ---

EPC CONTRACTOR: HIRGAN ENERGY – DESIGN & INSPECTION COMPANIES

EPC/EPD CONTRACTOR: PEDCO — PETROIRAN DEVELOPMENT COMPANY

HAVAYAR

DRAWING TITLE: P&I DIAGRAM N2 PURGING SYSTEM

SCALE	SIZE	DRAWING NO.	SHEET NO.	REV.
N.T.S.C.	A3	BK-GCS-HY-120-PR-PI-0001	4A OF 11D	V03

این نقشه حقوق مالکیت صنایع نفت ملی ایران می باشد و هرگونه استفاده و تکثیر بدون اجازه کتبی مجاز نمی باشد

THE ORIGINAL AND ALL COPIES OF THIS DRAWING TOGETHER WITH THE COPYRIGHT THEREIN ARE THE SOLE PROPERTY OF N.I.S.O.C./ FIELDS

BINAK OILFIELD DEVELOPMENT SURFACE WORK PACKAGES

DATE	SCALE	DRAWING BY	CHECKED BY	PROJECT ENG.

NO CONSTRUCTION PERMITTED UNLESS DRAWING APPROVED

APPROVED FOR CONSTRUCTION BY: DATE:

BUDGET REF.	LOCATION	SIZE	CLASS	SERIAL NO.	SHEET	REVISION

Software Autocad File No BK-GCS-HY-120-PR-PI-0001-V03-NEW

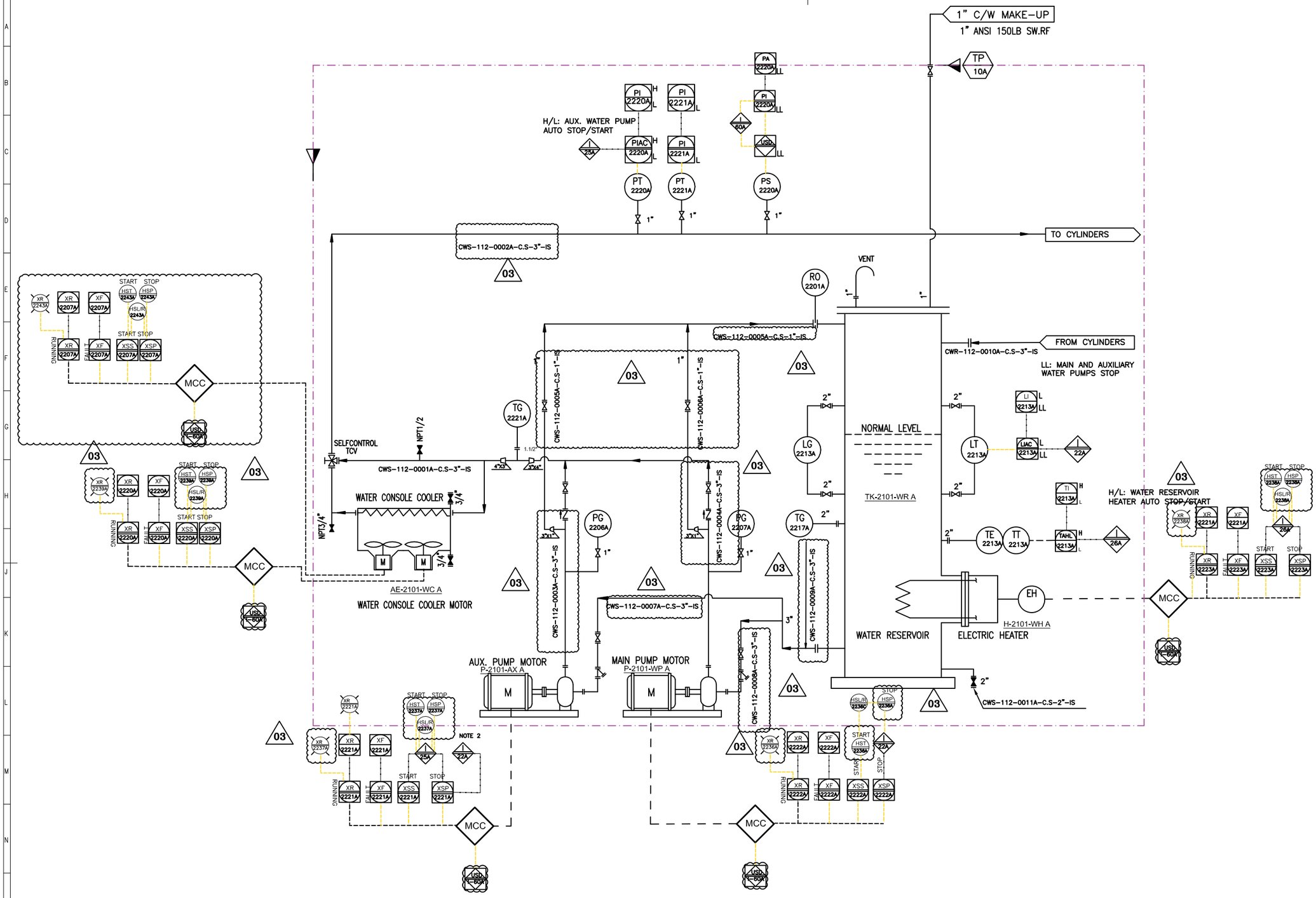

REFERENCE DRAWINGS	DWG. NUMBER
1 -	-

Note :
1. LINE SIZING WILL BE FINALIZED.
2. I-22 INTERLOCK HAS PRIORITY OVER I-25

Legend :

AE-2101-WC A

WATER COOLER

TYPE	AIR COOLER
DESIGN PRESSURE (barg)	8
OPERATING PRESSURE (barg)	3
DESIGN TEMPERATURE (°C)	85
OPERATING TEMPERATURE (°C)	70/63

P-2101-WP A

MAIN WATER PUMP

TYPE	CENTRIFUGAL
RATED POWER (KW)	WILL BE FINALIZED
OPERATING CAPACITY (TON/H)	15,3
RATED HEAD (M)	40

P-2101-AX A

AUX. WATER PUMP

TYPE	CENTRIFUGAL
RATED POWER (KW)	WILL BE FINALIZED
OPERATING CAPACITY (TON/H)	15,3
RATED HEAD (M)	40

H-2101-WH A

WATER HEATER

TYPE	ELECTRICAL
RATED POWER (KW)	WILL BE FINALIZED

TK-2101-WR A

WATER RESERVOIR

OPERATING PRESSURE (barg)	ATM
OPERATING TEMPERATURE (°C)	70
DESIGN TEMPERATURE (°C)	85
MATERIAL	C.S.

REV.	DATE	P.O.I.	PREP.	CHK.	APP.	AUT.
V03	JAN.2024	AFC	HAVAYAR Co	M.FAKHARIAN	S.FARAMARZPOUR	
V02	AUG.2023	IFR	HAVAYAR Co	M.FAKHARIAN	A.M.MOHSENI	
V01	MAY.2023	IFR	HAVAYAR Co	M.FAKHARIAN	A.M.MOHSENI	
V00	DEC.2022	IFR	HAVAYAR Co	M.FAKHARIAN	A.M.MOHSENI	

REV.	DESCRIPTION	BY	DATE	BY	DATE
		CHECKED		REV. APPR.	

PROJECT NAME: BINAK OILFIELD DEVELOPMENT SURFACE WORK PACKAGES

PROJECT NO.: ---

EPC CONTRACTOR: HIRGAN ENERGY – DESIGN & INSPECTION COMPANIES

EPC/EPD CONTRACTOR: PETROIRAN DEVELOPMENT COMPANY — PEDCO

THE ORIGINAL AND ALL COPIES OF THIS DRAWING TOGETHER WITH THE COPYRIGHT THEREIN ARE THE SOLE PROPERTY OF N.I.S.O.C./ FIELDS

BINAK OILFIELD DEVELOPMENT SURFACE WORK PACKAGES

DATE	SCALE	DRAWING BY	CHECKED BY	PROJECT ENG.

NO CONSTRUCTION PERMITTED UNLESS DRAWING APPROVED

APPROVED FOR CONSTRUCTION	BY:	DATE:

DRAWING TITLE: P&I DIAGRAM PLAN D COOLING WATER SYSTEM

SCALE	SIZE	DRAWING NO.	SHEET NO.	REV.
N.T.S.C.	A3	BK-GCS-HY-120-PR-PI-0001	5A OF 10	V03

BUDGET REF.	LOCATION	SIZE	CLASS	SERIAL NO.	SHEET	REVISION

HAVAYAR

File No: BK-GCS-HY-120-PR-PI-0001-V03-NEW

REFERENCE DRAWINGS	DWG. NUMBER
1. P&ID – 1ST STAGE COMPRESSION COMPRESSORS	BK-GCS-PEDCO-120-PR-IS-0007_D02
2. P&ID – 2ND STAGE COMPRESSION COMPRESSORS	BK-GCS-PEDCO-120-PR-PI-0010_D02

Note :
1. LINE SIZING WILL BE FINALIZED.

Legend :

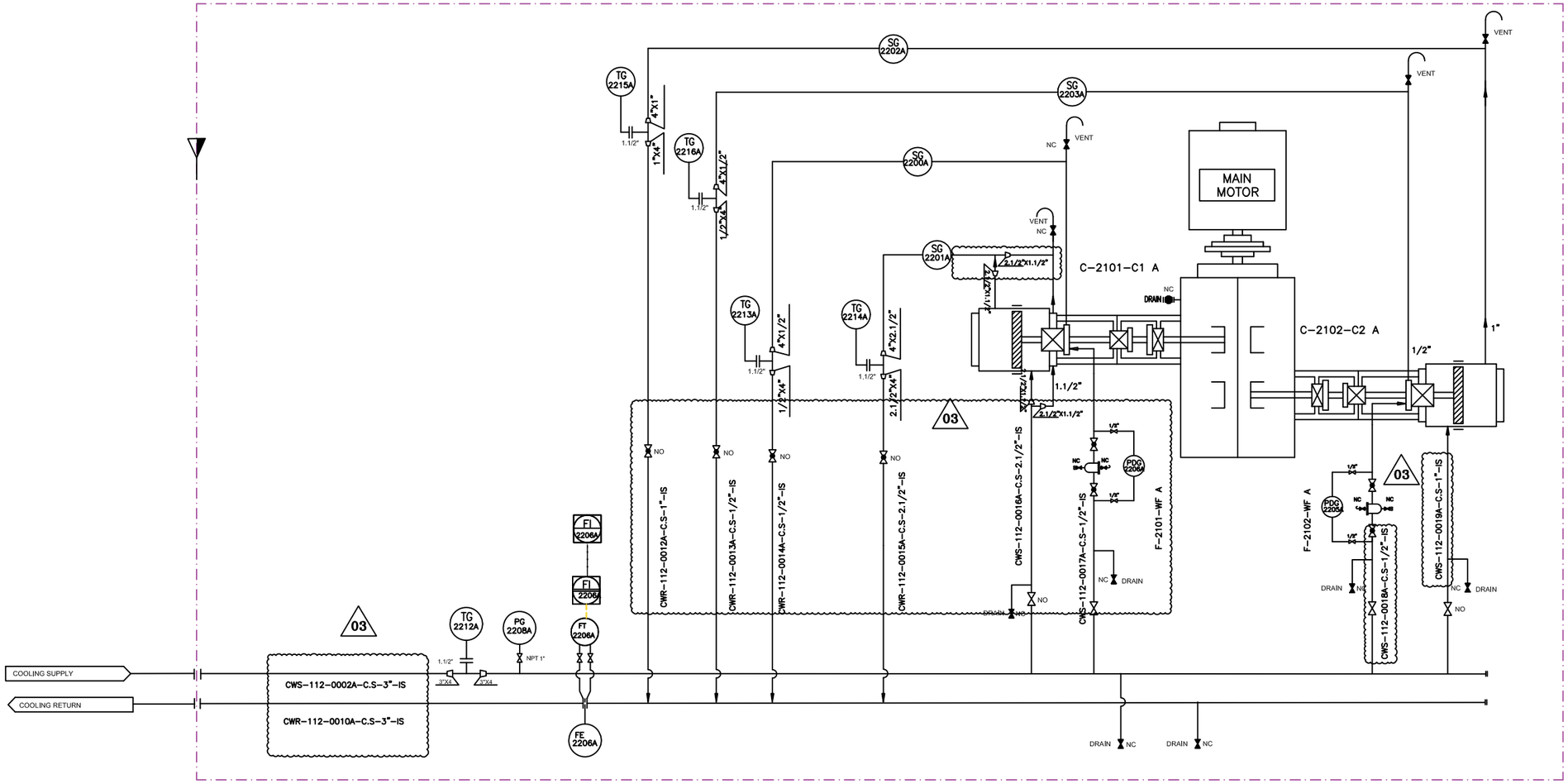

F-2101-WF A

WATER FILTER	
OPERATING PRESSURE (barg)	3
OPERATING TEMPERATURE (°C)	63
DESIGN PRESSURE (barg)	8
DESIGN TEMPERATURE (°C)	85
MESH SIZE (MICRON)	125

F-2102-WF A

WATER FILTER	
OPERATING PRESSURE (barg)	3
OPERATING TEMPERATURE (°C)	63
DESIGN PRESSURE (barg)	8
DESIGN TEMPERATURE (°C)	85
MESH SIZE (MICRON)	125

REV.	DATE	P.O.I.	PREP.	CHK.	APP.	AUT.
V03	JAN.2024	AFC	HAVAYAR Co	M.FAKHARIAN	S.FARAMARZIPOUR	
V02	AUG.2023	IFR	HAVAYAR Co	M.FAKHARIAN	A.M.MOHSENI	
V01	MAY.2023	IFR	HAVAYAR Co	M.FAKHARIAN	A.M.MOHSENI	
V00	DEC.2022	IFR	HAVAYAR Co	M.FAKHARIAN	A.M.MOHSENI	

REV.	DESCRIPTION	BY	DATE	BY	DATE
		CHECKED		REV. APPR.	

PROJECT NAME: BINAK OILFIELD DEVELOPMENT SURFACE WORK PACKAGES

PROJECT NO.: ---

EPC CONTRACTOR: HIRGAN ENERGY – DESIGN & INSPECTION COMPANIES

EPC/EPD CONTRACTOR: PETROIRAN DEVELOPMENT COMPANY (PEDCO)

THE ORIGINAL AND ALL COPIES OF THIS DRAWING TOGETHER WITH THE COPYRIGHT THEREIN ARE THE SOLE PROPERTY OF N.I.S.O.C./ FIELDS

BINAK OILFIELD DEVELOPMENT SURFACE WORK PACKAGES

DATE	SCALE	DRAWING BY	CHECKED BY	PROJECT ENG.

NO CONSTRUCTION PERMITTED UNLESS DRAWING APPROVED

APPROVED FOR CONSTRUCTION | BY: | DATE:

DRAWING TITLE: P&I DIAGRAM COOLING WATER SYSTEM

SCALE	SIZE	DRAWING NO.	SHEET NO.	REV.
N.T.S.C.	A3	BK-GCS-HY-120-PR-PI-0001	6A OF 10	V03

BUDGET REF.	LOCATION	SIZE	CLASS	SERIAL NO.	SHEET	REVISION

File No: BK-GCS-HY-120-PR-PI-0001-V03-NEW

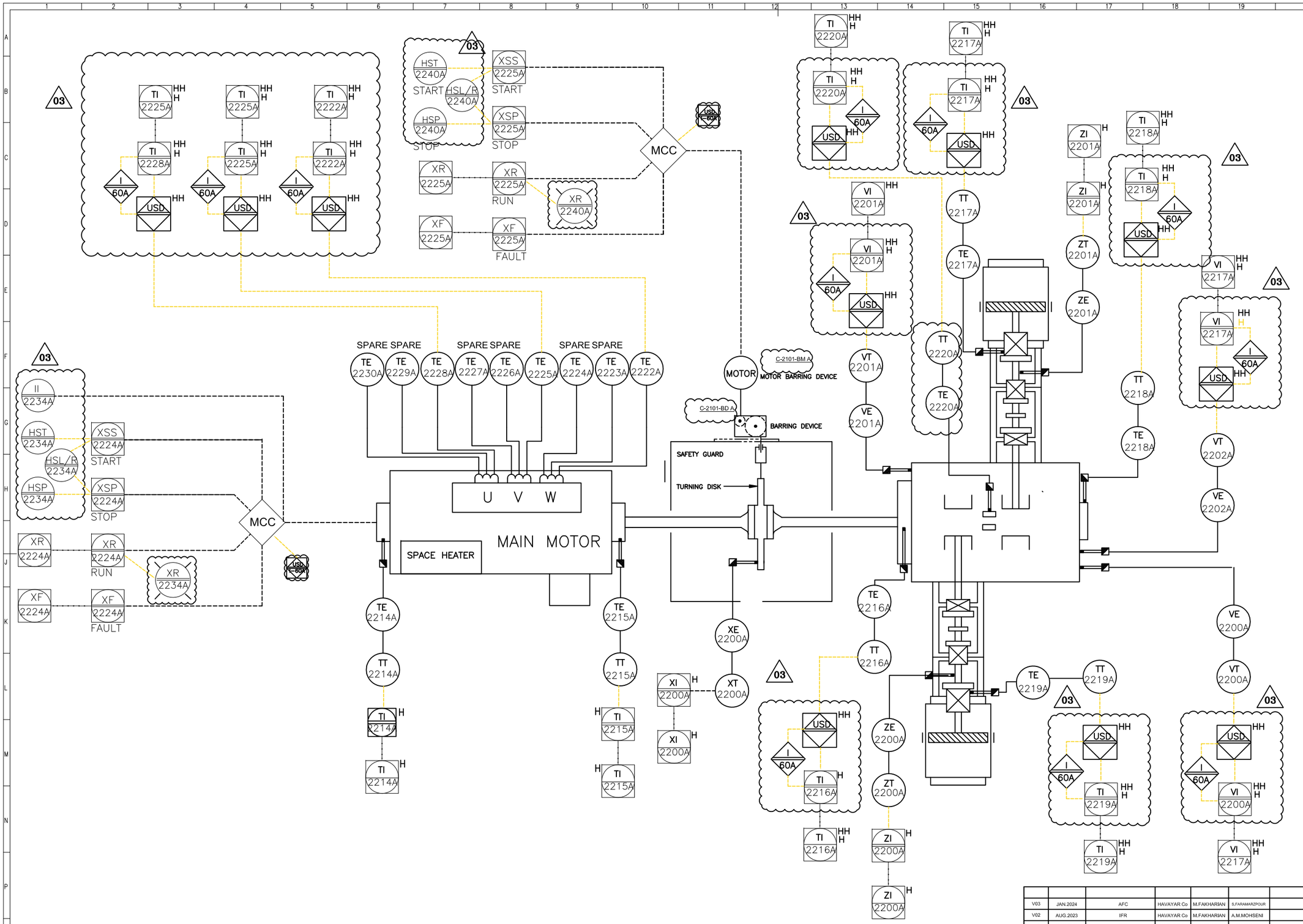

REFERENCE DRAWINGS	DWG. NUMBER
	–

Legend :

REV.	DATE	P.O.I.	PREP.	CHK.	APP.	AUT.
V03	JAN.2024	AFC	HAVAYAR Co	M.FAKHARIAN	S.FARAMARZPOUR	
V02	AUG.2023	IFR	HAVAYAR Co	M.FAKHARIAN	A.M.MOHSENI	
V01	MAY.2023	IFR	HAVAYAR Co	M.FAKHARIAN	A.M.MOHSENI	
V00	DEC.2022	IFR	HAVAYAR Co	M.FAKHARIAN	A.M.MOHSENI	

REV.	DESCRIPTION	BY	DATE	BY	DATE
		CHECKED		REV. APPR.	

PROJECT NAME: BINAK OILFIELD DEVELOPMENT SURFACE WORK PACKAGES

PROJECT NO.: ---

EPC CONTRACTOR: HIRGAN ENERGY – DESIGN & INSPECTION COMPANIES

EPC/EPD CONTRACTOR: PETROIRAN DEVELOPMENT COMPANY (PEDCO)

THE ORIGINAL AND ALL COPIES OF THIS DRAWING TOGETHER WITH THE COPYRIGHT THEREIN ARE THE SOLE PROPERTY OF N.I.S.O.C./ FIELDS

BINAK OILFIELD DEVELOPMENT SURFACE WORK PACKAGES

DATE	SCALE	DRAWING BY	CHECKED BY	PROJECT ENG.

NO CONSTRUCTION PERMITTED UNLESS DRAWING APPROVED

APPROVED FOR CONSTRUCTION BY: DATE:

HAVAYAR

DRAWING TITLE: P&I DIAGRAM MACHINE MONITORING SYSTEM

SCALE	SIZE	DRAWING NO.	SHEET NO.	REV.
N.T.SC.	A3	BK-GCS-HY-120-PR-PI-0001	7A OF 10	V03

BUDGET REF.	LOCATION	SIZE	CLASS	SERIAL NO.	SHEET	REVISION

File No: BK-GCS-HY-120-PR-PI-0001-V03-NEW

03

LCP-2101A

Tag	Description
XR 2230A	OIL HEATER RUNNING
XR 2231A	AUX OIL PUMP MOTOR RUNNING
XR 2232A	LUBRICATOR HEATER RUNNING
XR 2233A	LUBRICATOR MOTOR RUNNING
XR 2234A	MAIN MOTOR RUNNING
XR 2235A	OIL COOLER MOTOR A RUNNING
XR 2236A	MAIN WATER PUMP MOTOR RUNNING
XR 2237A	AUX WATER PUMP MOTOR RUNNING
XR 2238A	WATER HEATER RUNNING
XR 2239A	WATER COOLER A RUNNING
XR 2240A	BARRING MOTOR RUNNING
XR 2242A	OIL COOLER MOTOR B RUNNING
XR 2243A	WATER COOLER B RUNNING
HST 2230A	OIL HEATER ON
HST 2231A	AUX OIL PUMP MOTOR START
HST 2232A	LUBRICATOR HEATER ON
HST 2233A	LUBRICATOR MOTOR START
HST 2234A	MAIN MOTOR START
HST 2235A	OIL COOLER MOTOR A START
HST 2236A	MAIN WATER PUMP MOTOR START
HST 2237A	AUX WATER PUMP MOTOR START
HST 2238A	WATER HEATER ON
HST 2239A	WATER COOLER A START
HST 2240A	BARRING MOTOR START
HST 2242A	OIL COOLER MOTOR B START
HST 2243A	WATER COOLER B START
HSP 2230A	OIL HEATER OFF
HSP 2231A	AUX OIL PUMP MOTOR STOP
HSP 2232A	LUBRICATOR HEATER OFF
HSP 2233A	LUBRICATOR MOTOR STOP
HSP 2234A	MAIN MOTOR STOP
HSP 2235A	OIL COOLER MOTOR A STOP
HSP 2236A	MAIN WATER PUMP MOTOR STOP
HSP 2237A	AUX WATER PUMP MOTOR STOP
HSP 2238A	WATER HEATER OFF
HSP 2239A	WATER COOLER A STOP
HSP 2240A	BARRING MOTOR STOP
HSP 2242A	OIL COOLER MOTOR B STOP
HSP 2243A	WATER COOLER B STOP
HSL/R 2230A	OIL HEATER L-O-R
HSL/R 2231A	AUX OIL PUMP L-O-R
HSL/R 2232A	LUBRICATOR HEATER L-O-R
HSL/R 2233A	LUBRICATOR MOTOR L-O-R
HSL/R 2234A	MAIN MOTOR L-O-R
HSL/R 2235A	OIL COOLER MOTOR A L-O-R
HSL/R 2236A	MAIN WATER PUMP L-O-R
HSL/R 2237A	AUX WATER PUMP L-O-R
HSL/R 2238A	WATER HEATER L-O-R
HSL/R 2239A	WATER COOLER A L-O-R
HSL/R 2240A	BARRING MOTOR L-O-R
HSL/R 2242A	OIL COOLER MOTOR B L-O-R
HSL/R 2243A	WATER COOLER B L-O-R
HSL/R 2241A	COMP LOCAL/REMOTE
XSP 2230A	COMP START PERMISSION
HSR 2242A	RESET
HST 2241A	LAMP TEST
XF 2230A	COMMON ALARM
ESDL 2230A	COMMON SHUT DOWN
ESD 2230A	EMERGENCY SHUT DOWN
HSL/R 2242A1/A2 A3/A4/A5	LOCAL MANU LOAD 0%-25%-50%-75%-100% SW
II 2234A	MAIN MOTOR AMMETER

REFERENCE DRAWINGS	DWG. NUMBER
1 -	-

Note :

Signals of LCP will be connected to UCP.

03

Legend :

REV.	DATE	P.O.I.	PREP.	CHK.	APP.	AUT.
V03	JAN.2024	AFC	HAVAYAR Co	M.FAKHARIAN	S.FARAMARZPOUR	
V02	AUG.2023	IFR	HAVAYAR Co	M.FAKHARIAN	A.M.MOHSENI	
V01	MAY.2023	IFR	HAVAYAR Co	M.FAKHARIAN	A.M.MOHSENI	
V00	DEC.2022	IFR	HAVAYAR Co	M.FAKHARIAN	A.M.MOHSENI	

REV.	DESCRIPTION	BY	DATE	BY	DATE
		CHECKED		REV. APPR.	

PROJECT NAME: BINAK OILFIELD DEVELOPMENT SURFACE WORK PACKAGES

PROJECT NO.: ---

EPC CONTRACTOR: HIRGAN ENERGY – DESIGN & INSPECTION COMPANIES

EPC/EPD CONTRACTOR: PETROIRAN DEVELOPMENT COMPANY (PEDCO)

THE ORIGINAL AND ALL COPIES OF THIS DRAWING TOGETHER WITH THE COPYRIGHT THEREIN ARE THE SOLE PROPERTY OF N.I.S.O.C./ FIELDS

BINAK OILFIELD DEVELOPMENT SURFACE WORK PACKAGES

DATE	SCALE	DRAWING BY	CHECKED BY	PROJECT ENG.

NO CONSTRUCTION PERMITTED UNLESS DRAWING APPROVED

APPROVED FOR CONSTRUCTION	BY:	DATE:

DRAWING TITLE: P&I DIAGRAM LOCAL CONTROL STATION

SCALE	SIZE	DRAWING NO.	SHEET NO.	REV.
N.T.SC.	A3	BK-GCS-HY-120-PR-PI-0001	8A OF 10	V03

BUDGET REF.	LOCATION	SIZE	CLASS	SERIAL NO.	SHEET	REVISION

HAVAYAR

File No: BK-GCS-HY-120-PR-PI-0001-V03-NEW

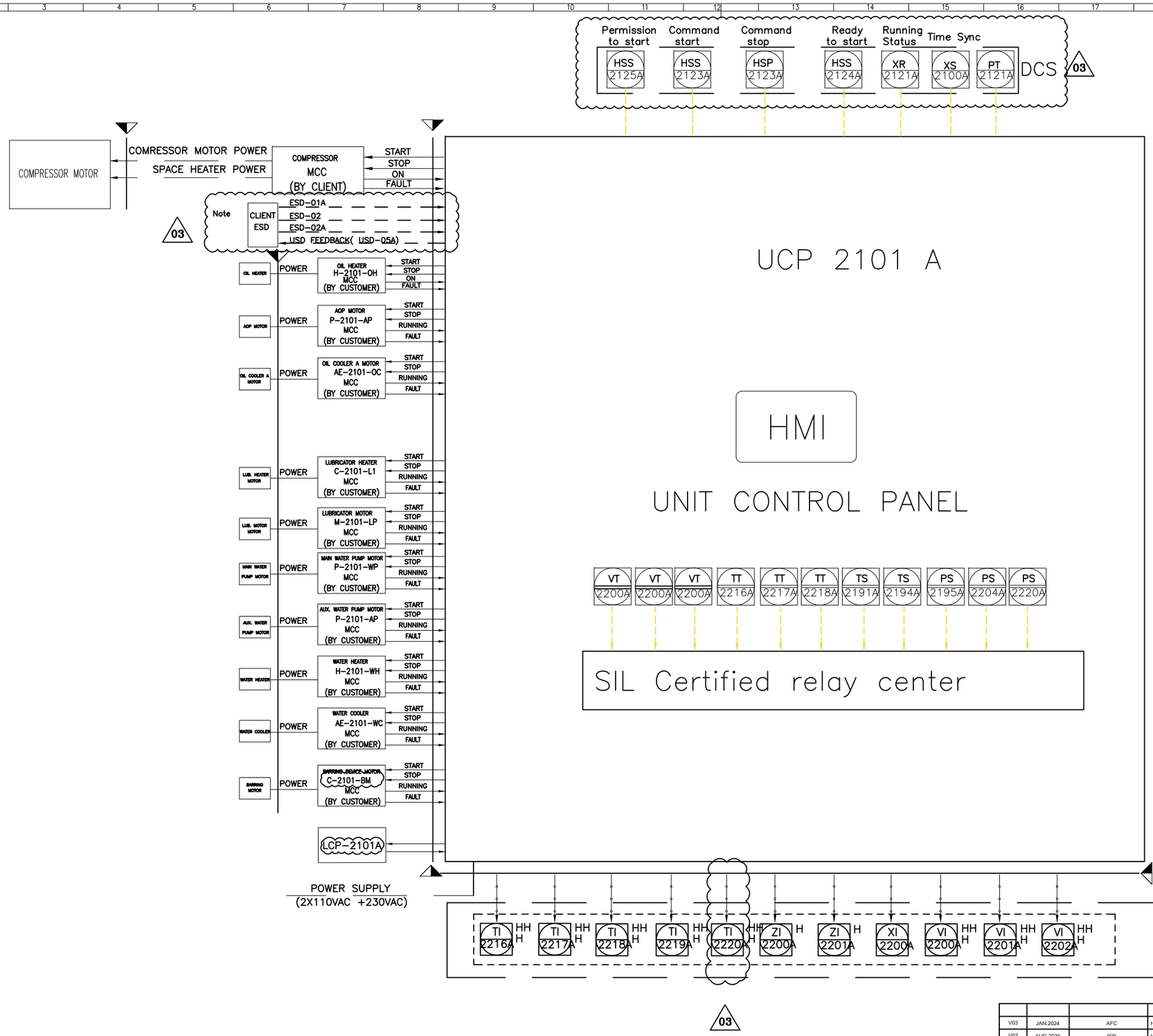

REFERENCE DRAWINGS	DWG. NUMBER
1	-

Note :

Action of ESD-01A/ESD-02A/ESD-02 will be had same action & effect in UCP of package.

For machinery sensor with cause trip, on barrier has been considered. The barrier has two out puts 4-20mA for connecting to PLC & switch for connection to trip relay center.

Legend :

REV.	DATE	P.O.I.	PREP.	CHK.	APP.	AUT.
V03	JAN.2024	AFC	HAVAYAR Co	M.FAKHARIAN	S.FARAMARZPOUR	
V02	AUG.2023	IFR	HAVAYAR Co	M.FAKHARIAN	A.M.MOHSENI	
V01	MAY.2023	IFR	HAVAYAR Co	M.FAKHARIAN	A.M.MOHSENI	
V00	DEC.2022	IFR	HAVAYAR Co	M.FAKHARIAN	A.M.MOHSENI	

REV.	DESCRIPTION	BY	DATE	BY	DATE
		CHECKED		REV. APPR.	

PROJECT NAME: BINAK OILFIELD DEVELOPMENT SURFACE WORK PACKAGES

PROJECT NO.: ---

EPC CONTRACTOR: HIRGAN ENERGY – DESIGN & INSPECTION COMPANIES

EPC/EPD CONTRACTOR: PEDCO — PETROIRAN DEVELOPMENT COMPANY

THE ORIGINAL AND ALL COPIES OF THIS DRAWING TOGETHER WITH THE COPYRIGHT THEREIN ARE THE SOLE PROPERTY OF N.I.S.O.C./ FIELDS

BINAK OILFIELD DEVELOPMENT SURFACE WORK PACKAGES

DATE	SCALE	DRAWING BY	CHECKED BY	PROJECT ENG.

HAVAYAR

DRAWING TITLE: P&I DIAGRAM UNIT CONTROL PANEL

SCALE	SIZE	DRAWING NO.	SHEET NO.	REV.
N.T.S.C.	A3	BK-GCS-HY-120-PR-PI-0001	9A OF 10	V03

NO CONSTRUCTION PERMITTED UNLESS DRAWING APPROVED

APPROVED FOR CONSTRUCTION	BY:	DATE:

BUDGET REF.	LOCATION	SIZE	CLASS	SERIAL NO.	SHEET	REVISION

Software Autocad File No BK-GCS-HY-120-PR-PI-0001-V03-NEW

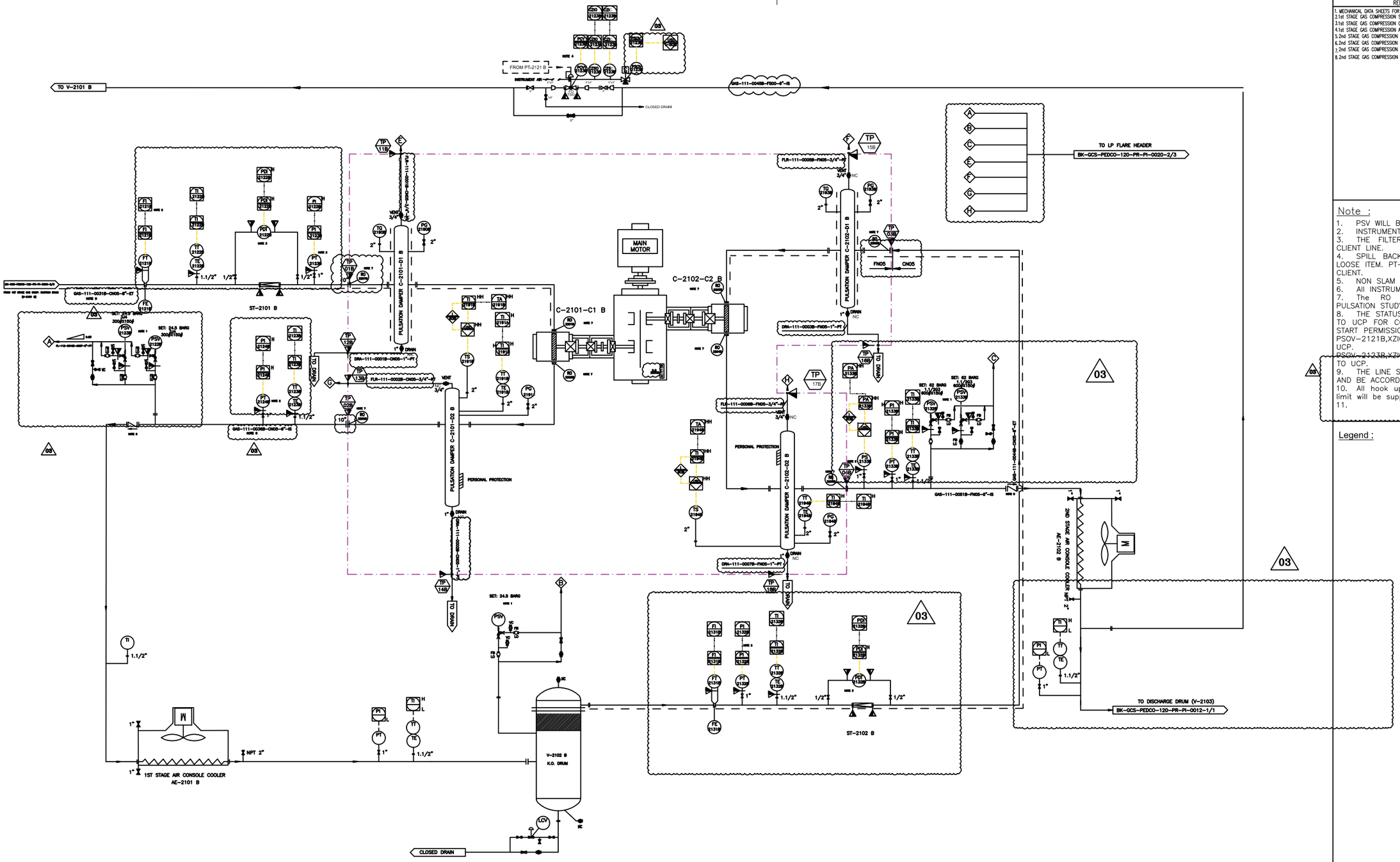

REFERENCE DRAWINGS	DWG. NUMBER
1. MECHANICAL DATA SHEETS FOR GAS COMPRESSORS PACKAGES	BK-GCS-PEDCO-120-ME-DT-0031_D06
2.1st STAGE GAS COMPRESSION SUCTION DRUMS	BK-GCS-PEDCO-120-PR-PI-0006_D06
3.1st STAGE GAS COMPRESSION COMPRESSORS	BK-GCS-PEDCO-120-PR-PI-0007_D06
4.1st STAGE GAS COMPRESSION AIR COOLERS	BK-GCS-PEDCO-120-PR-PI-0008_D06
5.2nd STAGE GAS COMPRESSION SUCTION DRUMS	BK-GCS-PEDCO-120-PR-PI-0009_D06
6.2nd STAGE GAS COMPRESSION COMPRESSORS	BK-GCS-PEDCO-120-PR-PI-0010_D06
7.2nd STAGE GAS COMPRESSION AIR COOLERS	BK-GCS-PEDCO-120-PR-PI-0011_D06
8.2nd STAGE GAS COMPRESSION DISCHARGE DRUM	BK-GCS-PEDCO-120-PR-PI-0012_D06

Note :

1. PSV WILL BE SIZED LATER. THE SUPPLY IS LOOSE.
2. INSTRUMENTS WILL BE SUPPLIED LOOSE ON CLIENT LINE.
3. THE FILTER AND PDT WILL BE SUPPLIED LOOSE ON CLIENT LINE.
4. SPILL BACK VALVE WILL BE SUPPLIED BY VENDOR AS LOOSE ITEM. PT-2121A WILL BE SENT FROM DCS TO UCP BY CLIENT.
5. NON SLAM TYPE CHECK VALVE.
6. All INSTRUMENTS TAG NUMBER ARE START WITH PREFIX C
7. The RO REQUIREMENT WILL BE FINALIZED AFTER PULSATION STUDY.
8. THE STATUS OF XV-2121 B AND XV-2133 B ARE SENT TO UCP FOR COMPRESSOR START PERMISSION. COMPRESSOR START PERMISSION IS GIVEN WHILE THESE VALVES ARE OPEN. PSOV-2121B,XZIC-2121B,XZIO,2121B WILL BE CONNECTED TO UCP.
~~PSOV-2123B,XZIC-2123B,XZIO,2123B WILL BE CONNECTED~~ TO UCP.
9. THE LINE SHALL BE EXPANDED TO THE B.L. FLANGE SIZE AND BE ACCORDING TO THE B.L. PIPING CLASS.
10. All hook up material for instrument of Havayar battery limit will be supplied by Havayar.
11.

Legend :

C-2101-C1 B	
1ST STAGE COMPRESSOR CYLINDER	
INLET PRESSURE (barg)	4.8
OUTLET PRESSURE (barg)	18
RATED CAPACITY (kg/h)	8935.5

C-2102-C2 B	
2ND STAGE COMPRESSOR CYLINDER	
INLET PRESSURE (barg)	17
OUTLET PRESSURE (barg)	54.9
RATED CAPACITY (kg/h)	8935.5

C-2101-D1 B	
1ST STAGE SUCTION SNUBBER	
OPERATING PRESSURE (barg)	4.9
OPERATING TEMPERATURE (°C)	36.8
DESIGN PRESSURE (barg)	24.5
DESIGN TEMPERATURE (°C)	180
MATERIAL	C.S.

C-2101-D2 B	
1ST STAGE DISCHARGE SNUBBER	
OPERATING PRESSURE (barg)	18
OPERATING TEMPERATURE (°C)	129
DESIGN PRESSURE (barg)	24.5
DESIGN TEMPERATURE (°C)	180
MATERIAL	C.S.

C-2102-D1 B	
2ND STAGE SUCTION SNUBBER	
OPERATING PRESSURE (barg)	17.1
OPERATING TEMPERATURE (°C)	59.9
DESIGN PRESSURE (barg)	62
DESIGN TEMPERATURE (°C)	180
MATERIAL	C.S.

C-2102-D2 B	
2ND STAGE DISCHARGE SNUBBER	
OPERATING PRESSURE (barg)	54.9
OPERATING TEMPERATURE (°C)	148
DESIGN PRESSURE (barg)	62
DESIGN TEMPERATURE (°C)	180
MATERIAL	C.S.

REV.	DATE	P.O.I.	PREP.	CHK.	APP.	AUT.
V03	JAN.2024	AFC	HAVAYAR Co	M.FAKHARIAN	S.FARAMARZPOUR	
V02	AUG.2023	IFR	HAVAYAR Co	M.FAKHARIAN	A.M.MOHSENI	
V01	MAY.2023	IFR	HAVAYAR Co	M.FAKHARIAN	A.M.MOHSENI	
V00	DEC.2022	IFR	HAVAYAR Co	M.FAKHARIAN	A.M.MOHSENI	

REV.	DESCRIPTION	BY	DATE	BY	DATE
		CHECKED		REV. APPR.	

PROJECT NAME: BINAK OILFIELD DEVELOPMENT SURFACE WORK PACKAGES

PROJECT NO.: ---

EPC CONTRACTOR: HIRGAN ENERGY – DESIGN & INSPECTION COMPANIES

EPC/EPD CONTRACTOR: PETROIRAN DEVELOPMENT COMPANY (PEDCO)

THE ORIGINAL AND ALL COPIES OF THIS DRAWING TOGETHER WITH THE COPYRIGHT THEREIN ARE THE SOLE PROPERTY OF N.I.S.O.C./ FIELDS

BINAK OILFIELD DEVELOPMENT SURFACE WORK PACKAGES

DATE	SCALE	DRAWING BY	CHECKED BY	PROJECT ENG.

NO CONSTRUCTION PERMITTED UNLESS DRAWING APPROVED

APPROVED FOR CONSTRUCTION | BY: | DATE:

DRAWING TITLE: P&I DIAGRAM PROCESS GAS

SCALE	SIZE	DRAWING NO.	SHEET NO.	REV.
N.T.S.C.	A3	BK-GCS-HY-120-PR-PI-0001	1B OF 10	V03

BUDGET REF.	LOCATION	SIZE	CLASS	SERIAL NO.	SHEET	REVISION

File No: BK-GCS-HY-120-PR-PI-0001-V03-M

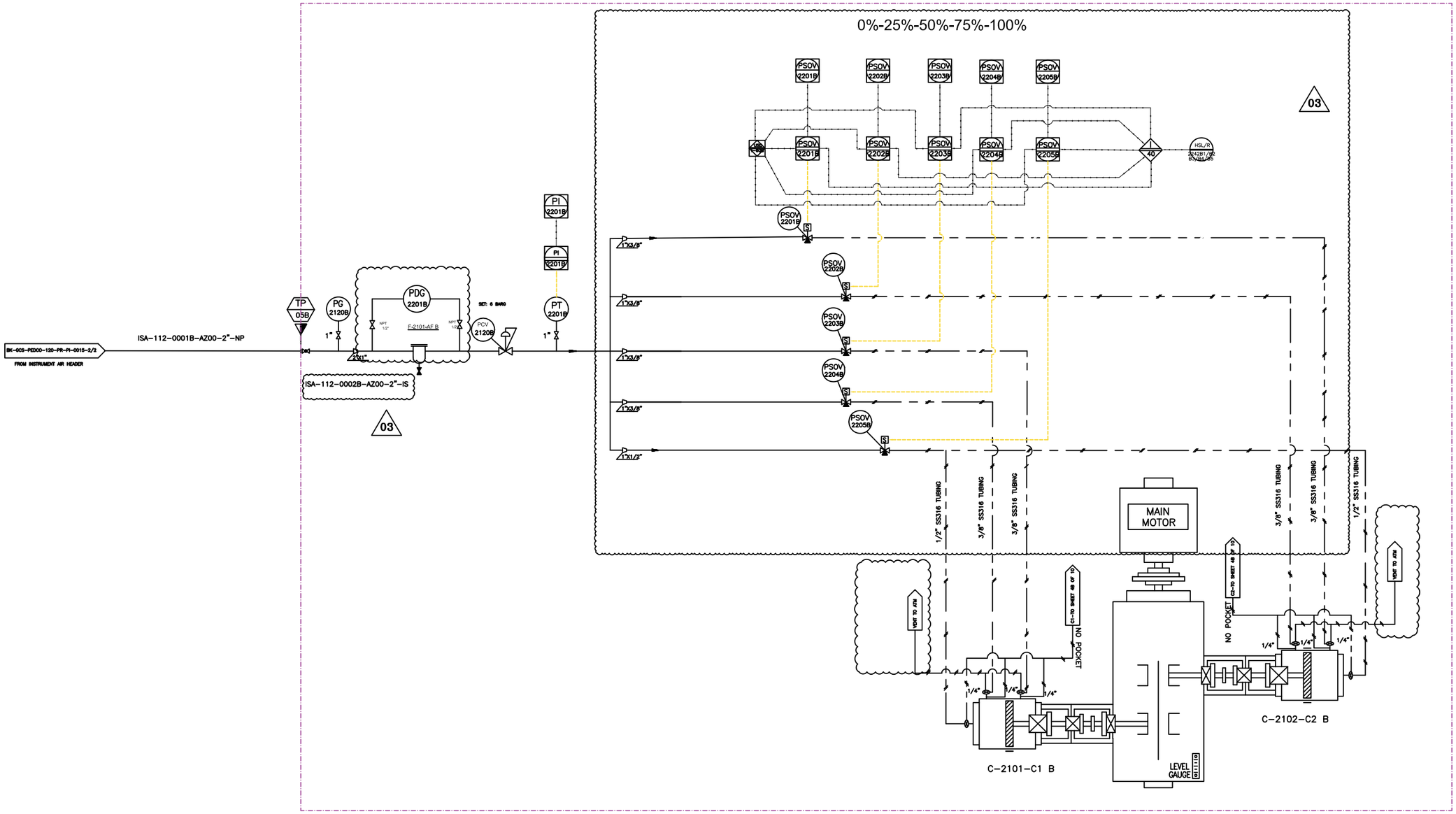

Note :

1. LINE SIZING WILL BE FINALIZED.
2. THE UNLOADERS ARE AIR TO LOAD TYPE.

Legend :

REFERENCE DRAWINGS	DWG. NUMBER
1 -	-

REV.	DATE	P.O.I.	PREP.	CHK.	APP.	AUT.
V03	JAN.2024	AFC	HAVAYAR Co	M.FAKHARIAN	S.FARAMARZPOUR	
V02	AUG.2023	IFR	HAVAYAR Co	M.FAKHARIAN	A.M.MOHSENI	
V01	MAY.2023	IFR	HAVAYAR Co	M.FAKHARIAN	A.M.MOHSENI	
V00	DEC.2022	IFR	HAVAYAR Co	M.FAKHARIAN	A.M.MOHSENI	

REV.	DESCRIPTION	BY	DATE	BY	DATE
		CHECKED		REV. APPR.	

PROJECT NAME: BINAK OILFIELD DEVELOPMENT SURFACE WORK PACKAGES

PROJECT NO.: ---

EPC CONTRACTOR: HIRGAN ENERGY – DESIGN & INSPECTION COMPANIES

EPC/EPD CONTRACTOR: PETROIRAN DEVELOPMENT COMPANY — PEDCO

این نقشه و کلیه حقوق مالکیت معنوی آن متعلق به شرکت ملی نفت ایران می‌باشد
THE ORIGINAL AND ALL COPIES OF THIS DRAWING TOGETHER WITH THE COPYRIGHT THEREIN ARE THE SOLE PROPERTY OF N.I.S.O.C./ FIELDS

BINAK OILFIELD DEVELOPMENT SURFACE WORK PACKAGES

DATE	SCALE	DRAWING BY	CHECKED BY	PROJECT ENG.

NO CONSTRUCTION PERMITTED UNLESS DRAWING APPROVED

APPROVED FOR CONSTRUCTION | BY: | DATE:

DRAWING TITLE: P&I DIAGRAM CAPACITY CONTROL

SCALE	SIZE	DRAWING NO.	SHEET NO.	REV.
N.T.SC.	A3	BK-GCS-HY-120-PR-PI-0001	2B OF 10	V03

BUDGET REF.	LOCATION	SIZE	CLASS	SERIAL NO.	SHEET	REVISION

HAVAYAR

Software Autocad File No BK-GCS-HY-120-PR-PI-0001-V03-NEW

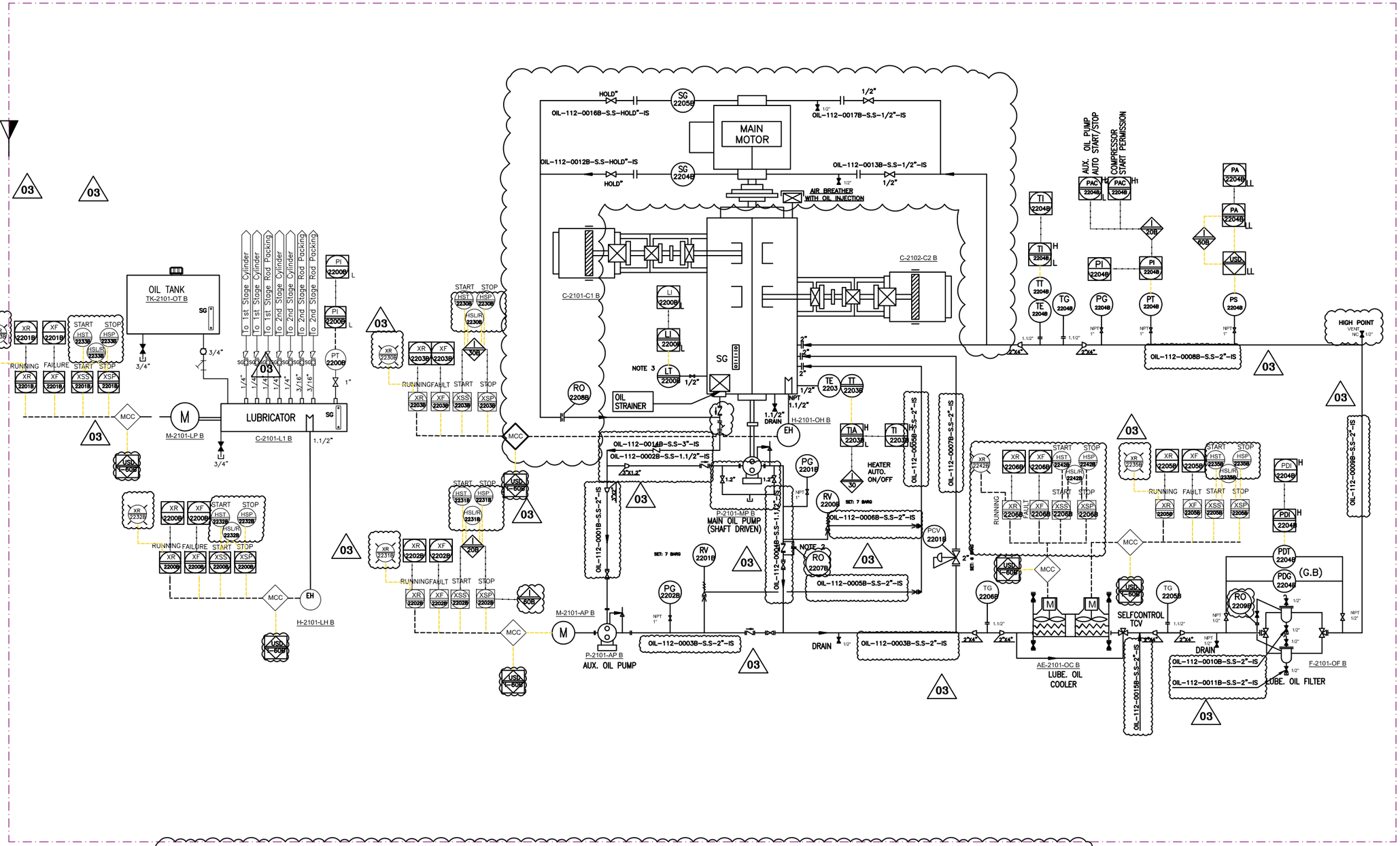

TK-2101-OT B	
OIL TANK	
OPERATING PRESSURE (barg)	ATM
OPERATING TEMPERATURE (°C)	ATM
DESIGN TEMPERATURE (°C)	85
MATERIAL	S.S.
CAPACITY (LIT)	80

P-2101-MP B	
MAIN OIL PUMP	
OPERATING PRESSURE (barg)	5
OPERATING TEMPERATURE (°C)	70
DESIGN PRESSURE (barg)	10
RATED POWER	SHAFT DRIVEN
RATED CAPACITY (L/min)	131
MATERIAL	CAST IRON

P-2101-AP B	
AUX. OIL PUMP	
OPERATING PRESSURE (barg)	HOLD
OPERATING TEMPERATURE (°C)	70
DESIGN PRESSURE (barg)	10
RATED POWER (kW)	7.5
RATED CAPACITY (L/min)	131
MATERIAL	CAST IRON

F-2101-OF B	
LUBE OIL FILTER	
OPERATING PRESSURE (barg)	5
OPERATING TEMPERATURE (°C)	60
DESIGN PRESSURE (barg)	10
DESIGN TEMPERATURE (°C)	85
MATERIAL	S.S
MESH SIZE (MICRON)	10

AE-2101-OC B	
LUBE OIL COOLER	
TYPE	AIR COOLER
OPERATING PRESSURE (barg)	5
DESIGN PRESSURE (barg)	10
OPERATING TEMPERATURE (°C)	70/60
DESIGN TEMPERATURE (°C)	85
MATERIAL	S.S

P-2101-MP B	
LUBRICATOR PUMP	
OPERATING PRESSURE (barg)	5.5 ~ 7
RATED POWER (kW)	0.4

P-2101-MP B	
LUBRICATOR HEATER	
MATERIAL	S.S.
RATED POWER (kW)	0.4

REFERENCE DRAWINGS	DWG. NUMBER
1 -	-

Note :
1. LINE SIZING WILL BE FINALIZED.
2. INSTEAD OF RO, DRILLED CHECK VALVE MAY BE USED.
3. DIFFERENTIAL PRESSURE TYPE.

Legend :

REV.	DATE	P.O.I.	PREP.	CHK.	APP.	AUT.
V03	JAN.2024	AFC	HAVAYAR Co	M.FAKHARIAN	S.FARAMARZPOUR	
V02	AUG.2023	IFR	HAVAYAR Co	M.FAKHARIAN	A.M.MOHSENI	
V01	MAY.2023	IFR	HAVAYAR Co	M.FAKHARIAN	A.M.MOHSENI	
V00	DEC.2022	IFR	HAVAYAR Co	M.FAKHARIAN	A.M.MOHSENI	

REV.	DESCRIPTION	BY	DATE	BY	DATE
		CHECKED		REV. APPR.	

PROJECT NAME: BINAK OILFIELD DEVELOPMENT SURFACE WORK PACKAGES

PROJECT NO.: ---

EPC CONTRACTOR: HIRGAN ENERGY – DESIGN & INSPECTION COMPANIES

EPC/EPD CONTRACTOR: PETROIRAN DEVELOPMENT COMPANY (PEDCO)

THE ORIGINAL AND ALL COPIES OF THIS DRAWING TOGETHER WITH THE COPYRIGHT THEREIN ARE THE SOLE PROPERTY OF N.I.S.O.C./ FIELDS

BINAK OILFIELD DEVELOPMENT SURFACE WORK PACKAGES

DATE	SCALE	DRAWING BY	CHECKED BY	PROJECT ENG.

HAVAYAR

DRAWING TITLE: P&I DIAGRAM LUBRICATION SYSTEM

SCALE	SIZE	DRAWING NO.	SHEET NO.	REV.
N.T.S.C.	A3	BK-GCS-HY-120-PR-PI-0001	3B OF 10	V03

NO CONSTRUCTION PERMITTED UNLESS DRAWING APPROVED

APPROVED FOR CONSTRUCTION BY: DATE:

BUDGET REF.	LOCATION	SIZE	CLASS	SERIAL NO.	SHEET	REVISION

Software Autocad File No BK-GCS-HY-120-PR-PI-0001-V03-NEW

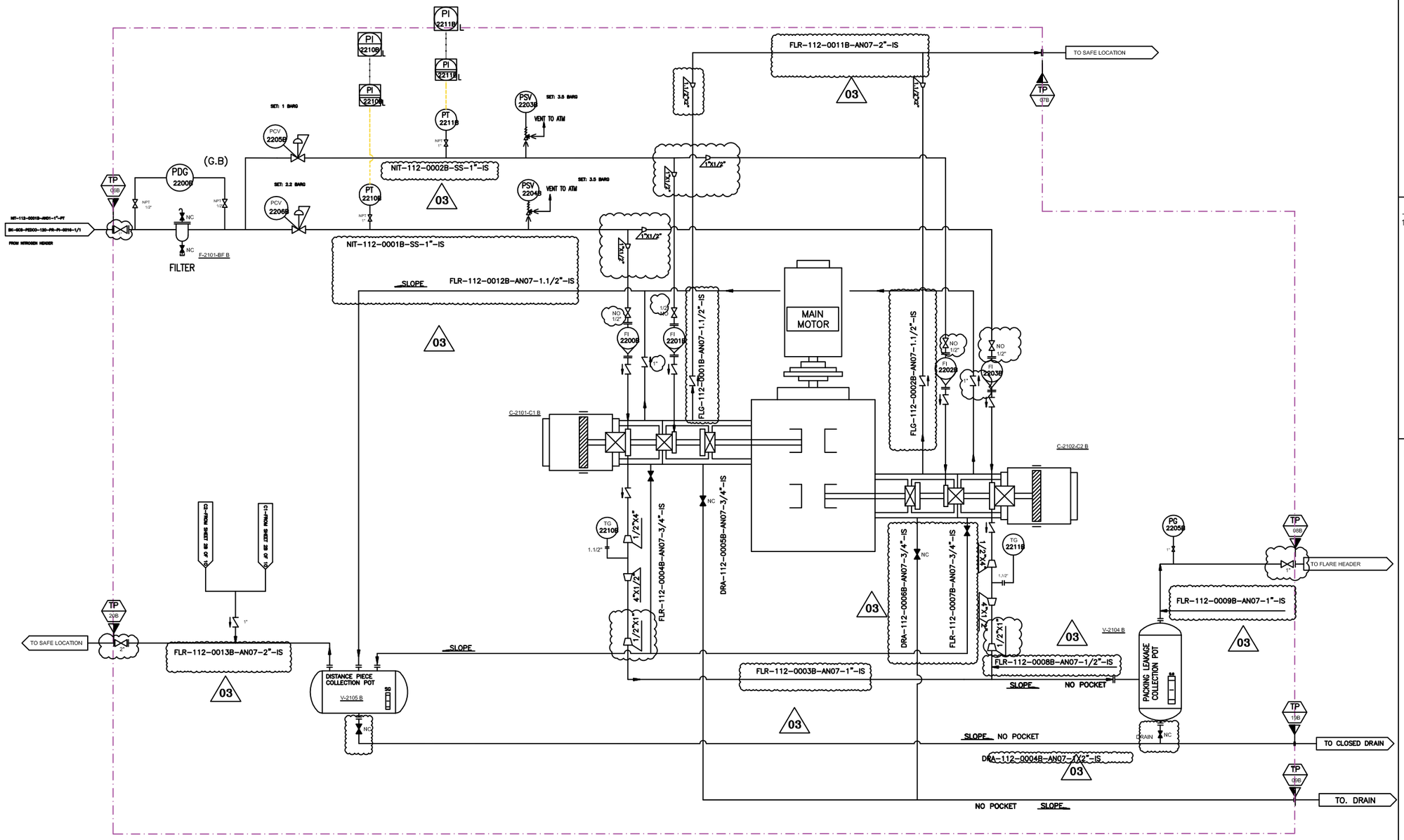

V-2104 B	
PACKING LEAKAGE COLLECTING POT	
DESIGN PRESSURE (barg)	5
DESIGN TEMPERATURE (°C)	85
OPERATING PRESSURE (barg)	1,5
MATERIAL	C.S

F-2101-BF B	
BUFFER GAS FILTER	
DESIGN PRESSURE (barg)	10
DESIGN TEMPERATURE (°C)	85
OPERATING PRESSURE (barg)	7,5
MATERIAL	S.S

V-2105 B	
DISTANCE PIECE COLLECTING POT	
DESIGN PRESSURE (barg)	5
DESIGN TEMPERATURE (°C)	85
OPERATING PRESSURE (barg)	1,5
MATERIAL	C.S

REFERENCE DRAWINGS	DWG. NUMBER
1 -	-

Note :

1. LINE SIZING WILL BE FINALIZED.

Legend :

REV.	DATE	P.O.I.	PREP.	CHK.	APP.	AUT.
V03	JAN.2024	AFC	HAVAYAR Co	M.FAKHARIAN	S.FARAMARZPOUR	
V02	AUG.2023	IFR	HAVAYAR Co	M.FAKHARIAN	A.M.MOHSENI	
V01	MAY.2023	IFR	HAVAYAR Co	M.FAKHARIAN	A.M.MOHSENI	
V00	DEC.2022	IFR	HAVAYAR Co	M.FAKHARIAN	A.M.MOHSENI	

REV.	DESCRIPTION	BY	DATE	BY	DATE
		CHECKED		REV. APPR.	

PROJECT NAME: BINAK OILFIELD DEVELOPMENT SURFACE WORK PACKAGES

PROJECT NO.: ---

EPC CONTRACTOR: HIRGAN ENERGY – DESIGN & INSPECTION COMPANIES

EPC/EPD CONTRACTOR: PEDCO — PETROIRAN DEVELOPMENT COMPANY

THE ORIGINAL AND ALL COPIES OF THIS DRAWING TOGETHER WITH THE COPYRIGHT THEREIN ARE THE SOLE PROPERTY OF N.I.S.O.C./ FIELDS

BINAK OILFIELD DEVELOPMENT SURFACE WORK PACKAGES

DATE	SCALE	DRAWING BY	CHECKED BY	PROJECT ENG.

HAVAYAR

DRAWING TITLE: P&I DIAGRAM N2 PURGING SYSTEM

SCALE	SIZE	DRAWING NO.	SHEET NO.	REV.
N.T.S.C.	A3	BK-GCS-HY-120-PR-PI-0001	49 OF 110	V03

NO CONSTRUCTION PERMITTED UNLESS DRAWING APPROVED

APPROVED FOR CONSTRUCTION BY: DATE:

BUDGET REF.	LOCATION	SIZE	CLASS	SERIAL NO.	SHEET	REVISION

Software Autocad File No: BK-GCS-HY-120-PR-PI-0001-V03-NEW

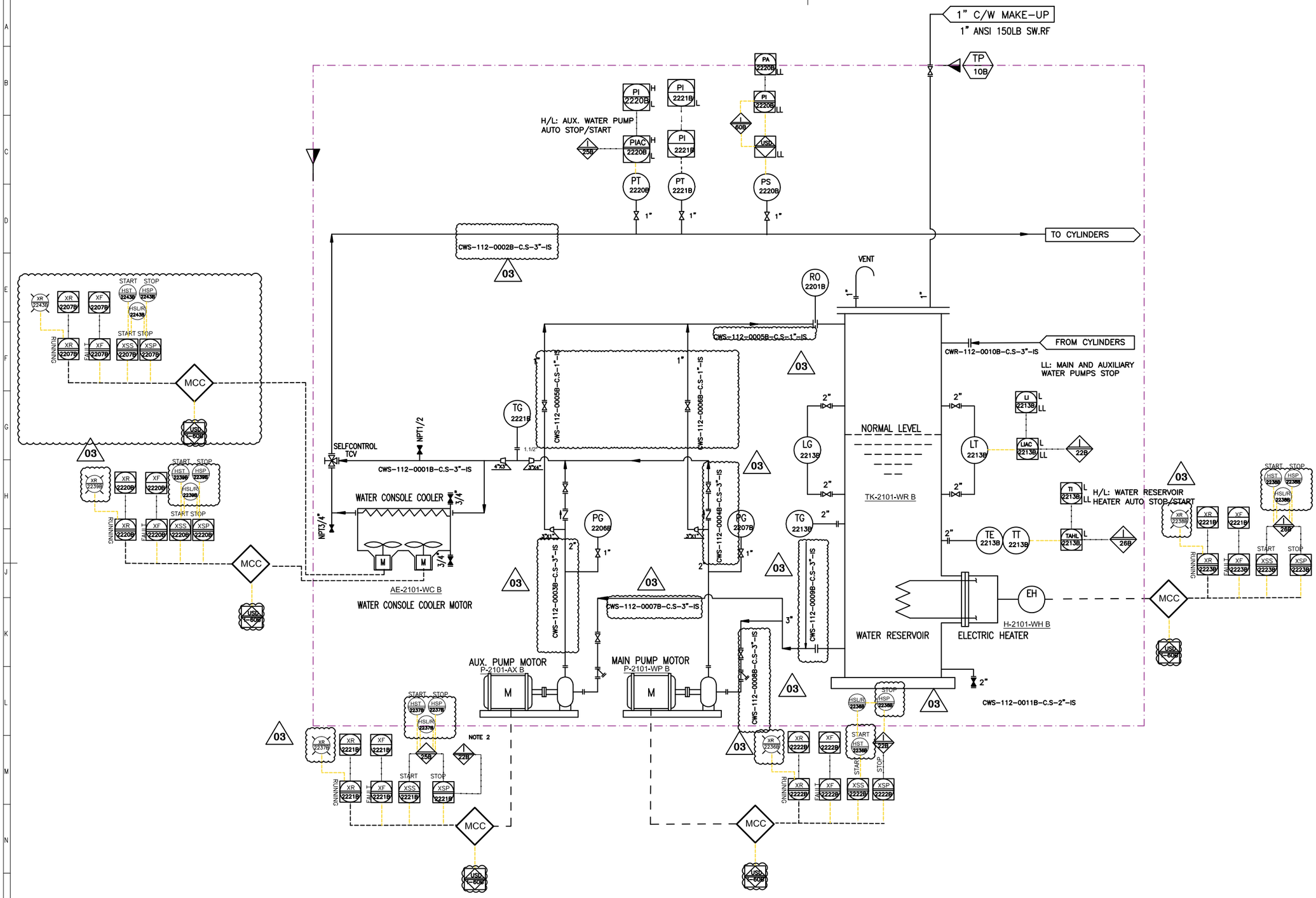

AE-2101-WC B	
WATER COOLER	
TYPE	AIR COOLER
DESIGN PRESSURE (barg)	8
OPERATING PRESSURE (barg)	3
DESIGN TEMPERATURE (°C)	85
OPERATING TEMPERATURE (°C)	70/63

P-2101-WP B	
MAIN WATER PUMP	
TYPE	CENTRIFUGAL
RATED POWER (KW)	WILL BE FINALIZED
OPERATING CAPACITY (TON/H)	15.3
RATED HEAD (M)	40

P-2101-AX B	
AUX. WATER PUMP	
TYPE	CENTRIFUGAL
RATED POWER (KW)	WILL BE FINALIZED
OPERATING CAPACITY (TON/H)	15.3
RATED HEAD (M)	40

H-2101-WH B	
WATER HEATER	
TYPE	ELECTRICAL
RATED POWER (KW)	WILL BE FINALIZED

TK-2101-WR B	
WATER RESERVOIR	
OPERATING PRESSURE (barg)	ATM
OPERATING TEMPERATURE (°C)	70
DESIGN TEMPERATURE (°C)	85
MATERIAL	C.S.

REFERENCE DRAWINGS	DWG. NUMBER
1 -	-

Note :
1. LINE SIZING WILL BE FINALIZED.
2. I-22 INTERLOCK HAS PRIORITY OVER I-25

Legend :

REV.	DATE	P.O.I.	PREP.	CHK.	APP.	AUT.
V03	JAN.2024	AFC	HAVAYAR Co	M.FAKHARIAN	S.FARAMARZPOUR	
V02	AUG.2023	IFR	HAVAYAR Co	M.FAKHARIAN	A.M.MOHSENI	
V01	MAY.2023	IFR	HAVAYAR Co	M.FAKHARIAN	A.M.MOHSENI	
V00	DEC.2022	IFR	HAVAYAR Co	M.FAKHARIAN	A.M.MOHSENI	

REV.	DESCRIPTION	BY	DATE	BY	DATE
		CHECKED		REV. APPR.	

PROJECT NAME: BINAK OILFIELD DEVELOPMENT SURFACE WORK PACKAGES

PROJECT NO.: ---

EPC CONTRACTOR: HIRGAN ENERGY – DESIGN & INSPECTION COMPANIES

EPC/EPD CONTRACTOR: PETROIRAN DEVELOPMENT COMPANY (PEDCO)

THE ORIGINAL AND ALL COPIES OF THIS DRAWING TOGETHER WITH THE COPYRIGHT THEREIN ARE THE SOLE PROPERTY OF N.I.S.O.C./ FIELDS

BINAK OILFIELD DEVELOPMENT SURFACE WORK PACKAGES

DATE	SCALE	DRAWING BY	CHECKED BY	PROJECT ENG.

NO CONSTRUCTION PERMITTED UNLESS DRAWING APPROVED

APPROVED FOR CONSTRUCTION | BY: | DATE:

DRAWING TITLE: P&I DIAGRAM PLAN D COOLING WATER SYSTEM

SCALE	SIZE	DRAWING NO.	SHEET NO.	REV.
N.T.S.C.	A3	BK-GCS-HY-120-PR-PI-0001	5B OF 10	V03

BUDGET REF.	LOCATION	SIZE	CLASS	SERIAL NO.	SHEET	REVISION

File No BK-GCS-HY-120-PR-PI-0001-V03-NEW

REFERENCE DRAWINGS	DWG. NUMBER
1. P&ID – 1ST STAGE COMPRESSION COMPRESSORS	BK-GCS-PEDCO-120-PR-IS-0007_002
2. P&ID – 2ND STAGE COMPRESSION COMPRESSORS	BK-GCS-PEDCO-120-PR-PI-0010_002

Note :

1. LINE SIZING WILL BE FINALIZED.

Legend :

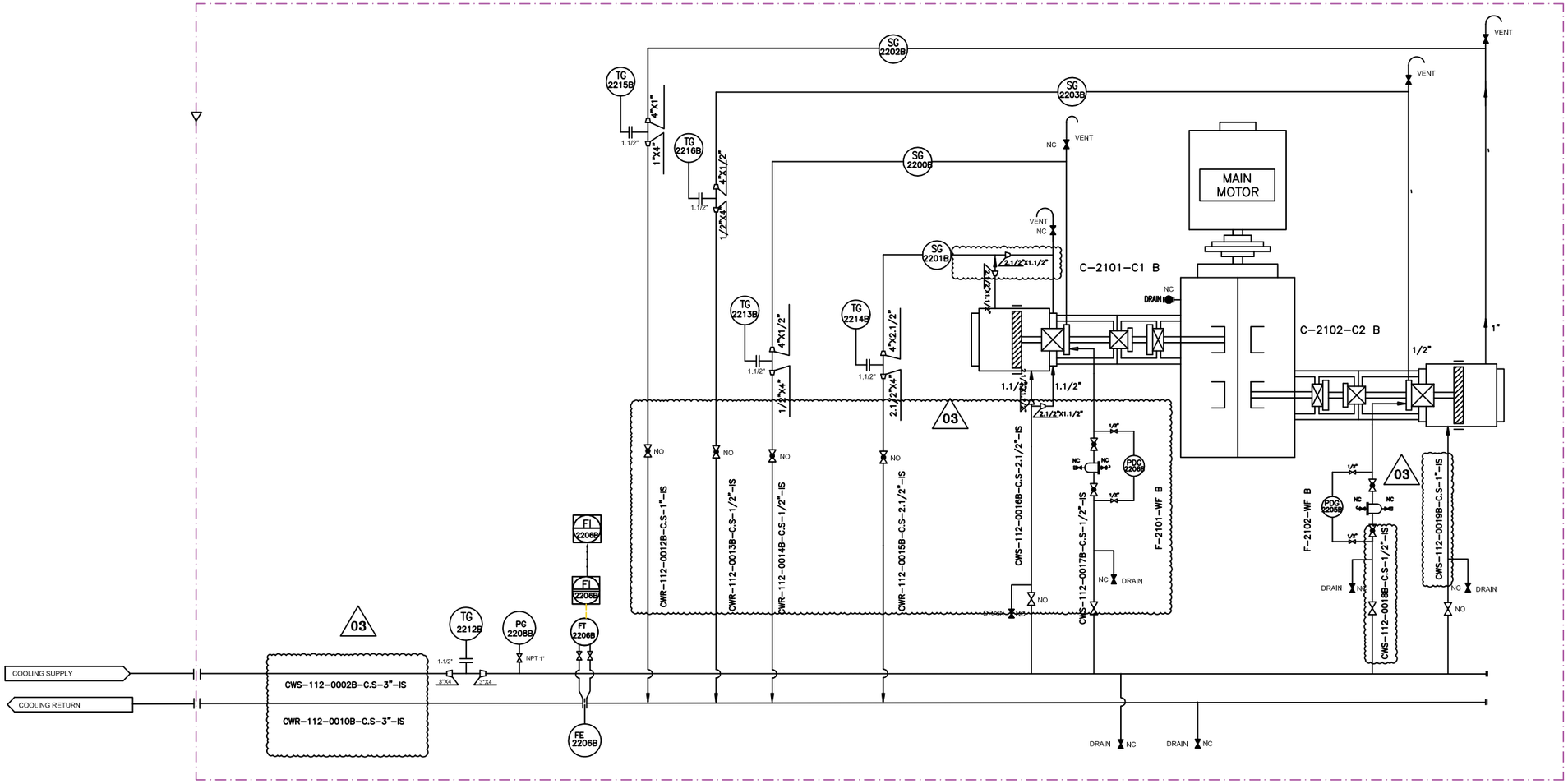

F-2101-WF B	
WATER FILTER	
OPERATING PRESSURE (barg)	3
OPERATING TEMPERATURE (°C)	63
DESIGN PRESSURE (barg)	8
DESIGN TEMPERATURE (°C)	85
MESH SIZE (MICRON)	125

F-2102-WF B	
WATER FILTER	
OPERATING PRESSURE (barg)	3
OPERATING TEMPERATURE (°C)	63
DESIGN PRESSURE (barg)	8
DESIGN TEMPERATURE (°C)	85
MESH SIZE (MICRON)	125

REV.	DATE	P.O.I.	PREP.	CHK.	APP.	AUT.
V03	JAN.2024	AFC	HAVAYAR Co	M.FAKHARIAN	S.FARAMARZPOUR	
V02	AUG.2023	IFR	HAVAYAR Co	M.FAKHARIAN	A.M.MOHSENI	
V01	MAY.2023	IFR	HAVAYAR Co	M.FAKHARIAN	A.M.MOHSENI	
V00	DEC.2022	IFR	HAVAYAR Co	M.FAKHARIAN	A.M.MOHSENI	

REV.	DESCRIPTION	BY	DATE	BY	DATE
		CHECKED		REV. APPR.	

PROJECT NAME: BINAK OILFIELD DEVELOPMENT SURFACE WORK PACKAGES

PROJECT NO.: ---

EPC CONTRACTOR: HIRGAN ENERGY – DESIGN & INSPECTION COMPANIES

EPC/EPD CONTRACTOR: PETROIRAN DEVELOPMENT COMPANY (PEDCO)

این نقشه و کلیه حقوق مادی و معنوی آن متعلق به شرکت ملی نفت ایران می‌باشد و چاپ و تکثیر آن بدون اجازه کتبی مجاز نمی‌باشد

THE ORIGINAL AND ALL COPIES OF THIS DRAWING TOGETHER WITH THE COPYRIGHT THEREIN ARE THE SOLE PROPERTY OF N.I.S.O.C./ FIELDS

BINAK OILFIELD DEVELOPMENT SURFACE WORK PACKAGES

DATE	SCALE	DRAWING BY	CHECKED BY	PROJECT ENG.

NO CONSTRUCTION PERMITTED UNLESS DRAWING APPROVED

APPROVED FOR CONSTRUCTION BY: DATE:

DRAWING TITLE: P&I DIAGRAM COOLING WATER SYSTEM

SCALE	SIZE	DRAWING NO.	SHEET NO.	REV.
N.T.S.C.	A3	BK-GCS-HY-120-PR-PI-0001	6B OF 10	V03

BUDGET REF.	LOCATION	SIZE	CLASS	SERIAL NO.	SHEET	REVISION

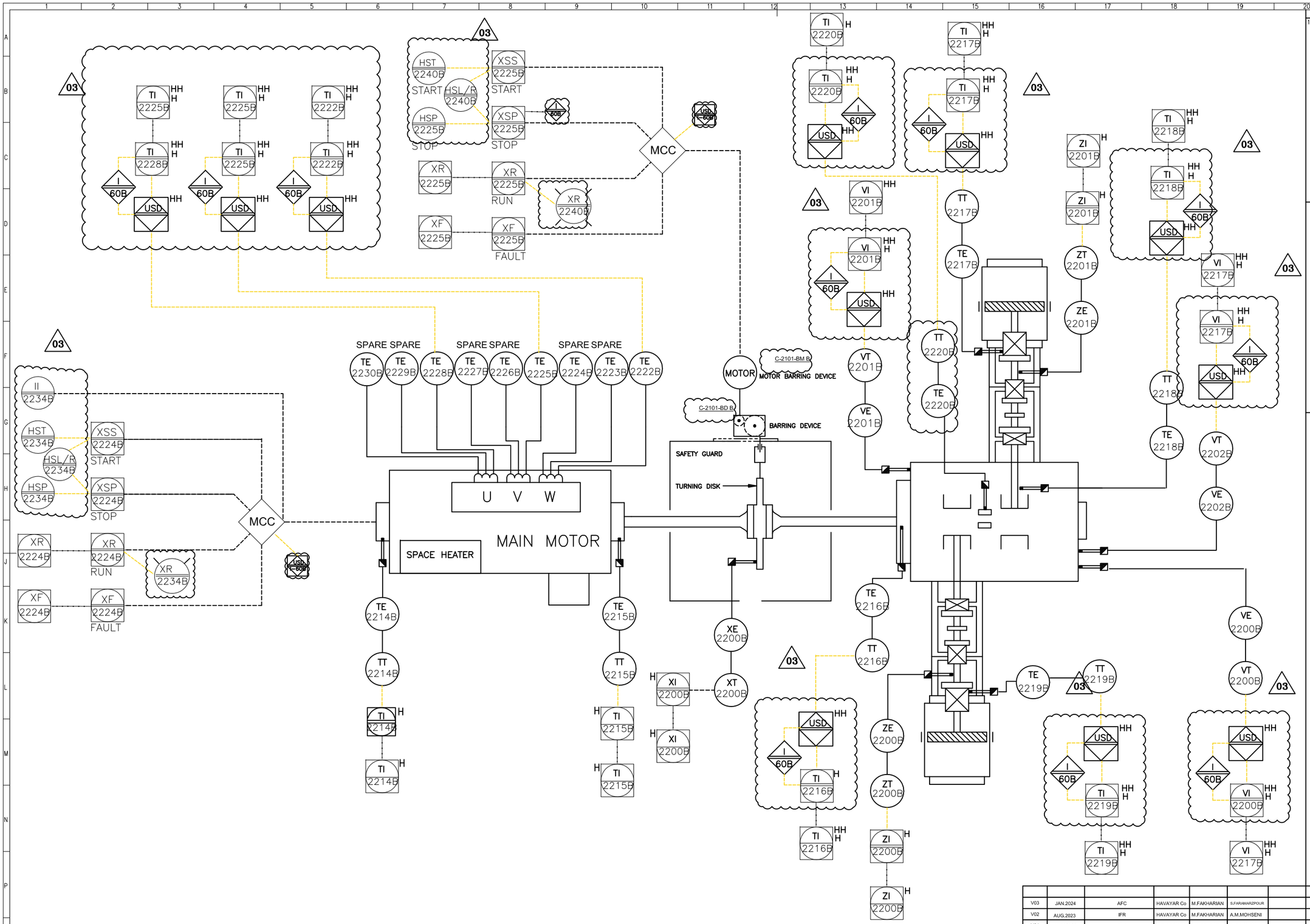

REFERENCE DRAWINGS	DWG. NUMBER
1 –	–

Legend :

REV.	DATE	P.O.I.	PREP.	CHK.	APP.	AUT.
V03	JAN.2024	AFC	HAVAYAR Co	M.FAKHARIAN	S.FARAMARZPOUR	
V02	AUG.2023	IFR	HAVAYAR Co	M.FAKHARIAN	A.M.MOHSENI	
V01	MAY.2023	IFR	HAVAYAR Co	M.FAKHARIAN	A.M.MOHSENI	
V00	DEC.2022	IFR	HAVAYAR Co	M.FAKHARIAN	A.M.MOHSENI	

REV.	DESCRIPTION	BY	DATE	BY	DATE
		CHECKED		REV. APPR.	

PROJECT NAME: BINAK OILFIELD DEVELOPMENT SURFACE WORK PACKAGES

PROJECT NO.: ---

EPC CONTRACTOR: HIRGAN ENERGY – DESIGN & INSPECTION COMPANIES

EPC/EPD CONTRACTOR: PEDCO — PETROIRAN DEVELOPMENT COMPANY

DRAWING TITLE: P&I DIAGRAM MACHINE MONITORING SYSTEM

SCALE	SIZE	DRAWING NO.	SHEET NO.	REV.
N.T.S.C.	A3	BK-GCS-HY-120-PR-PI-0001	7B OF 10	V03

THE ORIGINAL AND ALL COPIES OF THIS DRAWING TOGETHER WITH THE COPYRIGHT THEREIN ARE THE SOLE PROPERTY OF N.I.S.O.C./ FIELDS

BINAK OILFIELD DEVELOPMENT SURFACE WORK PACKAGES

DATE	SCALE	DRAWING BY	CHECKED BY	PROJECT ENG.

NO CONSTRUCTION PERMITTED UNLESS DRAWING APPROVED

APPROVED FOR CONSTRUCTION BY: DATE:

BUDGET REF.	LOCATION	SIZE	CLASS	SERIAL NO.	SHEET	REVISION

03

LCP–2101B

Tag	Description
XR 2230B	OIL HEATER RUNNING
XR 2231B	AUX OIL PUMP MOTOR RUNNING
XR 2232B	LUBRICATOR HEATER RUNNING
XR 2233B	LUBRICATOR MOTOR RUNNING
XR 2234B	MAIN MOTOR RUNNING
XR 2235B	OIL COOLER MOTOR A RUNNING
XR 2236B	MAIN WATER PUMP MOTOR RUNNING
XR 2237B	AUX WATER PUMP MOTOR RUNNING
XR 2238B	WATER HEATER RUNNING
XR 2239B	WATER COOLER A RUNNING
XR 2240B	BARRING MOTOR RUNNING
XR 2242B	OIL COOLER MOTOR B RUNNING
XR 2243B	WATER COOLER B RUNNING
HST 2230B	OIL HEATER ON
HST 2231B	AUX OIL PUMP MOTOR START
HST 2232B	LUBRICATOR HEATER ON
HST 2233B	LUBRICATOR MOTOR START
HST 2234B	MAIN MOTOR START
HST 2235B	OIL COOLER MOTOR A START
HST 2236B	MAIN WATER PUMP MOTOR START
HST 2237B	AUX WATER PUMP MOTOR START
HST 2238B	WATER HEATER ON
HST 2239B	WATER COOLER A START
HST 2240B	BARRING MOTOR START
HST 2242B	OIL COOLER MOTOR B START
HST 2243B	WATER COOLER B START
HSP 2230B	OIL HEATER OFF
HSP 2231B	AUX OIL PUMP MOTOR STOP
HSP 2232B	LUBRICATOR HEATER OFF
HSP 2233B	LUBRICATOR MOTOR STOP
HSP 2234B	MAIN MOTOR STOP
HSP 2235B	OIL COOLER MOTOR A STOP
HSP 2236B	MAIN WATER PUMP MOTOR STOP
HSP 2237B	AUX WATER PUMP MOTOR STOP
HSP 2238B	WATER HEATER OFF
HSP 2239B	WATER COOLER A STOP
HSP 2240B	BARRING MOTOR STOP
HSP 2242B	OIL COOLER MOTOR B STOP
HSP 2243B	WATER COOLER B STOP
HSL/R 2230B	OIL HEATER L–O–R
HSL/R 2231B	AUX OIL PUMP L–O–R
HSL/R 2232B	LUBRICATOR HEATER L–O–R
HSL/R 2233B	LUBRICATOR MOTOR L–O–R
HSL/R 2234B	MAIN MOTOR L–O–R
HSL/R 2235B	OIL COOLER MOTOR A L–O–R
HSL/R 2236B	MAIN WATER PUMP L–O–R
HSL/R 2237B	AUX WATER PUMP L–O–R
HSL/R 2238B	WATER HEATER L–O–R
HSL/R 2239B	WATER COOLER A L–O–R
HSL/R 2240B	BARRING MOTOR L–O–R
HSL/R 2242B	OIL COOLER MOTOR B L–O–R
HSL/R 2243B	WATER COOLER B L–O–R
HSL/R 2241B	COMP LOCAL/REMOTE
XSP 2230B	COMP START PERMISSION
HSR 2242B	RESET
HST 2241B	LAMP TEST
XF 2230B	COMMON ALARM
ESDL 2230B	COMMON SHUT DOWN
ESD 2230B	EMERGENCY SHUT DOWN
HSL/R 2242B1/B2 B3/B4/B5	LOCAL MANU LOAD 0%–25%–50%–75%–100% SW
II 2234B	MAIN MOTOR AMMETER

REFERENCE DRAWINGS	DWG. NUMBER
1 –	–

Note :

Signals of LCP will be connected to UCP.

03

Legend :

REV.	DATE	P.O.I.	PREP.	CHK.	APP.	AUT.
V03	JAN.2024	AFC	HAVAYAR Co	M.FAKHARIAN	S.FARAMARZPOUR	
V02	AUG.2023	IFR	HAVAYAR Co	M.FAKHARIAN	A.M.MOHSENI	
V01	MAY.2023	IFR	HAVAYAR Co	M.FAKHARIAN	A.M.MOHSENI	
V00	DEC.2022	IFR	HAVAYAR Co	M.FAKHARIAN	A.M.MOHSENI	

REV.	DESCRIPTION	BY	DATE	BY	DATE
		CHECKED		REV. APPR.	

PROJECT NAME: BINAK OILFIELD DEVELOPMENT SURFACE WORK PACKAGES

PROJECT NO.: ---

EPC CONTRACTOR: HIRGAN ENERGY – DESIGN & INSPECTION COMPANIES

EPC/EPD CONTRACTOR: PETROIRAN DEVELOPMENT COMPANY PEDCO

THE ORIGINAL AND ALL COPIES OF THIS DRAWING TOGETHER WITH THE COPYRIGHT THEREIN ARE THE SOLE PROPERTY OF N.I.S.O.C./ FIELDS

BINAK OILFIELD DEVELOPMENT SURFACE WORK PACKAGES

DATE	SCALE	DRAWING BY	CHECKED BY	PROJECT ENG.

NO CONSTRUCTION PERMITTED UNLESS DRAWING APPROVED

APPROVED FOR CONSTRUCTION BY: DATE:

DRAWING TITLE: P&I DIAGRAM LOCAL CONTROL STATION

SCALE	SIZE	DRAWING NO.	SHEET NO.	REV.
N.T.SC.	A3	BK–GCS–HY–120–PR–PI–0001	8B OF 10	V03

BUDGET REF.	LOCATION	SIZE	CLASS	SERIAL NO.	SHEET	REVISION

HAVAYAR

Software Autocad File No BK–GCS–HY–120–PR–PI–0001–V03–NEW

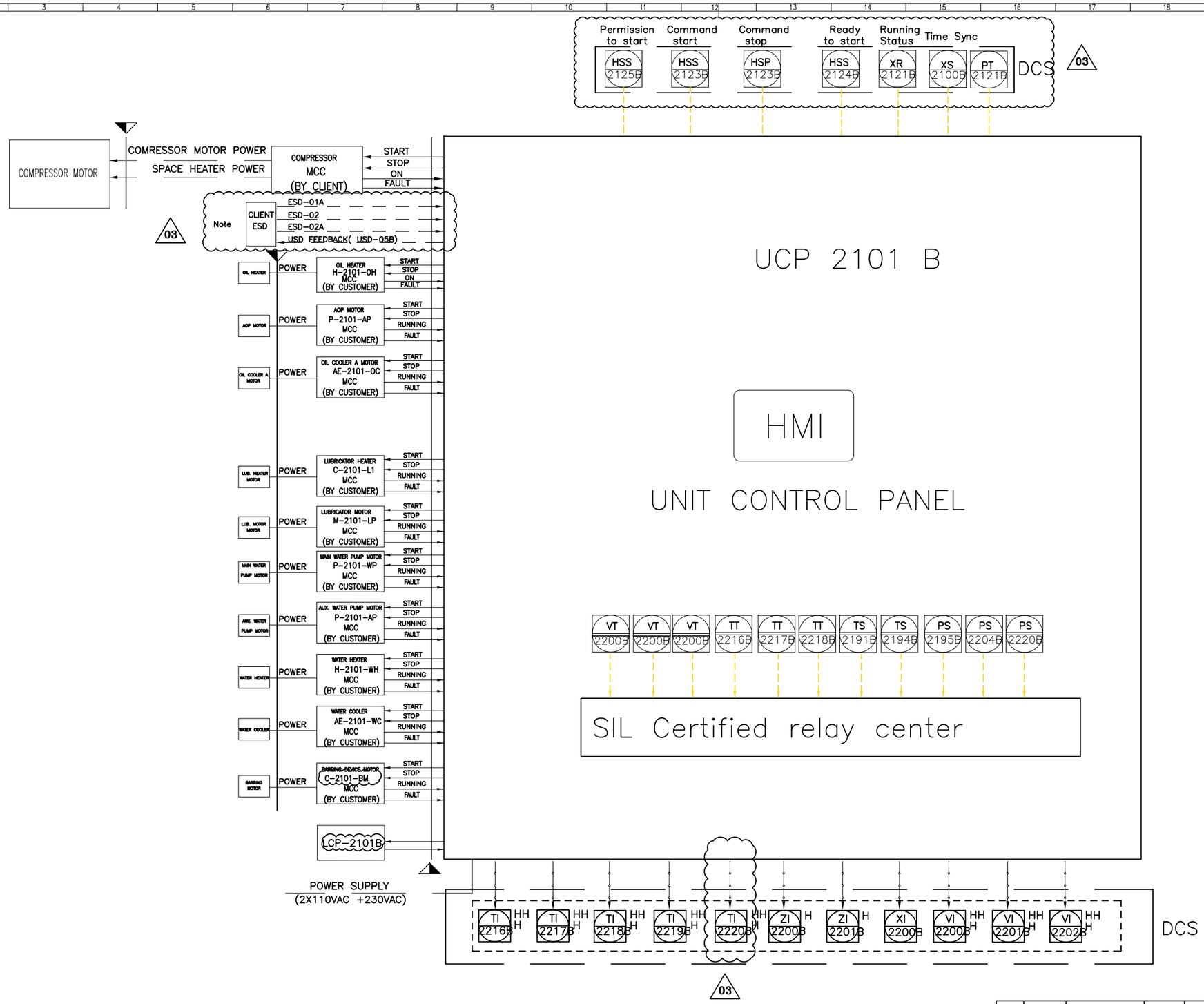

REFERENCE DRAWINGS	DWG. NUMBER
1	-

Note :

Action of ESD-01A/ESD-02A/ESD-02 will be had same action & effect in UCP of package.

For machinery sensor with cause trip, on barrier has been considered. The barrier has two out puts 4-20mA for connecting to PLC & switch for connection to trip relay center.

Legend :

REV.	DATE	P.O.I.	PREP.	CHK.	APP.	AUT.
V03	JAN.2024	AFC	HAVAYAR Co	M.FAKHARIAN	S.FARAMARZPOUR	
V02	AUG.2023	IFR	HAVAYAR Co	M.FAKHARIAN	A.M.MOHSENI	
V01	MAY.2023	IFR	HAVAYAR Co	M.FAKHARIAN	A.M.MOHSENI	
V00	DEC.2022	IFR	HAVAYAR Co	M.FAKHARIAN	A.M.MOHSENI	

REV.	DESCRIPTION	BY	DATE	BY	DATE
		CHECKED		REV. APPR.	

PROJECT NAME: BINAK OILFIELD DEVELOPMENT SURFACE WORK PACKAGES

PROJECT NO.: ---

EPC CONTRACTOR: HIRGAN ENERGY – DESIGN & INSPECTION COMPANIES

EPC/EPD CONTRACTOR: PETROIRAN DEVELOPMENT COMPANY (PEDCO)

THE ORIGINAL AND ALL COPIES OF THIS DRAWING TOGETHER WITH THE COPYRIGHT THEREIN ARE THE SOLE PROPERTY OF N.I.S.O.C./ FIELDS

BINAK OILFIELD DEVELOPMENT SURFACE WORK PACKAGES

DATE	SCALE	DRAWING BY	CHECKED BY	PROJECT ENG.

DRAWING TITLE: P&I DIAGRAM UNIT CONTROL PANEL

NO CONSTRUCTION PERMITTED UNLESS DRAWING APPROVED

APPROVED FOR CONSTRUCTION BY: DATE:

SCALE	SIZE	DRAWING NO.	SHEET NO.	REV.
N.T.S.C.	A3	BK-GCS-HY-120-PR-PI-0001	9B OF 10	V03

BUDGET REF.	LOCATION	SIZE	CLASS	SERIAL NO.	SHEET	REVISION

HAVAYAR

File No BK-GCS-HY-120-PR-PI-0001-V03-NEW

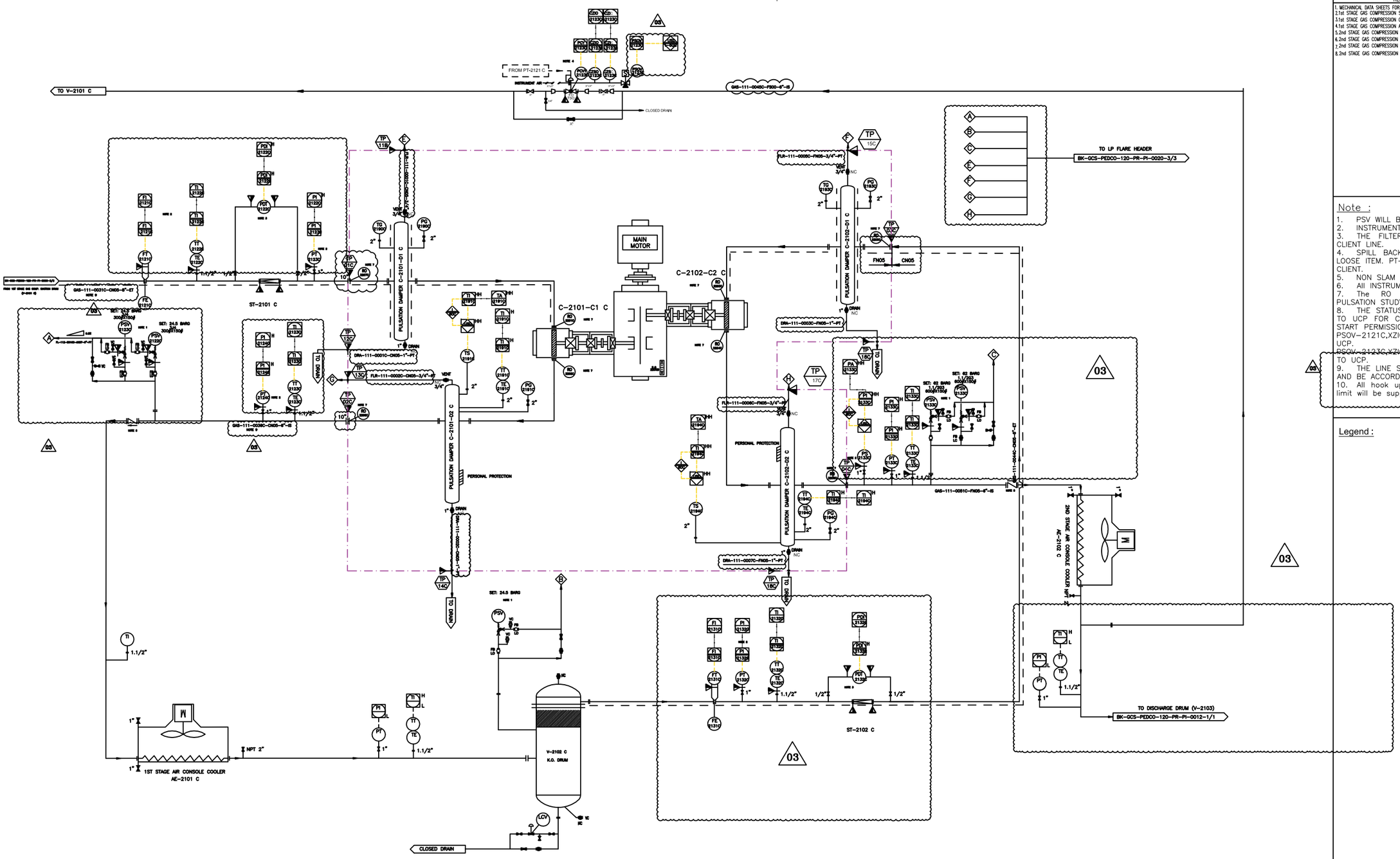

REFERENCE DRAWINGS	DWG. NUMBER
1. MECHANICAL DATA SHEETS FOR GAS COMPRESSORS PACKAGES	BK-GCS-PEDCO-120-ME-DT-0031_D06
2.1st STAGE GAS COMPRESSION SUCTION DRUMS	BK-GCS-PEDCO-120-PR-PI-0006_D06
3.1st STAGE GAS COMPRESSION COMPRESSORS	BK-GCS-PEDCO-120-PR-PI-0007_D06
4.1st STAGE GAS COMPRESSION AIR COOLERS	BK-GCS-PEDCO-120-PR-PI-0008_D06
5.2nd STAGE GAS COMPRESSION SUCTION DRUMS	BK-GCS-PEDCO-120-PR-PI-0009_D06
6.2nd STAGE GAS COMPRESSION COMPRESSORS	BK-GCS-PEDCO-120-PR-PI-0010_D06
7.2nd STAGE GAS COMPRESSION AIR COOLERS	BK-GCS-PEDCO-120-PR-PI-0011_D06
8.2nd STAGE GAS COMPRESSION DISCHARGE DRUM	BK-GCS-PEDCO-120-PR-PI-0012_D06

Note :

1. PSV WILL BE SIZED LATER. THE SUPPLY IS LOOSE.
2. INSTRUMENTS WILL BE SUPPLIED LOOSE ON CLIENT LINE.
3. THE FILTER AND PDT WILL BE SUPPLIED LOOSE ON CLIENT LINE.
4. SPILL BACK VALVE WILL BE SUPPLIED BY VENDOR AS LOOSE ITEM. PT-2121A WILL BE SENT FROM DCS TO UCP BY CLIENT.
5. NON SLAM TYPE CHECK VALVE.
6. All INSTRUMENTS TAG NUMBER ARE START WITH PREFIX C
7. The RO REQUIREMENT WILL BE FINALIZED AFTER PULSATION STUDY.
8. THE STATUS OF XV-2121 C AND XV-2133 C ARE SENT TO UCP FOR COMPRESSOR START PERMISSION. COMPRESSOR START PERMISSION IS GIVEN WHILE THESE VALVES ARE OPEN. PSOV-2121C,XZIC-2121C,XZIO,2121C WILL BE CONNECTED TO UCP.
PSOV-2123C,XZIC-2123C,XZIO,2123C WILL BE CONNECTED TO UCP.
9. THE LINE SHALL BE EXPANDED TO THE B.L. FLANGE SIZE AND BE ACCORDING TO THE B.L. PIPING CLASS.
10. All hook up material for instrument of Havayar battery limit will be supplied by Havayar.

Legend :

C-2101-C1 C	
1ST STAGE COMPRESSOR CYLINDER	
INLET PRESSURE (barg)	4.8
OUTLET PRESSURE (barg)	18
RATED CAPACITY (kg/h)	8935.5

C-2102-C2 C	
2ND STAGE COMPRESSOR CYLINDER	
INLET PRESSURE (barg)	17
OUTLET PRESSURE (barg)	54.9
RATED CAPACITY (kg/h)	8935.5

C-2101-D1 C	
1ST STAGE SUCTION SNUBBER	
OPERATING PRESSURE (barg)	4.9
OPERATING TEMPERATURE (°C)	36.8
DESIGN PRESSURE (barg)	24.5
DESIGN TEMPERATURE (°C)	180
MATERIAL	C.S.

C-2101-D2 C	
1ST STAGE DISCHARGE SNUBBER	
OPERATING PRESSURE (barg)	18
OPERATING TEMPERATURE (°C)	129
DESIGN PRESSURE (barg)	24.5
DESIGN TEMPERATURE (°C)	180
MATERIAL	C.S.

C-2102-D1 C	
2ND STAGE SUCTION SNUBBER	
OPERATING PRESSURE (barg)	17.1
OPERATING TEMPERATURE (°C)	59.9
DESIGN PRESSURE (barg)	62
DESIGN TEMPERATURE (°C)	180
MATERIAL	C.S.

C-2102-D2 C	
2ND STAGE DISCHARGE SNUBBER	
OPERATING PRESSURE (barg)	54.9
OPERATING TEMPERATURE (°C)	148
DESIGN PRESSURE (barg)	62
DESIGN TEMPERATURE (°C)	180
MATERIAL	C.S.

REV.	DATE	P.O.I.	PREP.	CHK.	APP.	AUT.
V03	JAN.2024	AFC	HAVAYAR Co	M.FAKHARIAN	S.FARAMARZPOUR	
V02	AUG.2023	IFR	HAVAYAR Co	M.FAKHARIAN	A.M.MOHSENI	
V01	MAY.2023	IFR	HAVAYAR Co	M.FAKHARIAN	A.M.MOHSENI	
V00	DEC.2022	IFR	HAVAYAR Co	M.FAKHARIAN	A.M.MOHSENI	

REV.	DESCRIPTION	BY	DATE	BY	DATE
		CHECKED		REV. APPR.	

PROJECT NAME: BINAK OILFIELD DEVELOPMENT SURFACE WORK PACKAGES

PROJECT NO.: ---

EPC CONTRACTOR: HIRGAN ENERGY – DESIGN & INSPECTION COMPANIES

EPC/EPD CONTRACTOR: PETROIRAN DEVELOPMENT COMPANY — PEDCO

THE ORIGINAL AND ALL COPIES OF THIS DRAWING TOGETHER WITH THE COPYRIGHT THEREIN ARE THE SOLE PROPERTY OF N.I.S.O.C./ FIELDS

BINAK OILFIELD DEVELOPMENT SURFACE WORK PACKAGES

DATE	SCALE	DRAWING BY	CHECKED BY	PROJECT ENG.

NO CONSTRUCTION PERMITTED UNLESS DRAWING APPROVED

APPROVED FOR CONSTRUCTION BY: DATE:

DRAWING TITLE: P&I DIAGRAM PROCESS GAS

SCALE	SIZE	DRAWING NO.	SHEET NO.	REV.
N.T.S.C.	A3	BK-GCS-HY-120-PR-PI-0001	1C OF 10	V03

BUDGET REF.	LOCATION	SIZE	CLASS	SERIAL NO.	SHEET	REVISION

Software Autocad File No BK-GCS-HY-120-PR-PI-0001-V03-NEW

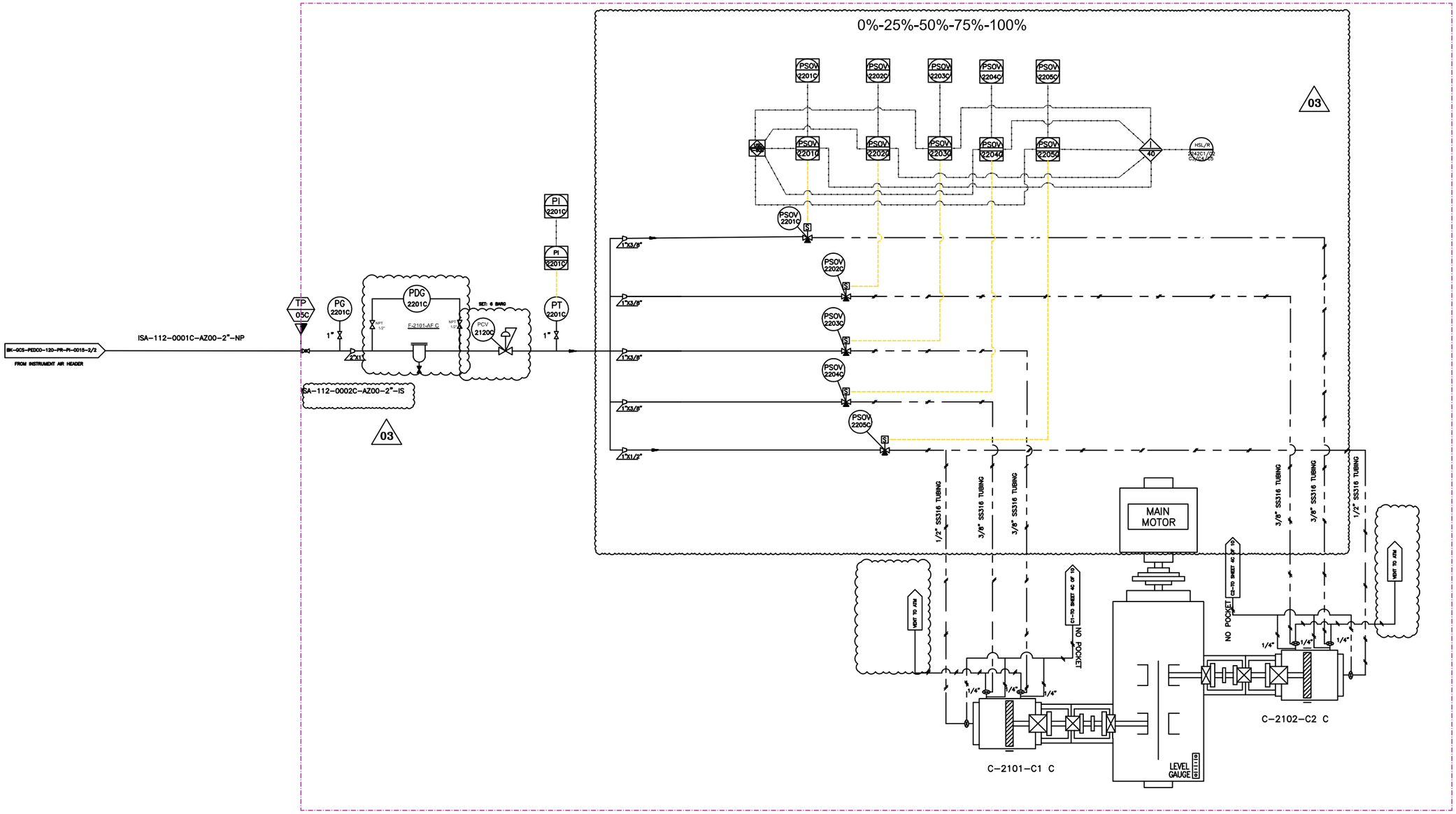

REFERENCE DRAWINGS	DWG. NUMBER
1 -	-

Note :
1. LINE SIZING WILL BE FINALIZED.
2. THE UNLOADERS ARE AIR TO LOAD TYPE.

Legend :

REV.	DATE	P.O.I.	PREP.	CHK.	APP.	AUT.
V03	JAN.2024	AFC	HAVAYAR Co	M.FAKHARIAN	S.FARAMARZPOUR	
V02	AUG.2023	IFR	HAVAYAR Co	M.FAKHARIAN	A.M.MOHSENI	
V01	MAY.2023	IFR	HAVAYAR Co	M.FAKHARIAN	A.M.MOHSENI	
V00	DEC.2022	IFR	HAVAYAR Co	M.FAKHARIAN	A.M.MOHSENI	

REV.	DESCRIPTION	BY	DATE	BY	DATE
		CHECKED		REV. APPR.	

PROJECT NAME: BINAK OILFIELD DEVELOPMENT SURFACE WORK PACKAGES

PROJECT NO.: ---

EPC CONTRACTOR: HIRGAN ENERGY – DESIGN & INSPECTION COMPANIES

EPC/EPD CONTRACTOR: PETROIRAN DEVELOPMENT COMPANY (PEDCO)

HAVAYAR

THE ORIGINAL AND ALL COPIES OF THIS DRAWING TOGETHER WITH THE COPYRIGHT THEREIN ARE THE SOLE PROPERTY OF N.I.S.O.C./ FIELDS

BINAK OILFIELD DEVELOPMENT SURFACE WORK PACKAGES

DATE	SCALE	DRAWING BY	CHECKED BY	PROJECT ENG.

NO CONSTRUCTION PERMITTED UNLESS DRAWING APPROVED

APPROVED FOR CONSTRUCTION | BY: | DATE:

DRAWING TITLE: P&I DIAGRAM CAPACITY CONTROL

SCALE	SIZE	DRAWING NO.	SHEET NO.	REV.
N.T.SC.	A3	BK-GCS-HY-120-PR-PI-0001	2C OF 10	V03

BUDGET REF.	LOCATION	SIZE	CLASS	SERIAL NO.	SHEET	REVISION

Software: Autocad

File No: BK-GCS-HY-120-PR-PI-0001-V03-NEW

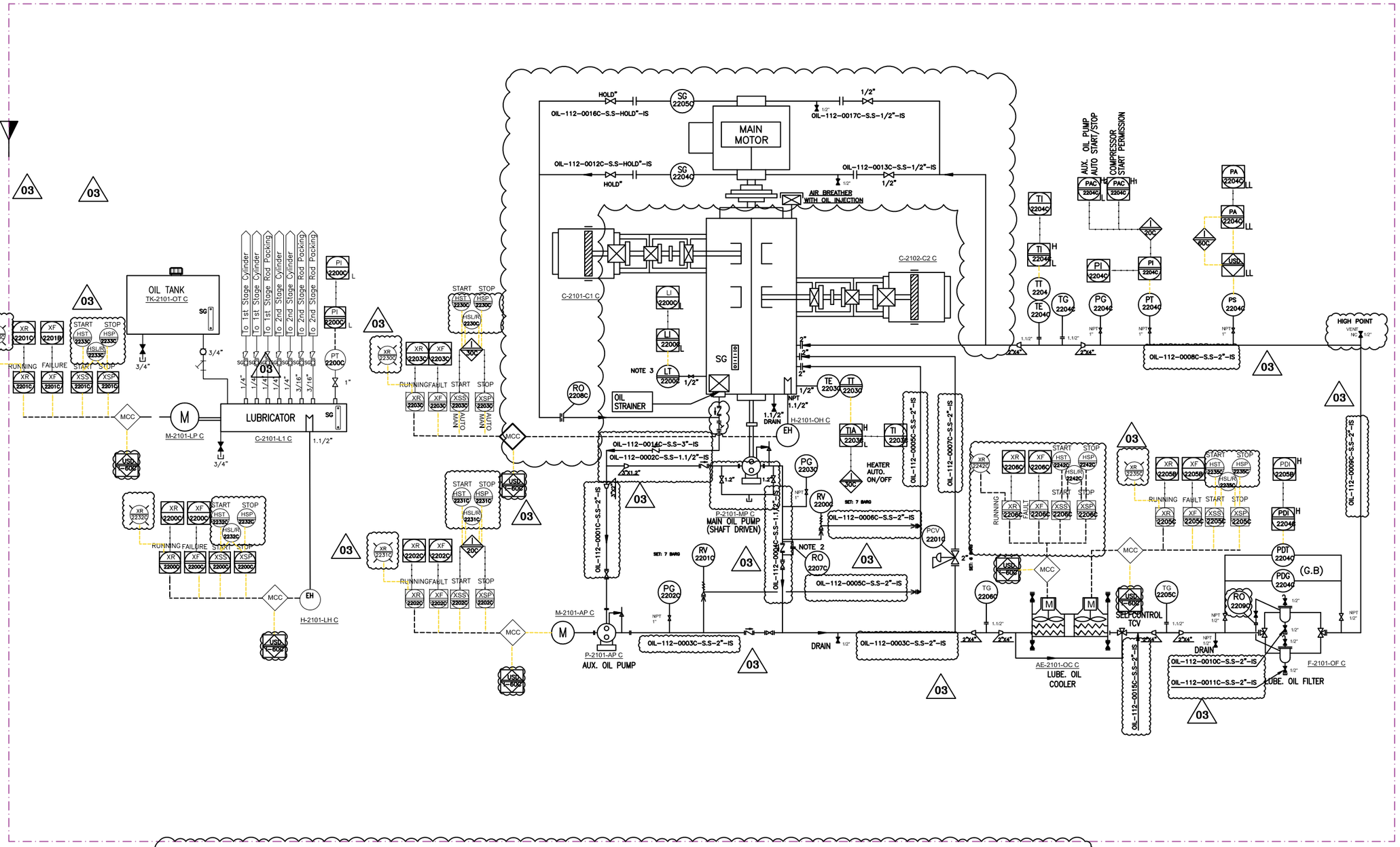

TK-2101-OT C

OIL TANK	
OPERATING PRESSURE (barg)	ATM
OPERATING TEMPERATURE (°C)	ATM
DESIGN TEMPERATURE (°C)	85
MATERIAL	S.S.
CAPACITY (LIT)	80

P-2101-MP C

MAIN OIL PUMP	
OPERATING PRESSURE (barg)	5
OPERATING TEMPERATURE (°C)	70
DESIGN PRESSURE (barg)	10
RATED POWER	SHAFT DRIVEN
RATED CAPACITY (L/min)	131
MATERIAL	CAST IRON

P-2101-AP C

AUX. OIL PUMP	
OPERATING PRESSURE (barg)	HOLD
OPERATING TEMPERATURE (°C)	70
DESIGN PRESSURE (barg)	10
RATED POWER (kW)	7.5
RATED CAPACITY (L/min)	131
MATERIAL	CAST IRON

F-2101-OF C

LUBE OIL FILTER	
OPERATING PRESSURE (barg)	5
OPERATING TEMPERATURE (°C)	60
DESIGN PRESSURE (barg)	10
DESIGN TEMPERATURE (°C)	85
MATERIAL	S.S
MESH SIZE (MICRON)	10

AE-2101-OC C

LUBE OIL COOLER	
TYPE	AIR COOLER
OPERATING PRESSURE (barg)	5
DESIGN PRESSURE (barg)	10
OPERATING TEMPERATURE (°C)	70/60
DESIGN TEMPERATURE (°C)	85
MATERIAL	S.S

P-2101-MP C

LUBRICATOR PUMP	
OPERATING PRESSURE (barg)	5.5 ~ 7
RATED POWER (kW)	0.4

P-2101-MP C

LUBRICATOR HEATER	
MATERIAL	S.S.
RATED POWER (kW)	0.4

REFERENCE DRAWINGS	DWG. NUMBER
1 -	-

Note :
1. LINE SIZING WILL BE FINALIZED.
2. INSTEAD OF RO, DRILLED CHECK VALVE MAY BE USED.
3. DIFFERENTIAL PRESSURE TYPE.

Legend :

REV.	DATE	P.O.I.	PREP.	CHK.	APP.	AUT.
V03	JAN.2024	AFC	HAVAYAR Co	M.FAKHARIAN	S.FARAMARZPOUR	
V02	AUG.2023	IFR	HAVAYAR Co	M.FAKHARIAN	A.M.MOHSENI	
V01	MAY.2023	IFR	HAVAYAR Co	M.FAKHARIAN	A.M.MOHSENI	
V00	DEC.2022	IFR	HAVAYAR Co	M.FAKHARIAN	A.M.MOHSENI	

REV.	DESCRIPTION	BY	DATE	BY	DATE
		CHECKED		REV. APPR.	

PROJECT NAME: BINAK OILFIELD DEVELOPMENT SURFACE WORK PACKAGES

PROJECT NO.: ---

EPC CONTRACTOR: HIRGAN ENERGY – DESIGN & INSPECTION COMPANIES

EPC/EPD CONTRACTOR: PEDCO — PETROIRAN DEVELOPMENT COMPANY

HAVAYAR

DRAWING TITLE: P&I DIAGRAM LUBRICATION SYSTEM

SCALE	SIZE	DRAWING NO.	SHEET NO.	REV.
N.T.S.C.	A3	BK-GCS-HY-120-PR-PI-0001	3C OF 10	V03

THE ORIGINAL AND ALL COPIES OF THIS DRAWING TOGETHER WITH THE COPYRIGHT THEREIN ARE THE SOLE PROPERTY OF N.I.S.O.C./ FIELDS

BINAK OILFIELD DEVELOPMENT SURFACE WORK PACKAGES

DATE	SCALE	DRAWING BY	CHECKED BY	PROJECT ENG.

NO CONSTRUCTION PERMITTED UNLESS DRAWING APPROVED

APPROVED FOR CONSTRUCTION BY: DATE:

BUDGET REF.	LOCATION	SIZE	CLASS	SERIAL NO.	SHEET	REVISION

File No: BK-GCS-HY-120-PR-PI-0001-V03-NEW

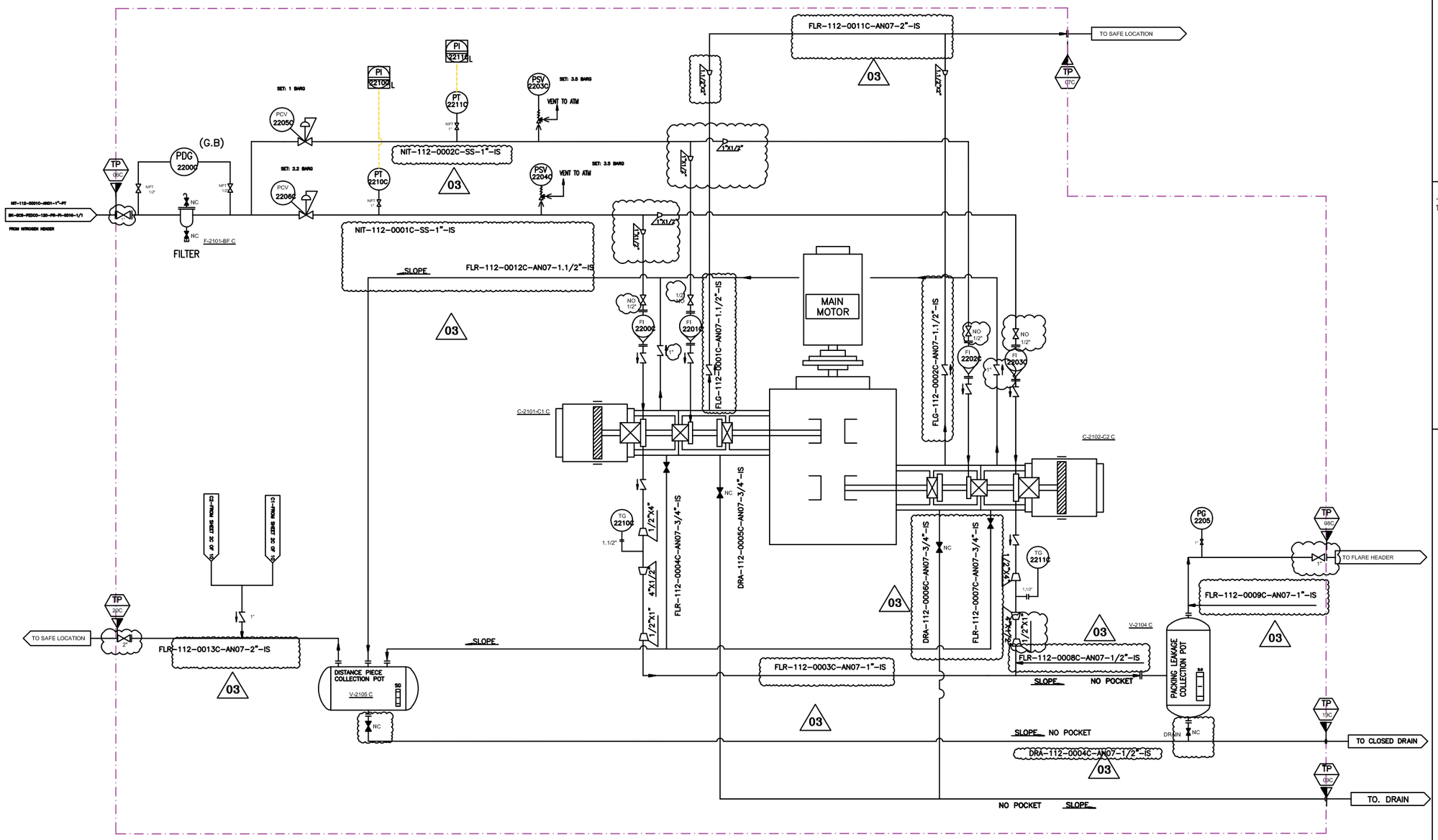

REFERENCE DRAWINGS	DWG. NUMBER
1 -	-

Note :

1. LINE SIZING WILL BE FINALIZED.

Legend :

V-2104 C	
PACKING LEAKAGE COLLECTING POT	
DESIGN PRESSURE (barg)	5
DESIGN TEMPERATURE (°C)	85
OPERATING PRESSURE (barg)	1,5
MATERIAL	C.S

F-2101-BF C	
BUFFER GAS FILTER	
DESIGN PRESSURE (barg)	10
DESIGN TEMPERATURE (°C)	85
OPERATING PRESSURE (barg)	7,5
MATERIAL	S.S

V-2105 C	
DISTANCE PIECE COLLECTING POT	
DESIGN PRESSURE (barg)	5
DESIGN TEMPERATURE (°C)	85
OPERATING PRESSURE (barg)	1,5
MATERIAL	C.S

REV.	DATE	P.O.I.	PREP.	CHK.	APP.	AUT.
V03	JAN.2024	AFC	HAVAYAR Co	M.FAKHARIAN	S.FARAMARZPOUR	
V02	AUG.2023	IFR	HAVAYAR Co	M.FAKHARIAN	A.M.MOHSENI	
V01	MAY.2023	IFR	HAVAYAR Co	M.FAKHARIAN	A.M.MOHSENI	
V00	DEC.2022	IFR	HAVAYAR Co	M.FAKHARIAN	A.M.MOHSENI	

REV.	DESCRIPTION	BY	DATE	BY	DATE
		CHECKED		REV. APPR.	

PROJECT NAME: BINAK OILFIELD DEVELOPMENT SURFACE WORK PACKAGES

PROJECT NO.: ---

EPC CONTRACTOR: HIRGAN ENERGY – DESIGN & INSPECTION COMPANIES

EPC/EPD CONTRACTOR: PETROIRAN DEVELOPMENT COMPANY (PEDCO)

THE ORIGINAL AND ALL COPIES OF THIS DRAWING TOGETHER WITH THE COPYRIGHT THEREIN ARE THE SOLE PROPERTY OF N.I.S.O.C./ FIELDS

BINAK OILFIELD DEVELOPMENT SURFACE WORK PACKAGES

DATE	SCALE	DRAWING BY	CHECKED BY	PROJECT ENG.

NO CONSTRUCTION PERMITTED UNLESS DRAWING APPROVED

APPROVED FOR CONSTRUCTION BY: DATE:

DRAWING TITLE: P&I DIAGRAM N2 PURGING SYSTEM

SCALE	SIZE	DRAWING NO.	SHEET NO.	REV.
N.T.SC.	A3	BK-GCS-HY-120-PR-PI-0001	4C OF 11D	V03

BUDGET REF.	LOCATION	SIZE	CLASS	SERIAL NO.	SHEET	REVISION

HAVAYAR

File No: BK-GCS-HY-120-PR-PI-0001-V03-NEW

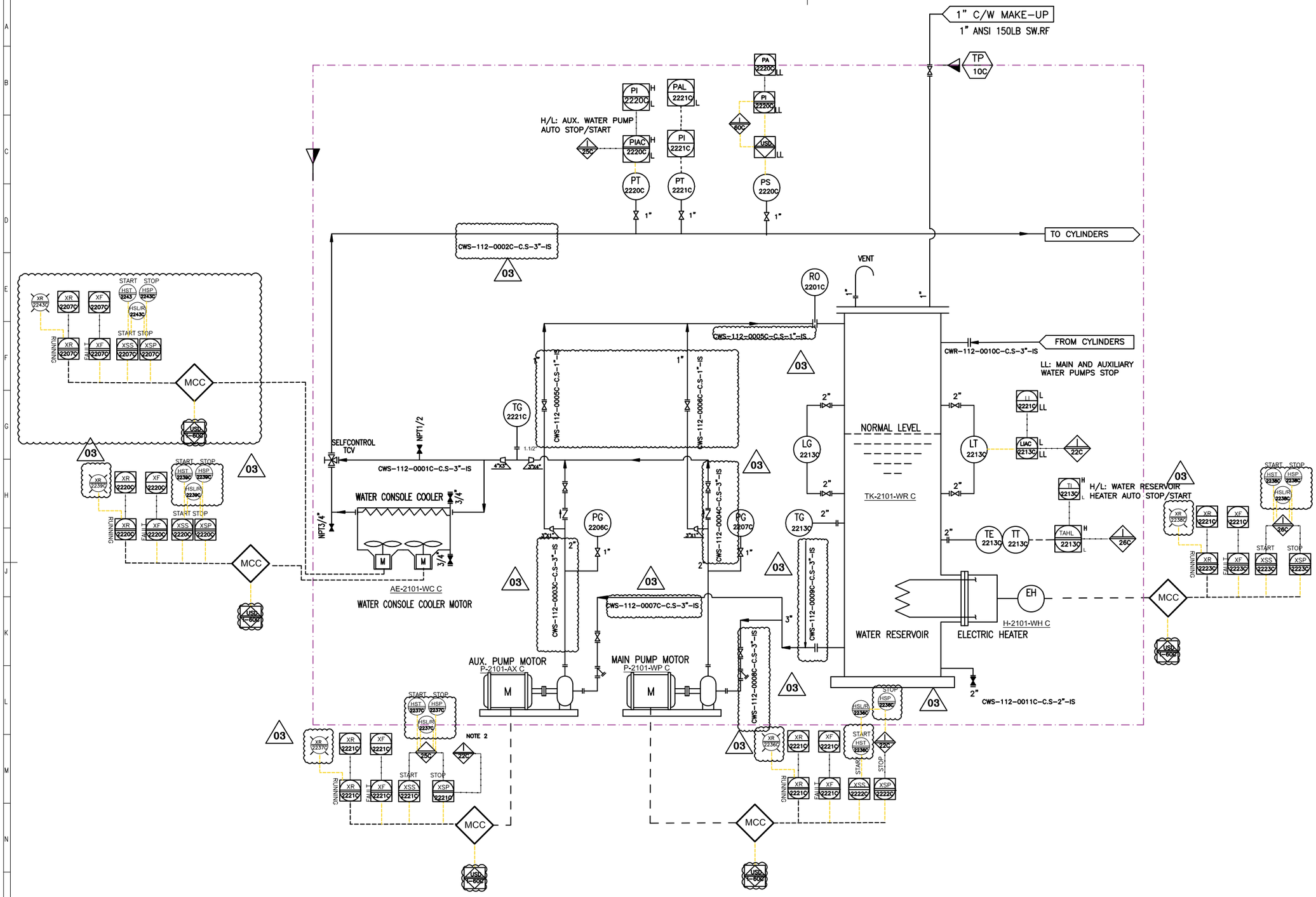

Note :
1. LINE SIZING WILL BE FINALIZED.
2. I-22 INTERLOCK HAS PRIORITY OVER I-25

Legend :

AE-2101-WC C	
WATER COOLER	
TYPE	AIR COOLER
DESIGN PRESSURE (barg)	8
OPERATING PRESSURE (barg)	3
DESIGN TEMPERATURE (°C)	85
OPERATING TEMPERATURE (°C)	70/63

P-2101-WP C	
MAIN WATER PUMP	
TYPE	CENTRIFUGAL
RATED POWER (KW)	WILL BE FINALIZED
OPERATING CAPACITY (TON/H)	15,3
RATED HEAD (M)	40

P-2101-AX C	
AUX. WATER PUMP	
TYPE	CENTRIFUGAL
RATED POWER (KW)	WILL BE FINALIZED
OPERATING CAPACITY (TON/H)	15,3
RATED HEAD (M)	40

H-2101-WH C	
WATER HEATER	
TYPE	ELECTRICAL
RATED POWER (KW)	WILL BE FINALIZED

TK-2101-WR C	
WATER RESERVOIR	
OPERATING PRESSURE (barg)	ATM
OPERATING TEMPERATURE (°C)	70
DESIGN TEMPERATURE (°C)	85
MATERIAL	C.S.

REV.	DATE	P.O.I.	PREP.	CHK.	APP.	AUT.
V03	JAN.2024	AFC	HAVAYAR Co	M.FAKHARIAN	S.FARAMARZPOUR	
V02	AUG.2023	IFR	HAVAYAR Co	M.FAKHARIAN	A.M.MOHSENI	
V01	MAY.2023	IFR	HAVAYAR Co	M.FAKHARIAN	A.M.MOHSENI	
V00	DEC.2022	IFR	HAVAYAR Co	M.FAKHARIAN	A.M.MOHSENI	

REV.	DESCRIPTION	BY	DATE	BY	DATE
		CHECKED		REV. APPR.	

REFERENCE DRAWINGS	DWG. NUMBER
1 -	-

PROJECT NAME: BINAK OILFIELD DEVELOPMENT SURFACE WORK PACKAGES

PROJECT NO.: ---

EPC CONTRACTOR: HIRGAN ENERGY – DESIGN & INSPECTION COMPANIES

EPC/EPD CONTRACTOR: PEDCO — PETROIRAN DEVELOPMENT COMPANY

THE ORIGINAL AND ALL COPIES OF THIS DRAWING TOGETHER WITH THE COPYRIGHT THEREIN ARE THE SOLE PROPERTY OF N.I.S.O.C./ FIELDS

BINAK OILFIELD DEVELOPMENT SURFACE WORK PACKAGES

DATE	SCALE	DRAWING BY	CHECKED BY	PROJECT ENG.

NO CONSTRUCTION PERMITTED UNLESS DRAWING APPROVED

APPROVED FOR CONSTRUCTION	BY:	DATE:

DRAWING TITLE: P&I DIAGRAM PLAN D COOLING WATER SYSTEM

SCALE	SIZE	DRAWING NO.	SHEET NO.	REV.
N.T.S.C.	A3	BK-GCS-HY-120-PR-PI-0001	5C OF 10	V03

BUDGET REF.	LOCATION	SIZE	CLASS	SERIAL NO.	SHEET	REVISION

File No: BK-GCS-HY-120-PR-PI-0001-V03-NEW

REFERENCE DRAWINGS	DWG. NUMBER
1. P&ID – 1ST STAGE COMPRESSION COMPRESSORS	BK-GCS-PEDCO-120-PR-ID-0007_D02
2. P&ID – 2ND STAGE COMPRESSION COMPRESSORS	BK-GCS-PEDCO-120-PR-PI-0010_D02

Note :
1. LINE SIZING WILL BE FINALIZED.

Legend :

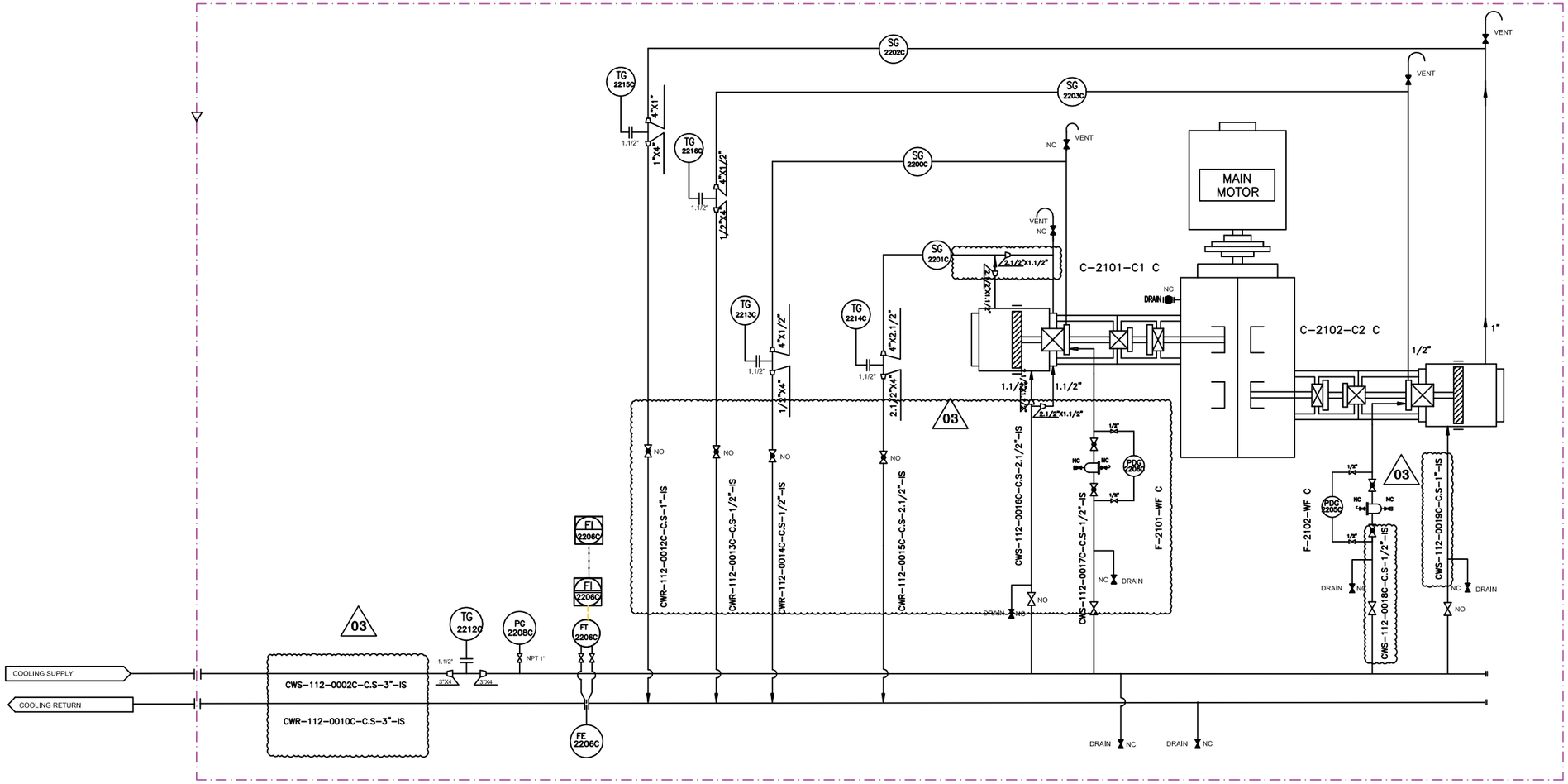

F-2101-WF C	
WATER FILTER	
OPERATING PRESSURE (barg)	3
OPERATING TEMPERATURE (°C)	63
DESIGN PRESSURE (barg)	8
DESIGN TEMPERATURE (°C)	85
MESH SIZE (MICRON)	125

F-2102-WF C	
WATER FILTER	
OPERATING PRESSURE (barg)	3
OPERATING TEMPERATURE (°C)	63
DESIGN PRESSURE (barg)	8
DESIGN TEMPERATURE (°C)	85
MESH SIZE (MICRON)	125

REV.	DATE	P.O.I.	PREP.	CHK.	APP.	AUT.
V03	JAN.2024	AFC	HAVAYAR Co	M.FAKHARIAN	S.FARAMARZIPOUR	
V02	AUG.2023	IFR	HAVAYAR Co	M.FAKHARIAN	A.M.MOHSENI	
V01	MAY.2023	IFR	HAVAYAR Co	M.FAKHARIAN	A.M.MOHSENI	
V00	DEC.2022	IFR	HAVAYAR Co	M.FAKHARIAN	A.M.MOHSENI	

REV.	DESCRIPTION	BY	DATE	BY	DATE
		CHECKED		REV. APPR.	

THE ORIGINAL AND ALL COPIES OF THIS DRAWING TOGETHER WITH THE COPYRIGHT THEREIN ARE THE SOLE PROPERTY OF N.I.S.O.C./ FIELDS

PROJECT NAME: BINAK OILFIELD DEVELOPMENT SURFACE WORK PACKAGES

PROJECT NO.: ---

EPC CONTRACTOR: HIRGAN ENERGY – DESIGN & INSPECTION COMPANIES

EPC/EPD CONTRACTOR: PETROIRAN DEVELOPMENT COMPANY (PEDCO)

BINAK OILFIELD DEVELOPMENT SURFACE WORK PACKAGES

DATE	SCALE	DRAWING BY	CHECKED BY	PROJECT ENG.

HAVAYAR

DRAWING TITLE: P&I DIAGRAM COOLING WATER SYSTEM

NO CONSTRUCTION PERMITTED UNLESS DRAWING APPROVED

APPROVED FOR CONSTRUCTION | BY: | DATE:

SCALE	SIZE	DRAWING NO.	SHEET NO.	REV.
N.T.S.C.	A3	BK-GCS-HY-120-PR-PI-0001	6C OF 10	V03

BUDGET REF.	LOCATION	SIZE	CLASS	SERIAL NO.	SHEET	REVISION

Software Autocad File No BK-GCS-HY-120-PR-PI-0001-V03-NEW

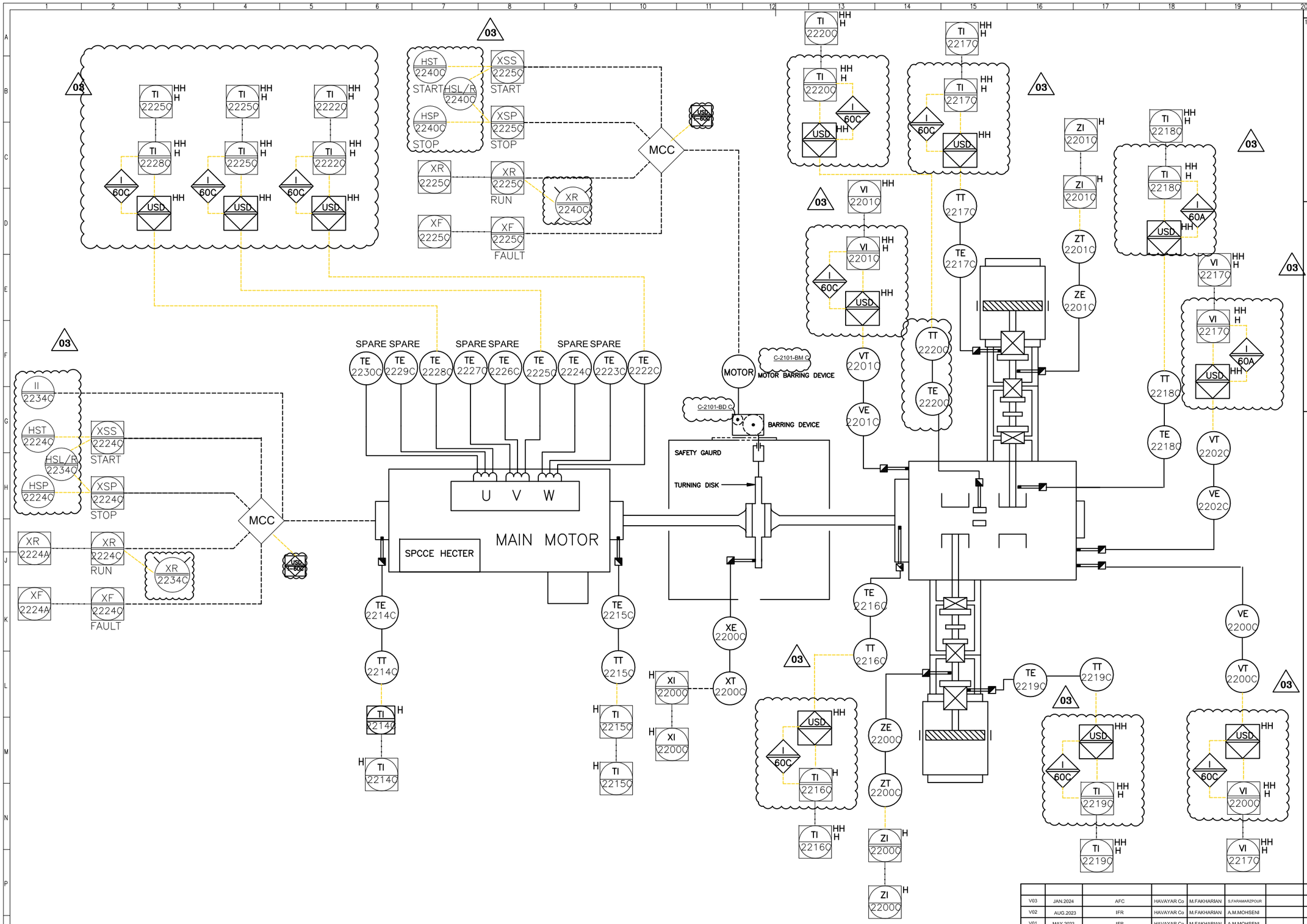

REFERENCE DRAWINGS	DWG. NUMBER
1 -	-

Legend :

REV.	DATE	P.O.I.	PREP.	CHK.	APP.	AUT.
V03	JAN.2024	AFC	HAVAYAR Co	M.FAKHARIAN	S.FARAMARZPOUR	
V02	AUG.2023	IFR	HAVAYAR Co	M.FAKHARIAN	A.M.MOHSENI	
V01	MAY.2023	IFR	HAVAYAR Co	M.FAKHARIAN	A.M.MOHSENI	
V00	DEC.2022	IFR	HAVAYAR Co	M.FAKHARIAN	A.M.MOHSENI	

REV.	DESCRIPTION	BY	DATE	BY	DATE
		CHECKED		REV. APPR.	

PROJECT NAME: BINAK OILFIELD DEVELOPMENT SURFACE WORK PACKAGES

PROJECT NO.: ---

EPC CONTRACTOR: HIRGAN ENERGY – DESIGN & INSPECTION COMPANIES

EPC/EPD CONTRACTOR: PETROIRAN DEVELOPMENT COMPANY — PEDCO

THE ORIGINAL AND ALL COPIES OF THIS DRAWING TOGETHER WITH THE COPYRIGHT THEREIN ARE THE SOLE PROPERTY OF N.I.S.O.C./ FIELDS

BINAK OILFIELD DEVELOPMENT SURFACE WORK PACKAGES

DATE	SCALE	DRAWING BY	CHECKED BY	PROJECT ENG.

NO CONSTRUCTION PERMITTED UNLESS DRAWING APPROVED

APPROVED FOR CONSTRUCTION | BY: | DATE:

DRAWING TITLE: P&I DIAGRAM — MACHINE MONITORING SYSTEM

HAVAYAR

SCALE	SIZE	DRAWING NO.	SHEET NO.	REV.
N.T.SC.	A3	BK-GCS-HY-120-PR-PI-0001	7C OF 10	V03

BUDGET REF.	LOCATION	SIZE	CLASS	SERIAL NO.	SHEET	REVISION

File No: BK-GCS-HY-120-PR-PI-0001-V03-NEW

03

LCP-2101C

Tag	Description
XR 2230C	OIL HEATER RUNNING
XR 2231C	AUX OIL PUMP MOTOR RUNNING
XR 2232C	LUBRICATOR HEATER RUNNING
XR 2233C	LUBRICATOR MOTOR RUNNING
XR 2234C	MAIN MOTOR RUNNING
XR 2235C	OIL COOLER MOTOR A RUNNING
XR 2236C	MAIN WATER PUMP MOTOR RUNNING
XR 2237C	AUX WATER PUMP MOTOR RUNNING
XR 2238C	WATER HEATER RUNNING
XR 2239C	WATER COOLER A RUNNING
XR 2240C	BARRING MOTOR RUNNING
XR 2242C	OIL COOLER MOTOR B RUNNING
XR 2243C	WATER COOLER B RUNNING
HST 2230C	OIL HEATER ON
HST 2231C	AUX OIL PUMP MOTOR START
HST 2232C	LUBRICATOR HEATER ON
HST 2233C	LUBRICATOR MOTOR START
HST 2234C	MAIN MOTOR START
HST 2235C	OIL COOLER MOTOR A START
HST 2236C	MAIN WATER PUMP MOTOR START
HST 2237C	AUX WATER PUMP MOTOR START
HST 2238C	WATER HEATER ON
HST 2239C	WATER COOLER A START
HST 2240C	BARRING MOTOR START
HST 2242C	OIL COOLER MOTOR B START
HST 2243C	WATER COOLER B START
HSP 2230C	OIL HEATER OFF
HSP 2231C	AUX OIL PUMP MOTOR STOP
HSP 2232C	LUBRICATOR HEATER OFF
HSP 2233C	LUBRICATOR MOTOR STOP
HSP 2234C	MAIN MOTOR STOP
HSP 2235C	OIL COOLER MOTOR A STOP
HSP 2236C	MAIN WATER PUMP MOTOR STOP
HSP 2237C	AUX WATER PUMP MOTOR STOP
HSP 2238C	WATER HEATER OFF
HSP 2239C	WATER COOLER A STOP
HSP 2240C	BARRING MOTOR STOP
HSP 2242C	OIL COOLER MOTOR B STOP
HSP 2243C	WATER COOLER B STOP
HSL/R 2230C	OIL HEATER L-O-R
HSL/R 2231C	AUX OIL PUMP L-O-R
HSL/R 2232C	LUBRICATOR HEATER L-O-R
HSL/R 2233C	LUBRICATOR MOTOR L-O-R
HSL/R 2234C	MAIN MOTOR L-O-R
HSL/R 2235C	OIL COOLER MOTOR A L-O-R
HSL/R 2236C	MAIN WATER PUMP L-O-R
HSL/R 2237C	AUX WATER PUMP L-O-R
HSL/R 2238C	WATER HEATER L-O-R
HSL/R 2239C	WATER COOLER A L-O-R
HSL/R 2240C	BARRING MOTOR L-O-R
HSL/R 2242C	OIL COOLER MOTOR B L-O-R
HSL/R 2243C	WATER COOLER B L-O-R
HSL/R 2241C	COMP LOCAL/REMOTE
XSP 2230C	COMP START PERMISSION
HSR 2242C	RESET
HST 2241C	LAMP TEST
XF 2230C	COMMON ALARM
ESDL 2230C	COMMON SHUT DOWN
ESD 2230C	EMERGENCY SHUT DOWN
HSL/R 2242C1/C2 C3/C4/C5	LOCAL MANU LOAD 0%-25%-50%-75%-100% SW
II 2234C	MAIN MOTOR AMMETER

REFERENCE DRAWINGS	DWG. NUMBER
1 -	-

Note :

Signals of LCP will be connected to UCP.

03

Legend :

REV.	DATE	P.O.I.	PREP.	CHK.	APP.	AUT.
V03	JAN.2024	AFC	HAVAYAR Co	M.FAKHARIAN	S.FARAMARZPOUR	
V02	AUG.2023	IFR	HAVAYAR Co	M.FAKHARIAN	A.M.MOHSENI	
V01	MAY.2023	IFR	HAVAYAR Co	M.FAKHARIAN	A.M.MOHSENI	
V00	DEC.2022	IFR	HAVAYAR Co	M.FAKHARIAN	A.M.MOHSENI	

REV.	DESCRIPTION	BY	DATE	BY	DATE
		CHECKED		REV. APPR.	

PROJECT NAME: BINAK OILFIELD DEVELOPMENT SURFACE WORK PACKAGES

PROJECT NO.: ---

EPC CONTRACTOR: HIRGAN ENERGY – DESIGN & INSPECTION COMPANIES

EPC/EPD CONTRACTOR: PETROIRAN DEVELOPMENT COMPANY (PEDCO)

THE ORIGINAL AND ALL COPIES OF THIS DRAWING TOGETHER WITH THE COPYRIGHT THEREIN ARE THE SOLE PROPERTY OF N.I.S.O.C./ FIELDS

BINAK OILFIELD DEVELOPMENT SURFACE WORK PACKAGES

DATE	SCALE	DRAWING BY	CHECKED BY	PROJECT ENG.

HAVAYAR

DRAWING TITLE: P&I DIAGRAM LOCAL CONTROL STATION

NO CONSTRUCTION PERMITTED UNLESS DRAWING APPROVED

APPROVED FOR CONSTRUCTION BY: DATE:

SCALE	SIZE	DRAWING NO.	SHEET NO.	REV.
N.T.SC.	A3	BK-GCS-HY-120-PR-PI-0001	8C OF 10	V03

BUDGET REF.	LOCATION	SIZE	CLASS	SERIAL NO.	SHEET	REVISION

File No: BK-GCS-HY-120-PR-PI-0001-V03-NEW

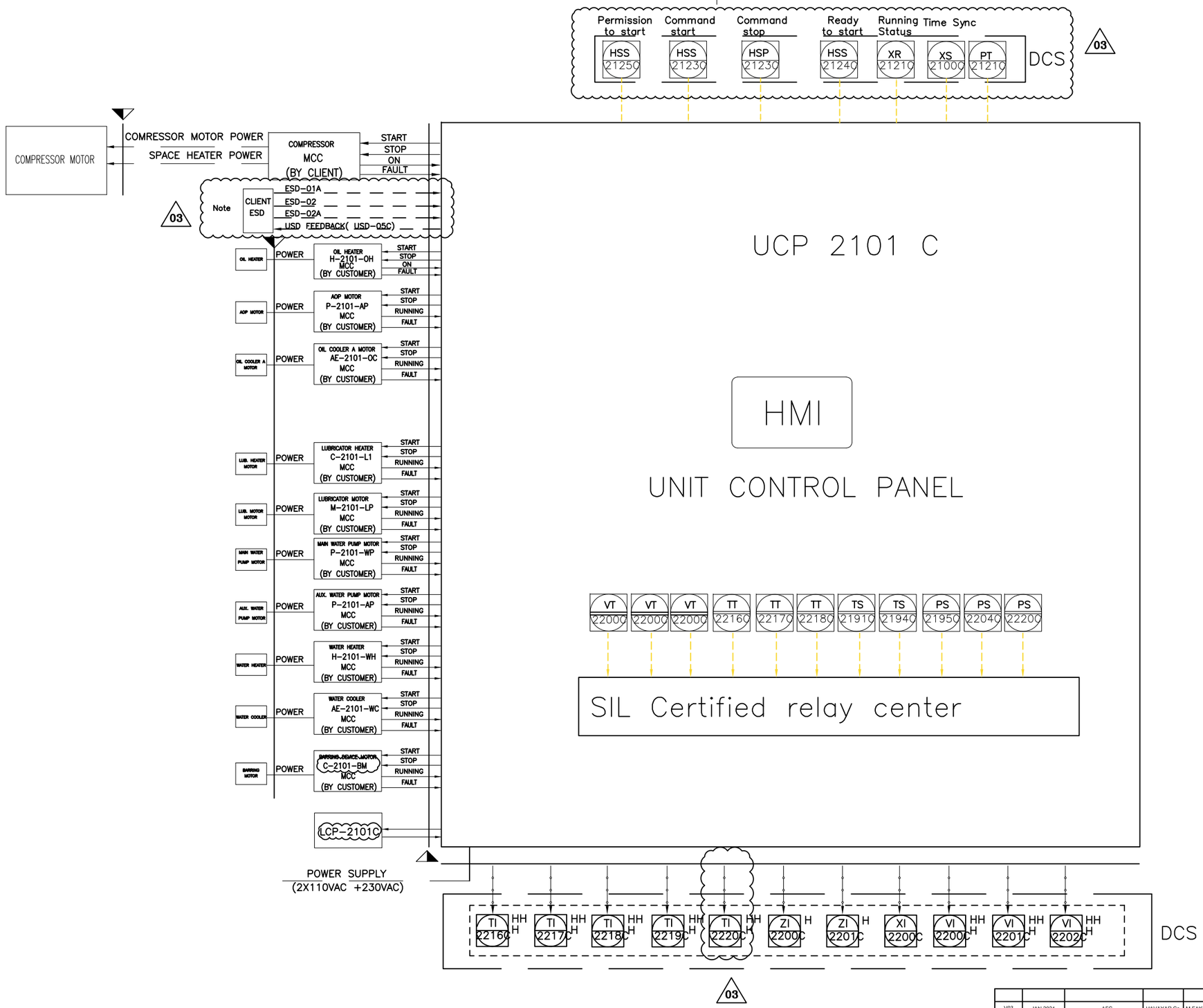

REFERENCE DRAWINGS	DWG. NUMBER
1	-

Note :

Action of ESD-01A/ESD-02A/ESD-02 will be had same action & effect in UCP of package.

For machinery sensor with cause trip, on barrier has been considered. The barrier has two out puts 4-20mA for connecting to PLC & switch for connection to trip relay center.

Legend :

REV.	DATE	P.O.I.	PREP.	CHK.	APP.	AUT.
V03	JAN.2024	AFC	HAVAYAR Co	M.FAKHARIAN	S.FARAMARZPOUR	
V02	AUG.2023	IFR	HAVAYAR Co	M.FAKHARIAN	A.M.MOHSENI	
V01	MAY.2023	IFR	HAVAYAR Co	M.FAKHARIAN	A.M.MOHSENI	
V00	DEC.2022	IFR	HAVAYAR Co	M.FAKHARIAN	A.M.MOHSENI	

REV.	DESCRIPTION	BY	DATE	BY	DATE
		CHECKED		REV. APPR.	

PROJECT NAME: BINAK OILFIELD DEVELOPMENT SURFACE WORK PACKAGES

PROJECT NO.: ---

EPC CONTRACTOR: HIRGAN ENERGY – DESIGN & INSPECTION COMPANIES

EPC/EPD CONTRACTOR: PETROIRAN DEVELOPMENT COMPANY (PEDCO)

THE ORIGINAL AND ALL COPIES OF THIS DRAWING TOGETHER WITH THE COPYRIGHT THEREIN ARE THE SOLE PROPERTY OF N.I.S.O.C./ FIELDS

BINAK OILFIELD DEVELOPMENT SURFACE WORK PACKAGES

DATE	SCALE	DRAWING BY	CHECKED BY	PROJECT ENG.

HAVAYAR

DRAWING TITLE: P&I DIAGRAM UNIT CONTROL PANEL

SCALE	SIZE	DRAWING NO.	SHEET NO.	REV.
N.T.S.C.	A3	BK-GCS-HY-120-PR-PI-0001	9C OF 10	V03

NO CONSTRUCTION PERMITTED UNLESS DRAWING APPROVED

APPROVED FOR CONSTRUCTION | BY: | DATE:

BUDGET REF.	LOCATION	SIZE	CLASS	SERIAL NO.	SHEET	REVISION

Software Autocad File No: BK-GCS-HY-120-PR-PI-0001-V03-NEW

SYMBOL	DESCRIPTION	SYMBOL	DESCRIPTION	SYMBOL	DESCRIPTION	SYMBOL	DESCRIPTION	SYMBOL	DESCRIPTION	SYMBOL	DESCRIPTION
PG	PRESSURE GAUGE	FSOV	SOLENOID VALVE		GATE VALVE		SOLENOID VALVE		LOCAL MOUNTED		ELECTRIC SIGNAL
PIT	PRESS. IND. TRANSMITTER	TT	TEMP. TRANSMITTER		GLOBE VALVE		UNLOADER		MAIN CONTROL PANEL MOUNTED		DATA LINK SIGNAL
PDIT	PRESS. DIFF. IND. TRANSMITTER	TI	TEMP. INDICATOR		NEEDLE VALVE		PROCESS / INSTRUMENT LINE		GAUGE BOARD MOUNTED		FILTER
TG	TEMP. GAUGE	SG	SIGHT GLASS		CHECK VALVE		OTHER UTILITY LINE (C/W)		DCS		STRAINER
TE	TEMP. ELEMENT	RV	RELIEF VALVE		Y-STRAINER		CAPILLARIES TUBE	UCP	UCP INDICATOR		ESD INTERLOCK
PI	PRESSURE INDICATOR	FG	FLOW GAUGE		SELF PRESS. REDUCING REGULATOR		LUB. OIL LINE		Trip Relay Center in UCP	ESD	PLANT ESD
PSV	PRESSURE SAFETY VALVE		BALL VALVE		PRESSURE SAFETY VALVE		INSTRUMENT AIR LINE		FUNCTION IMPLEMENTED IN UCP		REGULATOR WITH FILTER
TCV	TEMPERATURE CONTROL VALVE	EH	ELECTRICAL HEATER		HEAT TRACE		RESTRICTION ORIFICE		INSULATION		PERSONNEL PROTECTION
TP XXX	TIE IN POINT		LIMITS OF HAVAYAR SUPPLY		BATTERY LIMITS	(G.B)	GAUGE BOARD	USD	PACKAGE TRIP		VENT

EQUIPMENT NUMBERING

AA — BCDD E

AA: EQUIPMENT CODE

EQUIPMENT	CODE
AIRCOOLER	AE
COMPRESSOR	C
CONTROL PANEL	LC(LCP)
DIESEL ENGINE	DL
EXCHANGER SHELL-AND TUBE, DOUBLE PIPE, PLATE, COIL, AIR COOLED, REBOILER, BOX COOLER, CASCADE COOLER, SURFACE CONDENSER, BAROMETRIC CONDENSER, WASTE-HEAT BOILER	E
FAN	FA
FILTER	F
FLARE STACK	FS(FST)
GAS TUIRBINE	GT
HEATER, FIRED, FURNACE	H
HOIST	HI
HOSE HOUSE	HH
HOSE REEL	HR
IGNITION PACKAGE	IG
INDOOR HOSE REELS	IN(HR)
MOTOR ELECTRIC	M
OUTDOOR HOSE REELS	OH(OHR)
PACKAGE UNIT	PK
PIG LAUNCHER	PL
PULSATION DAMPENER	PD
PUMP	P
SCALE, WEIGHING, MEASURING	SC
SILENCER, MUFFLER	SI
STACK, CHIMNY	SE
STRAINER	ST(STR)
SUMP	SU
TANK, SILO, HOPPER	TK
TOWER, COLUMN	T
UNLOADER	UL
VESSEL (SCRUBBER, ACCUMULATOR, K.O. DRUM, SPHERE, BULLET, SEPARATOR)	V

B: PLANT NO ABBREVIATION

GCS PLANT : 2

C: UNIT NO

1 PROCESS
2 UTILITY
3 FIRE WATER

DD: SEQUENTIALTIAL NO (01 TO 09) IF MORE REQUIRED IT CAN BE IDENTIFIED WITH TWO DIGIT SUCH THAT THE FIRST DIGIT COMES FROM THE LAST DIGIT UNIT KEY.

E: ALPHABETICAL LETTER (FOR MULTIPLE IDENTICAL EQ. AND SPARE)

LINE NUMBERING

AAA - XXX - YYYY - ZZZZ - D* - CC(*)

(1) – (2) – (3) – (4) – (5) – (6)

(1) FLUID IDENTIFICATION CODE

CODE	DESCRIPTION
A. AIR SYSTEM	
ISA	INSTRUMENT AIR
PLA	PLANT AIR
B. BLOWDOWN & PUMP OUT SYSTEM/EFFLUENT DISPOSAL	
BDN	BLOW DOWN
CBD	CONTINUOUS BLOW DOWN
IBD	INTERMITTENT BLOW DOWN
C. DRAIN (SEWER) SYSTEM	
CDB	CONCRETE DRAIN BOX
CDH	CLOSED DRAIN HEADER
CSW	CHEMICAL SEWER
CY	CHEMICAL DRAIN PIT
DRP	DRAIN PIT
NSW	NON OILY WATER SEWER
OPD	OPEN DRAIN
OSW	OILY WATER SEWER
SSW	SANITARY WATER SEWER
Y	DRAIN FUNNEL (GENERAL)
D. FLARE SYSTEM AND VENT	
ATM	ATMOSPHERE
FLR	FLARE (NORMAL)
HFL	HIGH PRESSURE FLARE
LFL	LOW PRESSURE FLARE
E. FULES	
FLP	FUEL GAS / PURGE GAS
FLO	FUEL OIL
NG	NATURAL GAS
DO	DIESEL OIL
F. SPECIAL GAS SYSTEM	
AIR	AIR (DRYING SERVICE)
FUG	FLUE GAS
NIT	NITROGEN
G. SPECIAL CHEMICAL AND SOLVENT SYSTEM	
CHM	CHEMICALS
MEL	METHANOL
I. WATER SYSTEM	
FWA	FIRE WATER
OWA	OILY WATER
PRW	PROCESS WATER
PTW	POTABLE WATER
PWA	PLANT WATER
RWA	RAW-WATER
CWS	COOLING WATER SUPPLY
CWR	COOLING WATER RETURN

LINE NUMBERING

K. PROCESS SERVICE

GAS	GAS
GSO	GAS OIL
HCB	HYDROCARBON
PRO	PROCESS FLUID
REG	RECYCLE GAS
SLP	SLOP
CRD	CRUDE OIL
TEG	TRIETHYLENE GLYCOL

(2) UNIT SERIAL NUMBER

PROCESS NUMBER : 111
UTILITY NUMBER : 112
FIRE WATER : 113

(3) PIPING SERIAL NUMBER

(4) PIPING CLASS CODE

PIPING CLASS ACCORDING IPS-E-PI-221, EACH PIPING MATERIAL CLASS IS IDENTIFIED BY A FOUR-DIGIT ALPHANUMERIC CODE. THE FIRST ALPHA CHARACTER IDENTIFIES THE PRESSURE RATING AS FOLLOWS:

A RATING CLASS 150
C RATING CLASS 300
F RATING CLASS 600
G RATING CLASS 900
H RATING CLASS 1500
W RATING CLASS 3000
X RATING CLASS 5000

THE SECOND ALPHA CHARACTER INDICATES THE MATERIAL GROUP AS FOLLOW:

N CARBON
S STAINLESS STEE
X NON METALPIPE
Z GALVANIZED CARBON STEEL

THE TWO DIGIT FIGURES INDICATE DIFFERING SERVICE CONDITIONS (e.g. PROCESS FLUID BEING HANDLED OR SERVICE TEMPERATURE LIMITS, OR CORROSION RATE).

3 RD DIGIT		4 TH DIGIT FOR METAL PIPE			4 TH DIGIT FOR NON-METAL PIPE	
FIG.	DESIGN STANDARD	FIG.	C.A.	WALL THICKNESS (ASME B36.10 & B36.19)	FIG.	MATERIAL TYPE
0	ASME B 31.3 (FOR MAIN PART OF PLANT)	0	0 mm	NO	1	GRE
		1	1 mm	NO		
1	ASME B 31.4 (FOR LIQUID PIPELINE)	2	1 mm	YES	2	PE
		4	3 mm	NO		
2	ASME B 31.8 (FOR GAS PIPELINE)	5	3 mm	YES	3	RTP(REINFORCED THERMOPLASTIC PIPE)
		6	6 mm	NO		
		7	6 mm	YES		

(5) NOMINAL PIPE SIZE

(6) CODE OF INSULATION OR HEATH TRACING:

CODE	DESCRIPTION
ET (*)	ELECTRICALLY TRACED & INSULATED
ETT (*)	ELECTRICALLY TRACED WITH HEAT TRANSFER CEMENT
IC	INSULATION COLD
IH	INSULATION HOT
IS	INSULATION FOR PERSONNEL PROTECTION
TB	TRACE BODY AND INSULATE
TBB	TRACE BODY AND BONNET AND INSULATE
PT	PAINTING
NP	NO PAINTING, NO INSULATION
UW	UNDERGROUND WRARRING

* H : HEAT CONSERVATION, W : WINTERIZATION

INSTRUMENT NUMBERING

A | a | b | c | d

A : INSTRUMENT TYPE ASPER SECTION 5.3

(a) : PLANT NO. ASPER SECTION 1.
(b) : UNIT NO. ASPER SECTION 1.
(c) : SEQUENCE NO.
(d) : OPTIONAL SUFFIX (ONE LETTER)

EQUIPMENT

ROTARY PUMP WITH INTERNAL RELIEF VALVE

AIR COOLER

SEPARATOR

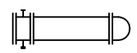
SHELL AND TUBE EXCHANGER

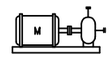
CENTRIFUGAL PUMP

REFERENCE DRAWINGS | DWG. NUMBER

Note :

Legend :

REV.	DATE	P.O.I.	PREP.	CHK.	APP.	AUT.
V03	JAN.2024	AFC	HAVAYAR Co	M.FAKHARIAN	S.FARAMARZPOUR	
V02	AUG.2023	IFR	HAVAYAR Co	M.FAKHARIAN	A.M.MOHSENI	
V01	MAY.2023	IFR	HAVAYAR Co	M.FAKHARIAN	A.M.MOHSENI	
V00	DEC.2022	IFR	HAVAYAR Co	M.FAKHARIAN	A.M.MOHSENI	

REV.	DESCRIPTION	BY	DATE	BY	DATE
		CHECKED		REV. APPR.	

PROJECT NAME: BINAK OILFIELD DEVELOPMENT SURFACE WORK PACKAGES

PROJECT NO.: ---

EPC CONTRACTOR: HIRGAN ENERGY – DESIGN & INSPECTION COMPANIES

EPC/EPD CONTRACTOR: PETROIRAN DEVELOPMENT COMPANY (PEDCO)

HAVAYAR

THE ORIGINAL AND ALL COPIES OF THIS DRAWING TOGETHER WITH THE COPYRIGHT THEREIN ARE THE SOLE PROPERTY OF N.I.S.O.C./ FIELDS

BINAK OILFIELD DEVELOPMENT SURFACE WORK PACKAGES

DATE	SCALE	DRAWING BY	CHECKED BY	PROJECT ENG.

NO CONSTRUCTION PERMITTED UNLESS DRAWING APPROVED

APPROVED FOR CONSTRUCTION | BY: | DATE:

DRAWING TITLE: P&I DIAGRAM SYMBOL AND LEGEND

SCALE	SIZE	DRAWING NO.	SHEET NO.	REV.
N.T.SC.	A3	BK-GCS-HY-120-PR-PI-0001	10 OF 10	V03

BUDGET REF.	LOCATION	SIZE	CLASS	SERIAL NO.	SHEET	REVISION

Software Autocad File No: BK-GCS-HY-120-PR-PI-0001-V03-NEW