All instrument which are designed shall be specified. For Example TS, TCV, CVs, VE, ZE, ...

HY Reply: Noted.

HOOK UP DRAWING

REFERENCE DRAWINGS	DWG. NUMBER
P&I DIAGRAM	BK-GCS-HY-120-PR-PI-0001-V04
INSTRUMENT DATASHEET/ CERTIFICATES	BK-GCS-HY-120-IN-DS-0001-V02

Note :

Legend :

REV.	DATE	P.O.I.	PREP.	CHK.	APP.	AUT.
V01	MAY 2024	IFR	HAVAYAR Co	M.FAKHARIAN	M.SADEGHIAN	
V00	APR 2024	IFR	HAVAYAR Co	M.FAKHARIAN	A.M.MOHSENI	

REV.	DESCRIPTION	BY	DATE	BY	DATE
		CHECKED		REV. APPR.	

PROJECT NAME: BINAK OILFIELD DEVELOPMENT SURFACE WORK PACKAGES

PROJECT NO.: ---

EPC CONTRACTOR: BIDGAN BUDGET – DESIGN & INSPECTION COMPANIES

EPC/EPD CONTRACTOR: PETROIRAN DEVELOPMENT COMPANY PEDCO

اصل و کلیه پرسرجه این نقشه و چاپ ایشان متعلق به شرکت ملی مناطق نفت خیز جنوب می‌باشد

THE ORIGINAL AND ALL COPIES OF THIS DRAWING TOGETHER WITH THE COPYRIGHT THEREIN ARE THE SOLE PROPERTY OF N.I.S.O.C./ FIELDS

BINAK OILFIELD DEVELOPMENT SURFACE WORK PACKAGES

DATE	SCALE	DRAWING BY	CHECKED BY	PROJECT ENG.

DRAWING TITLE: HOOK UP DRAWING

NO CONSTRUCTION PERMITTED UNLESS DRAWING APPROVED

APPROVED FOR CONSTRUCTION BY: DATE:

SCALE	SIZE	DRAWING NO.	SHEET NO.	REV.
N.T.S.C.	A3	BK-GCS-HY-120-IN-DW-0007	01 OF 10	V01

BUDGET REF.	LOCATION	SEER CLASS	SERIAL NO.	SHEET	REVISION

Software Autocad File No: BK-GCS-HY-120-IN-DW-0007-01.dwg

PRESSURE GAUGE	SAFETY VALVE
PRESSURE TRANSMITTER	CONTROL VALVE
PRESSURE SWITCH	CORROSION COUPON
ULTRASONIC FLOWMETER	ON/OFF VALVE
DISPLACER LEVEL TRANSMITTER	LEVEL GAUGE
ROTAMETER	5-WAY VALVE MANIFOLD
TEMPERAURE GAUGE	3-WAY 2 VALVES MANIFOLD FOR PRESSURE TRANSMITTER AND PRESSURE SWITCH
DIFF. PRESSURE GAUGE	UNION
TEMPERATURE TRANSMITTER	TUBE CAP
DIAPHRAGM SEAL	CONNECTOR
TEMPERATURE SWITCH	SNUBBER
3-WAY 2 VALVES MANIFOLD FOR PRESSURE GAUGES	COOLING ELEMENTT

V 01

REFERENCE DRAWINGS	DWG. NUMBER
P&I DIAGRAM	BK-GCS-HY-120-PR-PI-0001-V04
INSTRUMENT DATASHEET/ CERTIFICATES	BK-GCS-HY-120-IN-DS-0001-V02

Note :

Legend :

REV.	DATE	P.O.I.	PREP.	CHK.	APP.	AUT.
V01	MAY.2024	IFR	HAVAYAR Co	M.FAKHARIAN	M.SADEGHIAN	
V00	APR.2024	IFR	HAVAYAR Co	M.FAKHARIAN	A.M.MOHSENI	

REV.	DESCRIPTION	BY	DATE	BY	DATE
		CHECKED		REV. APPR.	

PROJECT NAME: BINAK OILFIELD DEVELOPMENT SURFACE WORK PACKAGES

PROJECT NO.: ---

EPC CONTRACTOR: HIRGAN ENERGY — HIRGAN ENERGY – DESIGN & INSPECTION COMPANIES

EPC/EPD CONTRACTOR: PETROIRAN DEVELOPMENT COMPANY — PEDCO

THE ORIGINAL AND ALL COPIES OF THIS DRAWING TOGETHER WITH THE COPYRIGHT THEREIN ARE THE SOLE PROPERTY OF N.I.S.O.C./ FIELDS

BINAK OILFIELD DEVELOPMENT SURFACE WORK PACKAGES

DATE	SCALE	DRAWING BY	CHECKED BY	PROJECT ENGI.

NO CONSTRUCTION PERMITTED UNLESS DRAWING APPROVED

APPROVED FOR CONSTRUCTION BY: DATE:

DRAWING TITLE: HOOK UP DRAWING

SCALE	SIZE	DRAWING NO.	SHEET NO.	REV.
N.T.S.C.	A3	BK-GCS-HY-120-IN-DW-0007	08 OF 18	V01

BUDGET REF.	LOCATION	SIZE	CLASS	SERIAL NO.	SHEET	REVISION

File No: BK-GCS-HY-120-IN-DW-0007-01.dwg

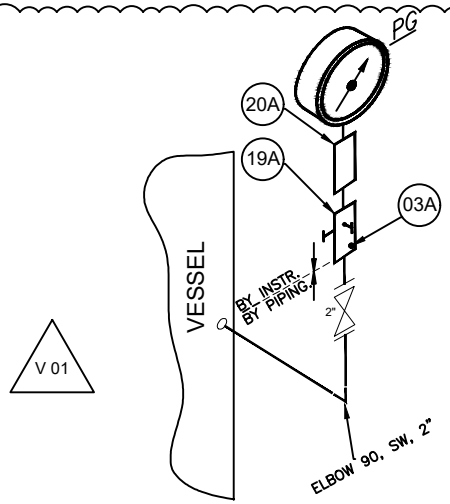

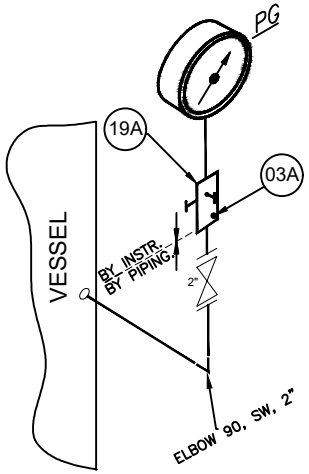

Tag Number	Quantity	REMARK
PG-2190A/B/C	3	FLUID: GAS
PG-2193A/B/C	3	FLUID: GAS

Sour Gas
HY Reply:
Noted.

Tag Number	Quantity	REMARK
PG-2191A/B/C	3	FLUID: GAS

ITEM	QTY	SIZE OR CONNECTION	DESCRIPTION	MATERIAL	TOTAL QTY.	REMARK
19A	1	2x1/2"NPTF + 1/4"	MANIFOLD,3 WAY 2 VALVE	AISI 316SS	9	NACE MATERIAL
20A	1	1/2"NPTM x 1/2"NPTF	OVER RANGE PROTECTION	AISI 316SS	6	NACE MATERIAL
03A	1	1/4"NPTM	HEX HEAD PLUG	AISI 316SS	9	NACE MATERIAL

REFERENCE DRAWINGS	DWG. NUMBER
P&I DIAGRAM	BK-GCS-HY-120-PR-PI-0001-V04
INSTRUMENT DATASHEET/ CERTIFICATES	BK-GCS-HY-120-IN-DS-0001-V02

Note :

Legend :

REV.	DATE	P.O.I.	PREP.	CHK.	APP.	AUT.
V01	MAY.2024	IFR	HAVAYAR Co	M.FAKHARIAN	M.SADEGHIAN	
V00	APR.2024	IFR	HAVAYAR Co	M.FAKHARIAN	A.M.MOHSENI	

REV.	DESCRIPTION	BY	DATE	BY	DATE
		CHECKED		REV. APPR.	

PROJECT NAME: BINAK OILFIELD DEVELOPMENT SURFACE WORK PACKAGES

PROJECT NO.: ---

EPC CONTRACTOR: HIRGAN ENERGY – DESIGN & INSPECTION COMPANIES

EPC/EPD CONTRACTOR: PETROIRAN DEVELOPMENT COMPANY PEDCO

THE ORIGINAL AND ALL COPIES OF THIS DRAWING TOGETHER WITH THE COPYRIGHT THEREIN ARE THE SOLE PROPERTY OF N.I.S.O.C./ FIELDS

BINAK OILFIELD DEVELOPMENT SURFACE WORK PACKAGES

DATE	SCALE	DRAWING BY	CHECKED BY	PROJECT ENG.

DRAWING TITLE: HOOK UP DRAWING

NO CONSTRUCTION PERMITTED UNLESS DRAWING APPROVED

APPROVED FOR CONSTRUCTION BY: DATE:

SCALE	SIZE	DRAWING NO.	SHEET NO.	REV.
N.T.S.C.	A3	BK-GCS-HY-120-IN-DW-0007	03 OF 10	V01

BUDGET REF.	LOCATION	SIZE	CLASS	SERIAL NO.	SHEET	REVISION

File No BK-GCS-HY-120-IN-DW-0007-01.dwg

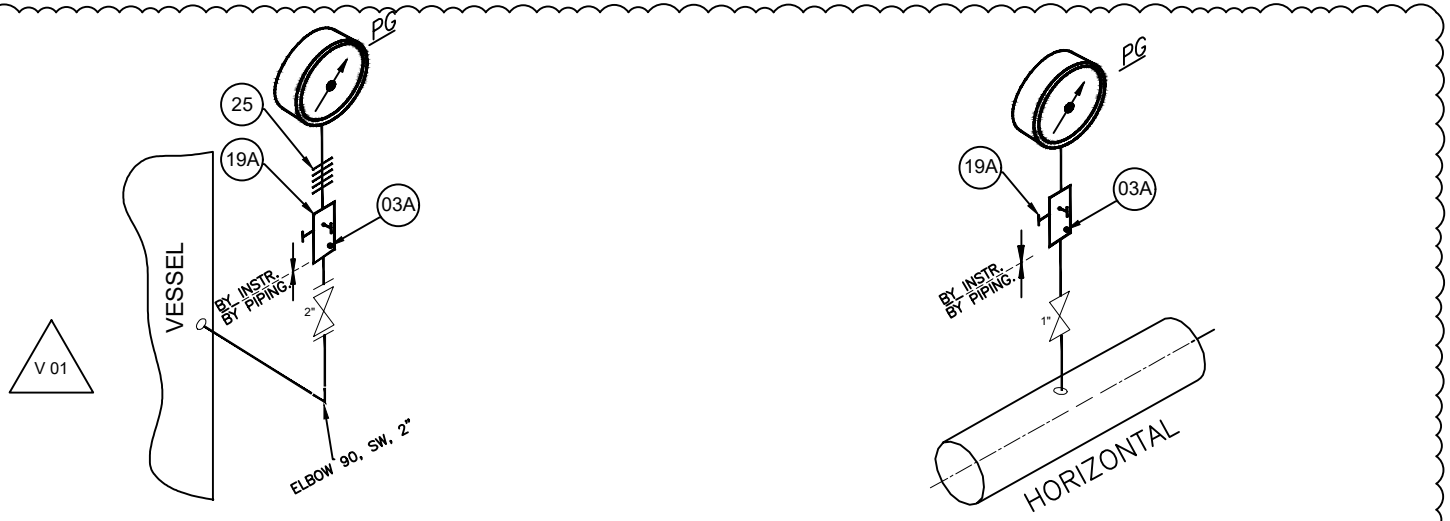

Tag Number	Quantity	Remark
PG-2194A/B/C	3	FLUID: GAS

Tag Number	Quantity	Remark
PG-2205A/B/C	3	FLUID: GAS

Sour Gas
HY Reply: Noted.

ITEM	QTY	SIZE OR CONNECTION	DESCRIPTION	MATERIAL	TOTAL QTY.	REMARK
19A	1	2x1/2"NPTF + 1/4"	MANIFOLD,3 WAY 2 VALVE	AISI 316SS	6	NACE MATERIAL
25	1	1/2" NPTM x 1/2" NPTM	COOLING ELEMENT	AISI 316SS	3	NACE MATERIAL
03A	1	1/4"NPTM	HEX HEAD PLUG	AISI 316SS	6	NACE MATERIAL

REFERENCE DRAWINGS	DWG. NUMBER
P&I DIAGRAM	BK-GCS-HY-120-PR-PI-0001-V04
INSTRUMENT DATASHEET/ CERTIFICATES	BK-GCS-HY-120-IN-DS-0001-V02

Note :

Legend :

REV.	DATE	P.O.I.	PREP.	CHK.	APP.	AUT.
V01	MAY.2024	IFR	HAVAYAR Co.	M.FAKHARIAN	M.SADEGHIAN	
V00	APR.2024	IFR	HAVAYAR Co.	M.FAKHARIAN	A.M.MOHSENI	

REV.	DESCRIPTION	BY	DATE	BY	DATE
		CHECKED		REV. APPR.	

PROJECT NAME: BINAK OILFIELD DEVELOPMENT SURFACE WORK PACKAGES

PROJECT NO.: ----

EPC CONTRACTOR: BIRGAN ENERGY - BIRGAN & INSPECTION COMPANIES

EPC/EPD CONTRACTOR: PETRO IRAN DEVELOPMENT COMPANY

THE GENERAL AND ALL COPIES OF THIS DRAWING TOGETHER WITH THE COPYRIGHT THEREIN ARE THE SOLE PROPERTY OF N.I.S.O.C./ FIELDS

BINAK OILFIELD DEVELOPMENT SURFACE WORK PACKAGES

DRAWING TITLE: HOOK UP DRAWING

DATE	SCALE	DRAWING BY	CHECKED BY	PROJECT ENG.

NO CONSTRUCTION PERMITTED UNLESS DRAWING APPROVED

APPROVED FOR CONSTRUCTION BY: DATE:

SCALE	SIZE	DRAWING NO.	SHEET NO.	REV.
N.T.S.C.	A3	BK-GCS-HY-120-IN-DW-0007	04 OF 16	V01

BUDGET REF. LOCATION SIZE CLASS SERIAL NO. SHEET REVISION

Software Autocad File No: BK-GCS-HY-120-IN-DW-0007-01.dwg

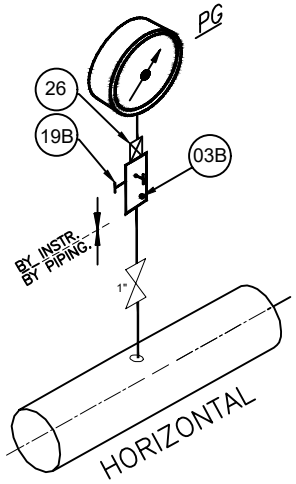

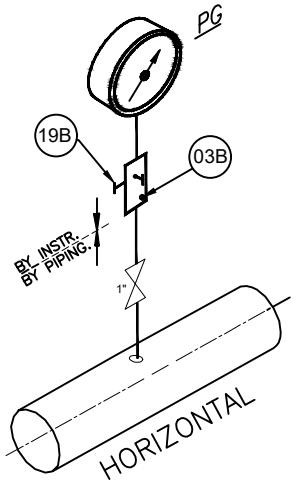

Tag Number	Quantity	Remark
PG-2206A/B/C	3	FLUID: WATER
PG-2207A/B/C	3	FLUID: WATER

Tag Number	Quantity	Remark
PG-2200A/B/C	3	FLUID: AIR
PG-2201A/B/C	3	FLUID: OIL
PG-2202A/B/C	3	FLUID: OIL
PG-2204A/B/C	3	FLUID: OIL
PG-2208A/B/C	3	FLUID: WATER

V 01

ITEM	QTY	SIZE OR CONNECTION	DESCRIPTION	MATERIAL	TOTAL QTY.	REMARK
19B	1	2x1/2"NPTF + 1/4"	MANIFOLD,3 WAY 2 VALVE	AISI 316SS	18	-
26	1	1/2"NPTF x 1/2"NPTM	SNUBER	AISI 316SS	6	-
03B	1	1/4"NPTM	HEX HEAD PLUG	AISI 316SS	21	-

REFERENCE DRAWINGS

	DWG. NUMBER
P&I DIAGRAM	BK-GCS-HY-120-PR-PI-0001-V04
INSTRUMENT DATASHEET/ CERTIFICATES	BK-GCS-HY-120-IN-DS-0001-V02

Note :

Legend :

REV.	DATE	P.O.I.	PREP.	CHK.	APP.	AUT.
V01	MAY.2024	IFR	HAVAYAR Co.	M.FAKHARIAN	M.SADEGHIAN	
V00	APR.2024	IFR	HAVAYAR Co.	M.FAKHARIAN	A.M.MOHSENI	

REV.	DESCRIPTION	BY	DATE	BY	DATE
		CHECKED		REV. APPR.	

PROJECT NAME: BINAK OILFIELD DEVELOPMENT SURFACE WORK PACKAGES

PROJECT NO.: ----

EPC CONTRACTOR: HIRGAN ENERGY – DESIGN & INSPECTION COMPANIES

EPC/EPD CONTRACTOR: PETROIRAN DEVELOPMENT COMPANY PEDCO

THE ORIGINAL AND ALL COPIES OF THIS DRAWING TOGETHER WITH THE COPYRIGHT THEREIN ARE THE SOLE PROPERTY OF N.I.S.O.C./ FIELDS

BINAK OILFIELD DEVELOPMENT SURFACE WORK PACKAGES

DATE | SCALE | DRAWING BY | CHECKED BY | PROJECT ENG.

NO CONSTRUCTION PERMITTED UNLESS DRAWING APPROVED

APPROVED FOR CONSTRUCTION BY: DATE:

BUDGET REF. | LOCATION | SEQ. CLASS | SERIAL NO. | SHEET | REVISION

DRAWING TITLE: HOOK UP DRAWING

SCALE	SIZE	DRAWING NO.	SHEET NO.	REV.
N.T.S.C.	A3	BK-GCS-HY-120-IN-DW-0007	05 OF 16	V01

File No: BK-GCS-HY-120-IN-DW-0007-01.dwg

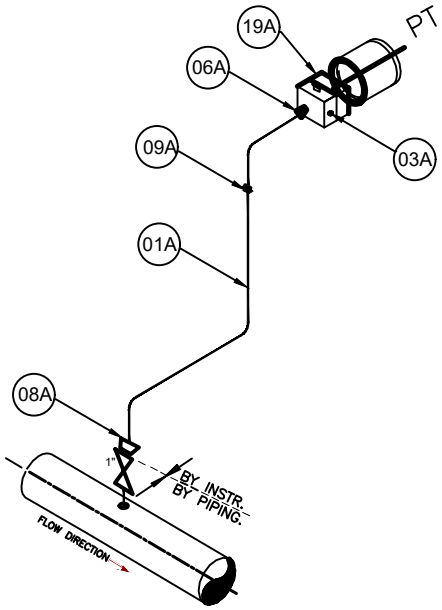

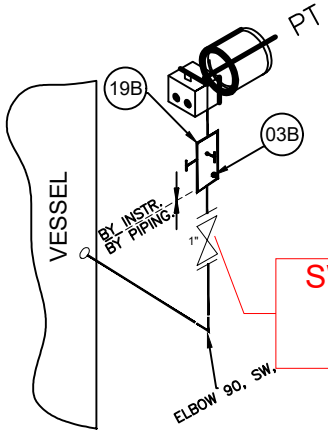

شیر 1 اینچ بصورت SW
نشان داده شود نه فلنجي.
.HY Reply: Noted

Tag Number	Quantity	Remark
PT-2123A/B/C	3	FLUID: GAS
PT-2124A/B/C	3	FLUID: GAS
PT-2133A/B/C	3	FLUID: GAS
PT-2132A/B/C	3	FLUID: GAS

Sour Gas
HY Reply: Noted.

Tag Number	Quantity	Remark
PT-2200A/B/C	3	FLUID: OIL

V 01

ITEM	QTY	SIZE OR CONNECTION	DESCRIPTION	MATERIAL	TOTAL QTY.	REMARK
19A	1	2x1/2"NPTF + 1/4"	MANIFOLD,3 WAY 2 VALVE	AISI 316SS	12	NACE MATERIAL
08A	1	1/2" NPTFx 1/2" O.D	DOUBLE FERRULE COMPRESSION TYPE FEMALE CONNECTOR	AISI 316SS	12	NACE MATERIAL
01A	4	1/2" O.D	TUBING, SEAMLESS, WALL THICKNESS 0.065"	AISI 316SS	48m	NACE MATERIAL
09A	1	1/2" O.D	STRAIGHT UNION COMPRESSION TYPE DOUBLE FERRULE	AISI 316SS	12	NACE MATERIAL
06A	1	1/2" NPTM x 1/2" O.D	DOUBLE FERRULE COMPRESSION TYPE MALE CONNECTOR	AISI 316SS	12	NACE MATERIAL
03A	1	1/4"NPTM	HEX HEAD PLUG	AISI 316SS	12	NACE MATERIAL
19B	1	2x1/2"NPTF + 1/4"	MANIFOLD,3 WAY 2 VALVE	AISI 316SS	3	-
03B	1	1/4"NPTM	HEX HEAD PLUG	AISI 316SS	12	-

REFERENCE DRAWINGS	DWG. NUMBER
P&I DIAGRAM	BK-GCS-HY-120-PR-PI-0001-V04
INSTRUMENT DATASHEET/ CERTIFICATES	BK-GCS-HY-120-IN-DS-0001-V02

Note :

Legend :

REV.	DATE	P.O.I.	PREP.	CHK.	APP.	AUT.
V01	MAY.2024	IFR	HAVAYAR Co	M.FAKHARIAN	M.SADEGHIAN	
V00	APR.2024	IFR	HAVAYAR Co	M.FAKHARIAN	A.M.MOHSENI	

REV.	DESCRIPTION	BY	DATE	BY	DATE
		CHECKED		REV. APPR.	

PROJECT NAME: BINAK OILFIELD DEVELOPMENT SURFACE WORK PACKAGES

PROJECT NO.: ----

EPC CONTRACTOR: SIRGAN ENERGY – BINGEN & INSPECTION COMPANIES

EPC/EPD CONTRACTOR: PETROIRAN DEVELOPMENT COMPANY PEDCO

DRAWING TITLE: HOOK UP DRAWING

SCALE	SIZE	DRAWING NO.	SHEET NO.	REV.
N.T.S.C.	A3	BK-GCS-HY-120-IN-DW-0007	06 OF 16	V01

THE ORIGINAL AND ALL COPIES OF THIS DRAWING TOGETHER WITH THE COPYRIGHT THEREIN ARE THE SOLE PROPERTY OF N.I.S.O.C./ FIELDS

BINAK OILFIELD DEVELOPMENT SURFACE WORK PACKAGES

DATE	SCALE	DRAWING BY	CHECKED BY	PROJECT ENG.

NO CONSTRUCTION PERMITTED UNLESS DRAWING APPROVED

APPROVED FOR CONSTRUCTION BY: DATE:

BUDGET REF.	LOCATION	SIZE	CLASS	SERIAL NO.	SHEET	REVISION

File No: BK-GCS-HY-120-IN-DW-0007-01.dwg

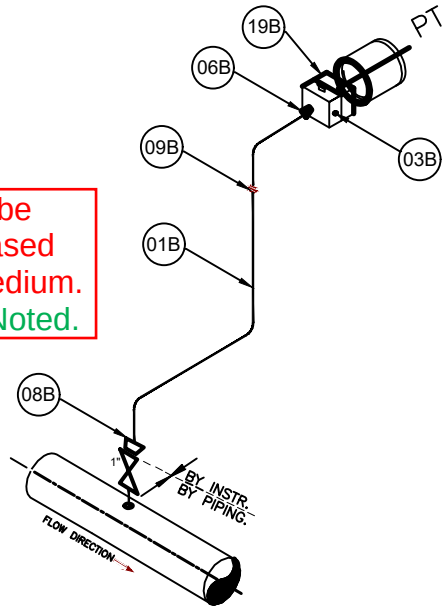

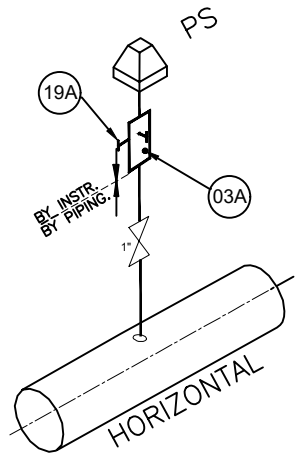

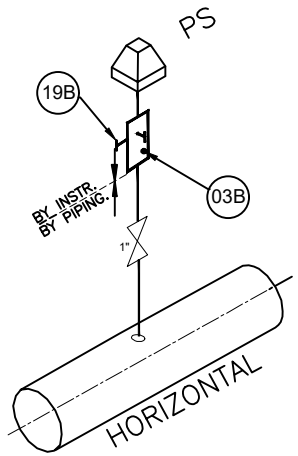

Hook up to be specified based on liquid medium.
HY Reply: Noted.

Tag Number	Quantity	Remark
PS-2133A/B/C	3	FLUID: GAS

Tag Number	Quantity	Remark
PS-2204A/B/C	3	FLUID: OIL
PS-2220A/B/C	3	FLUID: WATER

Tag Number	Quantity	Remark
PT-2201A/B/C	3	FLUID:AIR
PT-2204A/B/C	3	FLUID: GAS
PT-2210A/B/C	3	FLUID: OIL
PT-2211A/B/C	3	FLUID: GAS
PT-2220A/B/C	3	FLUID: WATER
PT-2221A/B/C	3	FLUID: WATER

V 01

Sour Gas, NACE Requirement shall be considered.
HY Reply: Noted.

ITEM	QTY	SIZE OR CONNECTION	DESCRIPTION	MATERIAL	TOTAL QTY.	REMARK
19A	1	2x1/2"NPTF + 1/4"	MANIFOLD,3 WAY 2 VALVE	AISI 316SS	3	NACE MATERIAL
03A	1	1/4"NPTM	HEX HEAD PLUG	AISI 316SS	3	NACE MATERIAL
19B	1	2x1/2"NPTF + 1/4"	MANIFOLD,3 WAY 2 VALVE	AISI 316SS	24	-
08B	1	1/2" NPTFx 1/2" O.D	DOUBLE FERRULE COMPRESSION TYPE FEMALE CONNECTOR	AISI 316SS	18	-
01B	4	1/2" O.D	TUBING, SEAMLESS, WALL THICKNESS 0.065"	AISI 316SS	72m	-
09B	1	1/2" O.D	STRAIGHT UNION COMPRESSION TYPE DOUBLE FERRULE	AISI 316SS	18	-
06B	1	1/2" NPTM x 1/2" O.D	DOUBLE FERRULE COMPRESSION TYPE MALE CONNECTOR	AISI 316SS	18	-
03B	1	1/4"NPTM	HEX HEAD PLUG	AISI 316SS	21	

REFERENCE DRAWINGS	DWG. NUMBER
P&I DIAGRAM	BK-GCS-HY-120-PR-PI-0001-V04
INSTRUMENT DATASHEET/ CERTIFICATES	BK-GCS-HY-120-IN-DS-0001-V02

Note :

Legend :

REV.	DATE	P.O.I.	PREP.	CHK.	APP.	AUT.
V01	MAY.2024	IFR	HAVAYAR Co	M.FAKHARIAN	M.SADEGHIAN	
V00	APR.2024	IFR	HAVAYAR Co	M.FAKHARIAN	A.M.MOHSENI	

REV.	DESCRIPTION	BY	DATE	BY	DATE
		CHECKED		REV. APPR.	

PROJECT NAME: BINAK OILFIELD DEVELOPMENT SURFACE WORK PACKAGES

PROJECT NO.: ----

EPC CONTRACTOR: BIRGAN ENERGY - DESIGN & INSPECTION COMPANIES

EPC/EPD CONTRACTOR: PETROIRAN DEVELOPMENT COMPANY PEDCO

THE ORIGINAL AND ALL COPIES OF THIS DRAWING TOGETHER WITH THE COPYRIGHT THEREIN ARE THE SOLE PROPERTY OF N.I.S.O.C./ FIELDS

BINAK OILFIELD DEVELOPMENT SURFACE WORK PACKAGES

DATE	SCALE	DRAWING BY	CHECKED BY	PROJECT ENG.

NO CONSTRUCTION PERMITTED UNLESS DRAWING APPROVED

APPROVED FOR CONSTRUCTION BY: DATE:

DRAWING TITLE: HOOK UP DRAWING

SCALE	SIZE	DRAWING NO.	SHEET NO.	REV.
N.T.S.C.	A3	BK-GCS-HY-120-IN-DW-0007	07 OF 10	V01

BUDGET REF.	LOCATION	SIZE	CLASS	SERIAL NO.	SHEET	REVISION

File No: BK-GCS-HY-120-IN-DW-0007-01.dwg

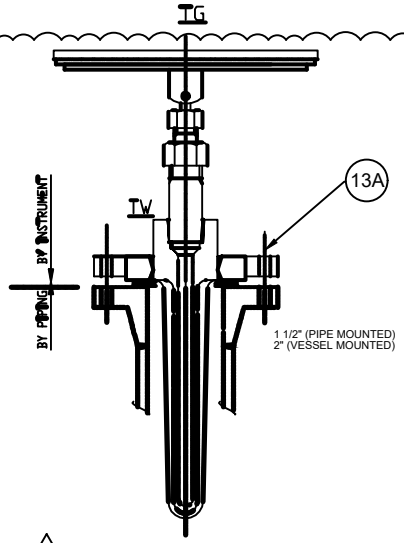

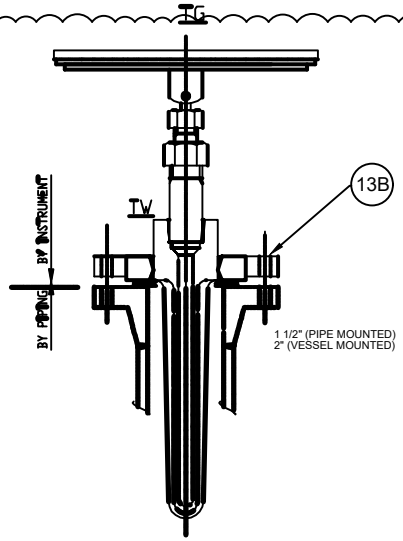

V 01

Tag Number	Quantity	U Length(m)	REMARK
TG-2210A/B/C	3	150	PIPE MOUNTED / FLUID: GAS
TG-2211A/B/C	3	150	PIPE MOUNTED / FLUID: GAS
TG-2190A/B/C	3	400	VESSEL MOUNTED / FLUID: GAS
TG-2193A/B/C	3	400	VESSEL MOUNTED / FLUID: GAS

Sour Gas
HY Reply: Noted.

Tag Number	Quantity	U Length(m)	REMARK
TG-2204A/B/C	3	150	PIPE MOUNTED / FLUID: WATER
TG-2205A/B/C	3	150	PIPE MOUNTED / FLUID: WATER
TG-2206A/B/C	3	150	PIPE MOUNTED / FLUID: WATER
TG-2221A/B/C	3	150	PIPE MOUNTED / FLUID: WATER
TG-2215A/B/C	3	150	PIPE MOUNTED / FLUID: WATER
TG-2216A/B/C	3	150	PIPE MOUNTED / FLUID: WATER
TG-2212A/B/C	3	150	PIPE MOUNTED / FLUID: WATER
TG-2213A/B/C	3	150	PIPE MOUNTED / FLUID: WATER
TG-2214A/B/C	3	150	PIPE MOUNTED / FLUID: WATER
TG-2217A/B/C	3	400	VESSEL MOUNTED / FLUID: GAS

Sour Gas, NACE Requirement shall be specified.
HY Reply: Noted.

ITEM	QTY	SIZE OR CONNECTION	DESCRIPTION	MATERIAL	TOTAL QTY.	REMARK
13A	1	1/2"NPTF x1/2"NPTF	THERMOWELL - #300 - CON:1/2 NPT - U: 150 mm	AISI 316SS	6	NACE MATERIAL
13A	1	1/2"NPTF x1/2"NPTF	THERMOWELL - #300 - CON:1/2 NPT - U: 400 mm	AISI 316SS	6	NACE MATERIAL
13B	1	1/2"NPTF x1/2"NPTF	THERMOWELL - #300 - CON:1/2 NPT - U: 150 mm	AISI 316SS	27	-
13B	1	1/2"NPTF x1/2"NPTF	THERMOWELL - #300 - CON:1/2 NPT - U: 400 mm	AISI 316SS	3	-

REFERENCE DRAWINGS	DWG. NUMBER
P&I DIAGRAM	BK-GCS-HY-120-PR-PI-0001-V04
INSTRUMENT DATASHEET/ CERTIFICATES	BK-GCS-HY-120-IN-DS-0001-V02

Note :

Legend :

REV.	DATE	P.O.I.	PREP.	CHK.	APP.	AUT.
V01	MAY.2024	IFR	HAVAYAR Co	M.FAKHARIAN	M.SADEGHIAN	
V00	APR.2024	IFR	HAVAYAR Co	M.FAKHARIAN	A.M.MOHSENI	

REV.	DESCRIPTION	CHECKED BY	CHECKED DATE	REV. APPR. BY	REV. APPR. DATE

PROJECT NAME: BINAK OILFIELD DEVELOPMENT SURFACE WORK PACKAGES

PROJECT NO.: ----

EPC CONTRACTOR: BINGAN ENERGY — BINGAN ENERGY & INSPECTION COMPANIES

EPC/EPD CONTRACTOR: PETROIRAN DEVELOPMENT COMPANY (PEDCO)

THE ORIGINAL AND ALL COPIES OF THIS DRAWING TOGETHER WITH THE COPYRIGHT THEREIN ARE THE SOLE PROPERTY OF N.I.S.O.C./ FIELDS

BINAK OILFIELD DEVELOPMENT SURFACE WORK PACKAGES

DATE | SCALE | DRAWING BY | CHECKED BY | PROJECT ENG.

DRAWING TITLE: HOOK UP DRAWING

SCALE	SIZE	DRAWING NO.	SHEET NO.	REV.
N.T.S.C.	A3	BK-GCS-HY-120-IN-DW-0007	08 OF 10	V01

NO CONSTRUCTION PERMITTED UNLESS DRAWING APPROVED

APPROVED FOR CONSTRUCTION BY: DATE:

BUDGET REF. | LOCATION | SIZE | CLASS | SERIAL NO. | SHEET | REVISION

Software: Autocad File No: BK-GCS-HY-120-IN-DW-0007-01.dwg

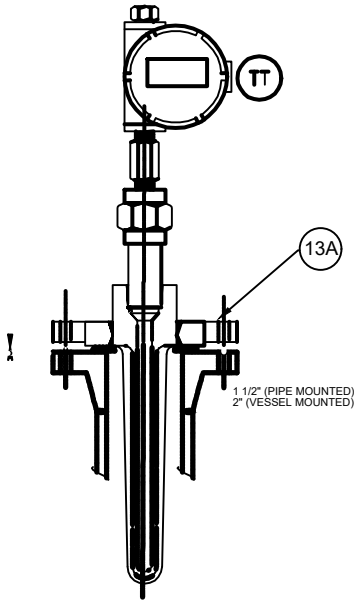

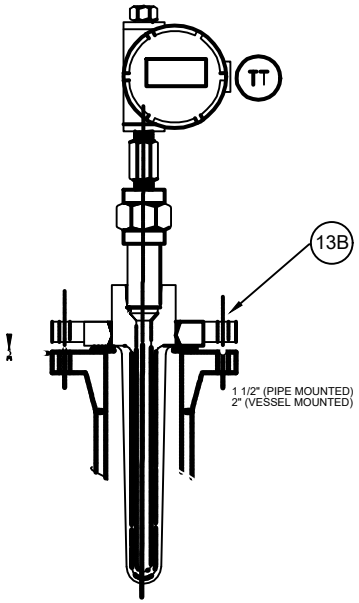

V 01

Tag Number	Quantity	U Length(m)	REMARK
TT-2122A/B/C	3	250	FLUID: GAS
TT-2123A/B/C	3	250	FLUID: GAS
TT-2132A/B/C	3	200	FLUID: GAS
TT-2133A/B/C	3	200	FLUID: GAS
TT-2191A/B/C	3	400	FLUID: GAS
TT-2194A/B/C	3	400	FLUID: GAS

Sour Gas
HY Reply: Noted.

Tag Number	Quantity	U Length(m)	REMARK
TT-2204A/B/C	3	150	FLUID: OIL
TT-2203A/B/C	3	200	FLUID: OIL
TT-2213A/B/C	3	Hold	FLUID: WATER
TT-2214A/B/C	3	N/A	-
TT-2215A/B/C	3	N/A	-
TT-2216A/B/C	3	N/A	-
TT-2217A/B/C	3	N/A	-
TT-2218A/B/C	3	N/A	-
TT-2219A/B/C	3	N/A	-
TT-2220A/B/C	3	N/A	-

ITEM	QTY	SIZE OR CONNECTION	DESCRIPTION	MATERIAL	TOTAL QTY.	REMARK
13A	1	1/2"NPTF x1/2"NPTF	THERMOWELL - #300 - CON:1/2 NPT - U: 200 mm	AISI 316SS	6	NACE MATERIAL
13A	1	1/2"NPTF x1/2"NPTF	THERMOWELL - #300 - CON:1/2 NPT - U: 250 mm	AISI 316SS	6	NACE MATERIAL
13A	1	1/2"NPTF x1/2"NPTF	THERMOWELL - #300 - CON:1/2 NPT - U: 400 mm	AISI 316SS	6	NACE MATERIAL
13B	1	1/2"NPTF x1/2"NPTF	THERMOWELL - #300 - CON:1/2 NPT - U: 150 mm	AISI 316SS	3	-
13B	1	1/2"NPTF x1/2"NPTF	THERMOWELL - #300 - CON:1/2 NPT - U: 200 mm	AISI 316SS	3	-

REFERENCE DRAWINGS	DWG. NUMBER
P&I DIAGRAM	BK-GCS-HY-120-PR-PI-0001-V04
INSTRUMENT DATASHEET/ CERTIFICATES	BK-GCS-HY-120-IN-DS-0001-V02

Note :

Legend :

REV.	DATE	P.O.I.	PREP.	CHK.	APP.	AUT.
V01	MAY.2024	IFR	HAVAYAR Co	M.FAKHARIAN	M.SADEGHIAN	
V00	APR.2024	IFR	HAVAYAR Co	M.FAKHARIAN	A.M.MOHSENI	

PROJECT NAME: BINAK OILFIELD DEVELOPMENT SURFACE WORK PACKAGES

PROJECT NO.: ----

EPC CONTRACTOR: BIRGAN ENERGY - DESIGN & INSPECTION COMPANIES

EPC/EPD CONTRACTOR: PEDCO — PETROIRAN DEVELOPMENT COMPANY

DRAWING TITLE: HOOK UP DRAWING

SCALE	SIZE	DRAWING NO.	SHEET NO.	REV.
N.T.S.C.	A3	BK-GCS-HY-120-IN-DW-0007	09 OF 16	V01

REV.	DESCRIPTION	BY	DATE	BY	DATE
		CHECKED		REV. APPR.	

THE ORIGINAL AND ALL COPIES OF THIS DRAWING TOGETHER WITH THE COPYRIGHT THEREIN ARE THE SOLE PROPERTY OF N.I.S.O.C./ FIELDS

BINAK OILFIELD DEVELOPMENT SURFACE WORK PACKAGES

DATE	SCALE	DRAWING BY	CHECKED BY	PROJECT ENG.

NO CONSTRUCTION PERMITTED UNLESS DRAWING APPROVED

APPROVED FOR CONSTRUCTION BY: DATE:

BUDGET REF.	LOCATION	SIZE	CLASS	SERIAL NO.	SHEET	REVISION

Software Autocad File Ex BK-GCS-HY-120-IN-DW-0007-01.dwg

Title?
HY Reply:
Noted.

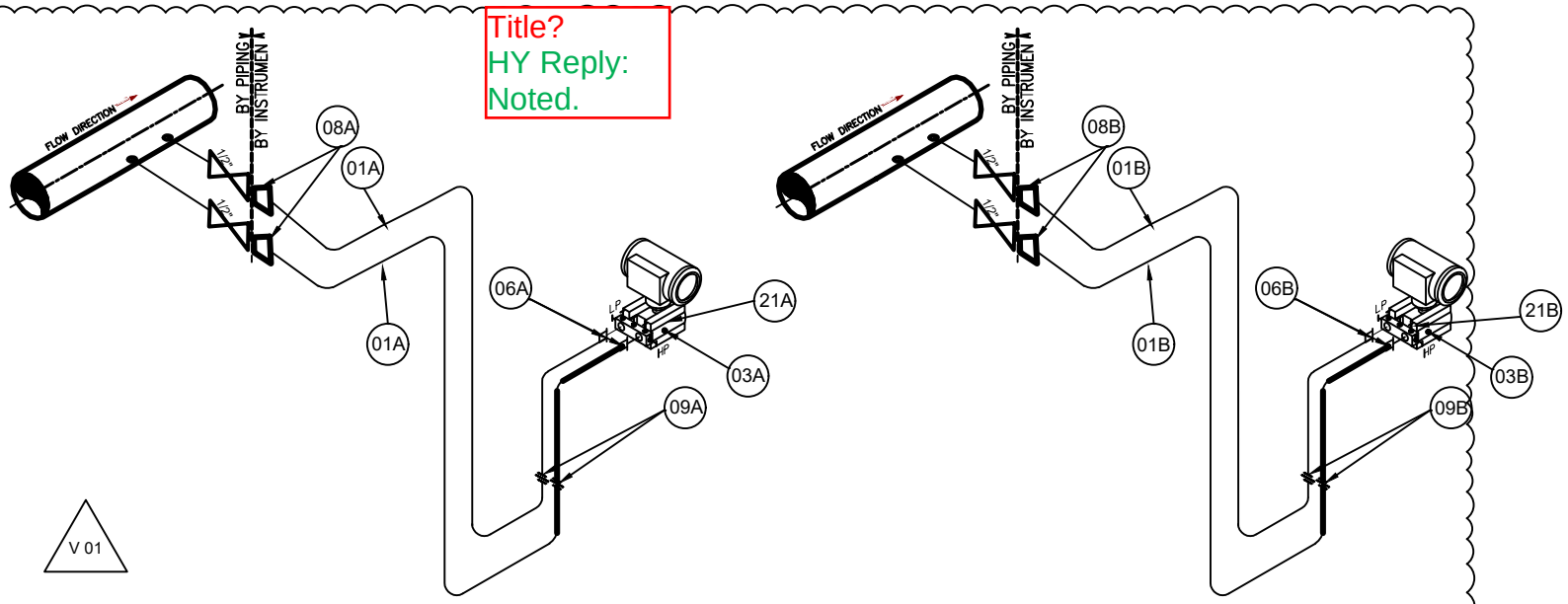

Tag Number	Quantity	REMARK
PDT-2122A/B/C	3	FLUID: GAS
PDT-2132A/B/C	3	FLUID: GAS

Sour Gas
HY Reply: Noted.

Tag Number	Quantity	REMARK
PDT-2204A/B/C	3	FLUID: OIL

ITEM	QTY	SIZE OR CONNECTION	DESCRIPTION	MATERIAL	TOTAL QTY.	REMARK
21A	1	2x1/2"NPTF + 1/4"	MANIFOLD,5 WAY 3 VALVE	AISI 316SS	6	NACE MATERTIAL
08A	2	1/2" NPTFx 1/2" O.D	DOUBLE FERRULE COMPRESSION TYPE FEMALE CONNECTOR	AISI 316SS	12	NACE MATERTIAL
01A	8	1/2" O.D	TUBING, SEAMLESS, WALL THICKNESS 0.065"	AISI 316SS	48	NACE MATERTIAL
09A	2	1/2" O.D	STRAIGHT UNION COMPRESSION TYPE DOUBLE FERRULE	AISI 316SS	12	NACE MATERTIAL
06A	2	1/2" NPTM x 1/2" O.D	DOUBLE FERRULE COMPRESSION TYPE MALE CONNECTOR	AISI 316SS	12	NACE MATERTIAL
03A	1	1/4"NPTM	HEX HEAD PLUG	AISI 316SS	6	NACE MATERIAL
21B	1	2x1/2"NPTF + 1/4"	MANIFOLD,5 WAY 3 VALVE	AISI 316SS	3	-
08B	2	1/2" NPTFx 1/2" O.D	DOUBLE FERRULE COMPRESSION TYPE FEMALE CONNECTOR	AISI 316SS	6	-
01B	8	1/2" O.D	TUBING, SEAMLESS, WALL THICKNESS 0.065"	AISI 316SS	24	-
09B	2	1/2" O.D	STRAIGHT UNION COMPRESSION TYPE DOUBLE FERRULE	AISI 316SS	6	-
06B	2	1/2" NPTM x 1/2" O.D	DOUBLE FERRULE COMPRESSION TYPE MALE CONNECTOR	AISI 316SS	6	-
03B	1	1/4"NPTM	HEX HEAD PLUG	AISI 316SS	3	-

REFERENCE DRAWINGS	DWG. NUMBER
P&I DIAGRAM	BK-GCS-HY-120-PR-PI-0001-V04
INSTRUMENT DATASHEET/ CERTIFICATES	BK-GCS-HY-120-IN-DS-0001-V02

Note :

Legend :

REV.	DATE	P.O.I.	PREP.	CHK.	APP.	AUT.
V01	MAY 2024	IFR	HAVAYAR Co	M.FAKHARIAN	M.SADEGHIAN	
V00	APR.2024	IFR	HAVAYAR Co	M.FAKHARIAN	A.M.MOHSENI	

REV.	DESCRIPTION	BY	DATE	BY	DATE
		CHECKED		REV. APPR.	

PROJECT NAME: BINAK OILFIELD DEVELOPMENT SURFACE WORK PACKAGES

PROJECT NO.: ----

EPC CONTRACTOR: HIRGAN ENERGY – HIRGAN & INSPECTION COMPANIES

EPC/EPD CONTRACTOR: PETROIRAN DEVELOPMENT COMPANY PEDCO

THE ORIGINAL AND ALL COPIES OF THIS DRAWING TOGETHER WITH THE COPYRIGHT THEREIN ARE THE SOLE PROPERTY OF N.I.S.O.C./ FIELDS

BINAK OILFIELD DEVELOPMENT SURFACE WORK PACKAGES

DATE | SCALE | DRAWING BY | CHECKED BY | PROJECT ENG.

NO CONSTRUCTION PERMITTED UNLESS DRAWING APPROVED

APPROVED FOR CONSTRUCTION BY: DATE:

BUDGET REF. LOCATION SIZE CLASS SERIAL NO. SHEET REVISION

DRAWING TITLE: HOOK UP DRAWING

SCALE	SIZE	DRAWING NO.	SHEET NO.	REV.
N.T.S.C.	A3	BK-GCS-HY-120-IN-DW-0007	10 OF 10	V01

File No: BK-GCS-HY-120-IN-DW-0007-01.dwg

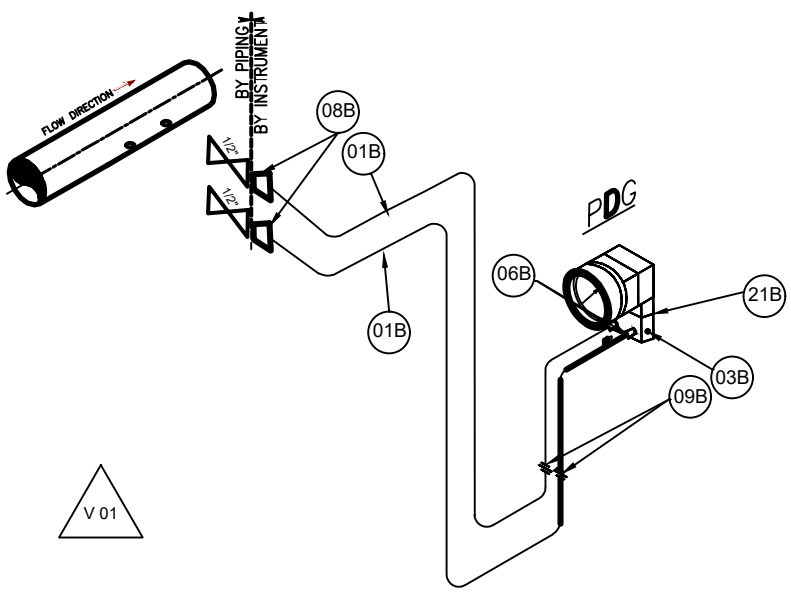

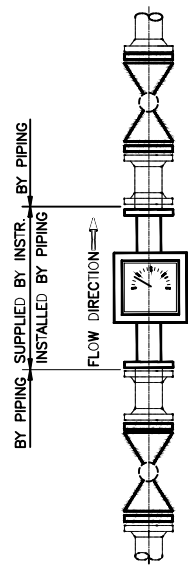

Tag Number	Quantity	REMARK
PDG-2200A/B/C	3	FLUID: OIL
PDG-2204A/B/C	3	FLUID: OIL
PDG-2205A/B/C	3	FLUID: GAS
PDG-2206A/B/C	3	FLUID:WATER

Sour Gas, NACE Requirement?
HY Reply: Noted.

Tag Number	Quantity	REMARK
FI-2200A/B/C	3	FLUID: GAS(N2)
FI-2201A/B/C	3	FLUID: GAS(N2)
FI-2202A/B/C	3	FLUID: GAS(N2)
FI-2203A/B/C	3	FLUID: GAS(N2)

ITEM	QTY	SIZE OR CONNECTION	DESCRIPTION	MATERIAL	TOTAL QTY.	REMARK
21B	1	2x1/2"NPTF + 1/4"	MANIFOLD,5 WAY 3 VALVE	AISI 316SS	12	-
08B	2	1/2" NPTFx 1/2" O.D	DOUBLE FERRULE COMPRESSION TYPE FEMALE CONNECTOR	AISI 316SS	24	-
01B	8	1/2" O.D	TUBING, SEAMLESS, WALL THICKNESS 0.065"	AISI 316SS	96	-
09B	2	1/2" O.D	STRAIGHT UNION COMPRESSION TYPE DOUBLE FERRULE	AISI 316SS	24	-
06B	2	1/2" NPTM x 1/2" O.D	DOUBLE FERRULE COMPRESSION TYPE MALE CONNECTOR	AISI 316SS	24	-
03B	1	1/4"NPTM	HEX HEAD PLUG	AISI 316SS	12	-

REFERENCE DRAWINGS	DWG. NUMBER
P&I DIAGRAM	BK-GCS-HY-120-PR-PI-0001-V04
INSTRUMENT DATASHEET/ CERTIFICATES	BK-GCS-HY-120-IN-DS-0001-V02

Note :

Legend :

REV.	DATE	P.O.I.	PREP.	CHK.	APP.	AUT.
V01	MAY.2024	IFR	HAVAYAR Co	M.FAKHARIAN	M.SADEGHIAN	
V00	APR.2024	IFR	HAVAYAR Co	M.FAKHARIAN	A.M.MOHSENI	

REV.	DESCRIPTION	BY	DATE	BY	DATE
		CHECKED		REV. APPR.	

PROJECT NAME: BINAK OILFIELD DEVELOPMENT SURFACE WORK PACKAGES

PROJECT NO.: ----

EPC CONTRACTOR: BIRGAN ENERGY - DESIGN & INSPECTION COMPANIES

EPC/EPD CONTRACTOR: PETROIRAN DEVELOPMENT COMPANY PEDCO

THE ORIGINAL AND ALL COPIES OF THIS DRAWING TOGETHER WITH THE COPYRIGHT THEREIN ARE THE SOLE PROPERTY OF N.I.S.O.C./ FIELDS

BINAK OILFIELD DEVELOPMENT SURFACE WORK PACKAGES

DATE	SCALE	DRAWING BY	CHECKED BY	PROJECT ENG.

DRAWING TITLE: HOOK UP DRAWING

NO CONSTRUCTION PERMITTED UNLESS DRAWING APPROVED

APPROVED FOR CONSTRUCTION BY: DATE:

SCALE	SIZE	DRAWING NO.	SHEET NO.	REV.
N.T.S.C.	A3	BK-GCS-HY-120-N-DW-0007	11 OF 16	V01

BUDGET REF.	LOCATION	SIZE	CLASS	SERIAL NO.	SHEET	REVISION

File No BK-GCS-HY-120-N-DW-0007-01.dwg

Title?
HY Reply: Noted.

Flow Transmitter
HY Reply: Noted.

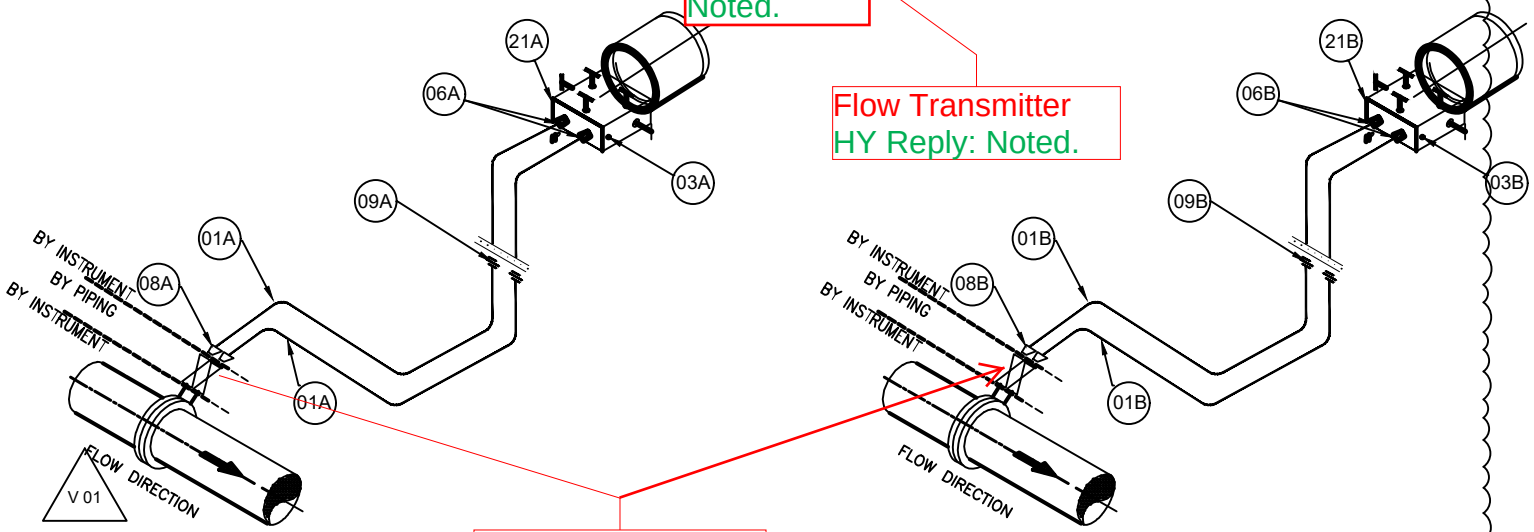

نوع و سایز شیرها و اتصال آنها مشخص گردد
HY Reply: Noted.

Tag Number	Quantity	REMARK
FT-2121A/B/C	3	FLUID: GAS
FT-2131A/B/C	3	FLUID: GAS

Sour Gas
HY Reply: Noted.

Tag Number	Quantity	REMARK
FT-2206A/B/C	3	FLUID: WATER

ITEM	QTY	SIZE OR CO	DESCRIPTION	MATERIAL	TOTAL QTY.	REMARK
21A	1	2x1/2"NP	MANIFOLD,5 WAY 3 VALVE	AISI 316SS	6	NACE MATERIAL
08A	2	1/2" NPTFx 1/2" O.D	DOUBLE FERRULE COMPRESSION TYPE FEMALE CONNECTOR	AISI 316SS	12	NACE MATERIAL
01A	8	1/2" O.D	TUBING, SEAMLESS, WALL THICKNESS 0.065"	AISI 316SS	48	NACE MATERIAL
09A	2	1/2" O.D	STRAIGHT UNION COMPRESSION TYPE DOUBLE FERRULE	AISI 316SS	12	NACE MATERIAL
06A	2	1/2" NPTM x 1/2" O.D	DOUBLE FERRULE COMPRESSION TYPE MALE CONNECTOR	AISI 316SS	12	NACE MATERIAL
03A	1	1/4"NPTM	HEX HEAD PLUG	AISI 316SS	6	NACE MATERIAL
21B	1	2x1/2"NPTF + 1/4"	MANIFOLD,5 WAY 3 VALVE	AISI 316SS	3	-
08B	2	1/2" NPTFx 1/2" O.D	DOUBLE FERRULE COMPRESSION TYPE FEMALE CONNECTOR	AISI 316SS	6	-
01B	8	1/2" O.D	TUBING, SEAMLESS, WALL THICKNESS 0.065"	AISI 316SS	24	-
09B	2	1/2" O.D	STRAIGHT UNION COMPRESSION TYPE DOUBLE FERRULE	AISI 316SS	6	-
06B	2	1/2" NPTM x 1/2" O.D	DOUBLE FERRULE COMPRESSION TYPE MALE CONNECTOR	AISI 316SS	6	-
03B	1	1/4"NPTM	HEX HEAD PLUG	AISI 316SS	3	-

REFERENCE DRAWINGS	DWG. NUMBER
P&I DIAGRAM	BK-GCS-HY-120-PR-PI-0001-V04
INSTRUMENT DATASHEET/ CERTIFICATES	BK-GCS-HY-120-IN-DS-0001-V02

Note :

Legend :

REV.	DATE	F.O.I.	PREP.	CHK.	APP.	AUT.
V01	MAY.2024	IFR	HAVAYAR Co	M.FAKHARIAN	M.SADEGHIAN	
V00	APR.2024	IFR	HAVAYAR Co	M.FAKHARIAN	A.M.MOHSENI	

REV.	DESCRIPTION	BY	DATE	BY	DATE
		CHECKED		REV. APPR.	

PROJECT NAME: BINAK OILFIELD DEVELOPMENT SURFACE WORK PACKAGES

PROJECT NO.: ---

EPC CONTRACTOR: HIRGAN ENERGY – DESIGN & INSPECTION COMPANIES

EPC/EPD CONTRACTOR: PETROIRAN DEVELOPMENT COMPANY PEDCO

THE ORIGINAL AND ALL COPIES OF THIS DRAWING TOGETHER WITH THE COPYRIGHT THEREIN ARE THE SOLE PROPERTY OF N.I.S.O.C./ FIELDS

BINAK OILFIELD DEVELOPMENT SURFACE WORK PACKAGES

DATE	SCALE	DRAWING BY	CHECKED BY	PROJECT ENG.

DRAWING TITLE: HOOK UP DRAWING

NO CONSTRUCTION PERMITTED UNLESS DRAWING APPROVED

APPROVED FOR CONSTRUCTION BY: DATE:

SCALE	SIZE	DRAWING NO.	SHEET NO.	REV.
N.T.S.C.	A3	BK-GCS-HY-120-IN-DW-0007	12 OF 16	V01

BUDGET REF.	LOCATION	SIZE	CLASS	SERIAL NO.	SHEET	REVISION

Software Autocad File No BK-GCS-HY-120-N-DW-0007-01.dwg

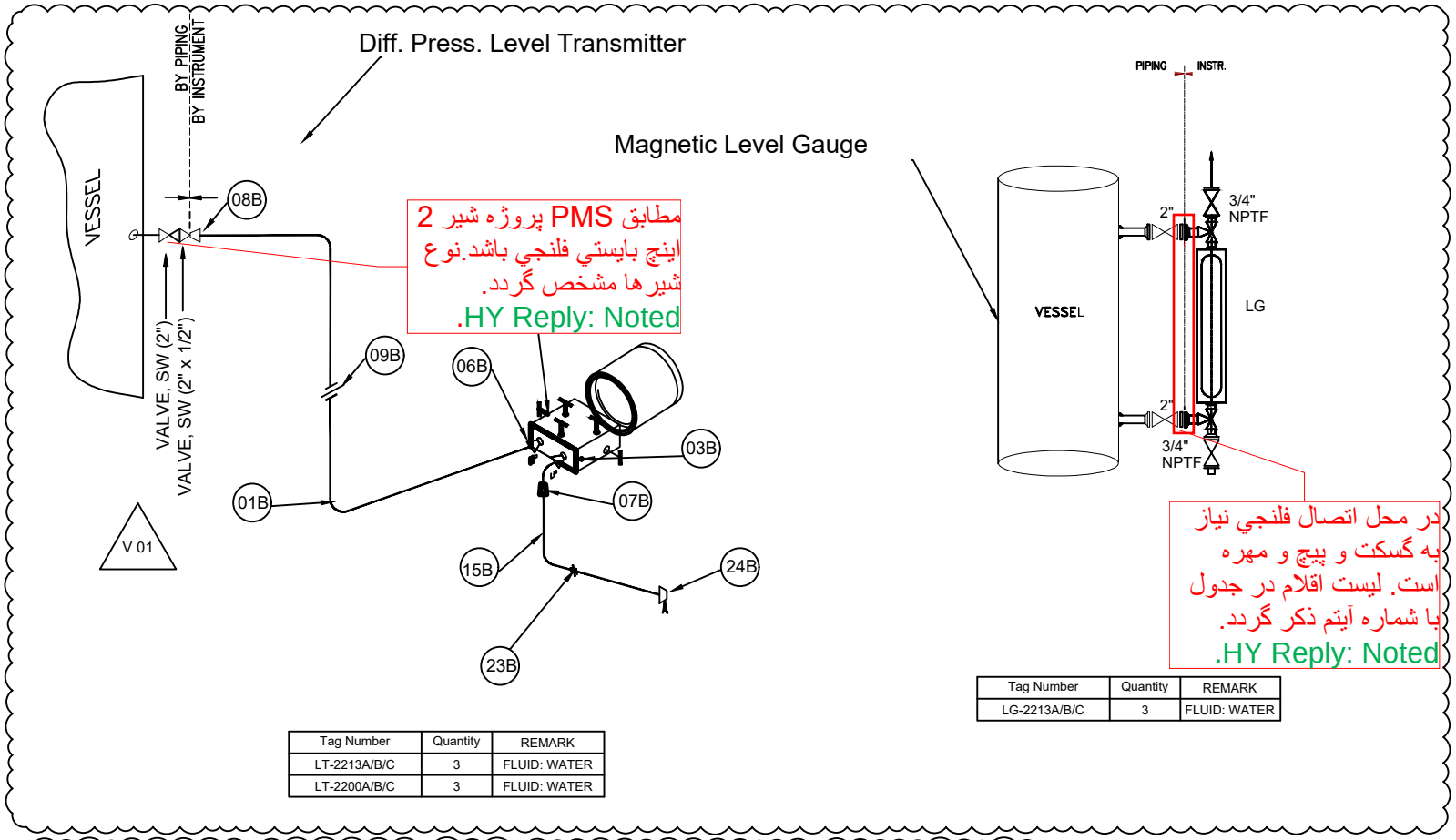

مطابق PMS پروژه شير 2 اينچ بايستي فلنجي باشد.نوع شيرها مشخص گردد.
.HY Reply: Noted

در محل اتصال فلنجي نياز به گسكت و پيچ و مهره است. ليست اقلام در جدول با شماره آيتم ذكر گردد.
.HY Reply: Noted

Tag Number	Quantity	REMARK
LT-2213A/B/C	3	FLUID: WATER
LT-2200A/B/C	3	FLUID: WATER

Tag Number	Quantity	REMARK
LG-2213A/B/C	3	FLUID: WATER

ITEM	QTY	SIZE OR CONNECTION	DESCRIPTION	MATERIAL	TOTAL QTY.	REMARK
21B	1	2x1/2"NPTF + 1/4"	MANIFOLD,5 WAY 3 VALVE	AISI 316SS	6	-
08B	2	1/2" NPTFx 1/2" O.D	DOUBLE FERRULE COMPRESSION TYPE FEMALE CONNECTOR	AISI 316SS	12	-
01B	8m	1/2" O.D	TUBING, SEAMLESS, WALL THICKNESS 0.065"	AISI 316SS	48m	-
09B	2	1/2" O.D	STRAIGHT UNION COMPRESSION TYPE DOUBLE FERRULE	AISI 316SS	12	-
06B	2	1/2" NPTM x 1/2" O.D	DOUBLE FERRULE COMPRESSION TYPE MALE CONNECTOR	AISI 316SS	12	-
07B	1	1/4" NPTM x 1/4" O.D	DOUBLE FERRULE COMPRESSION TYPE MALE CONNECTOR	AISI 316SS	6	-
15B	3m	1/4" O.D	TUBING, SEAMLESS, WALL THICKNESS 0.049"	AISI 316SS	18m	-
23B	1	1/4" O.D	STRAIGHT UNION COMPRESSION TYPE DOUBLE FERRULE	AISI 316SS	6	-
24B	1	1/4" NPTFx 1/4" O.D	DOUBLE FERRULE COMPRESSION TYPE FEMALE CONNECTOR	AISI 316SS	6	-
03B	1	1/4"NPTM	HEX HEAD PLUG	AISI 316SS	6	-

REFERENCE DRAWINGS	DWG. NUMBER
P&I DIAGRAM	BK-GCS-HY-120-PR-PI-0001-V04
INSTRUMENT DATASHEET/ CERTIFICATES	BK-GCS-HY-120-IN-DS-0001-V02

Note :

Legend :

REV.	DATE	P.D.I.	PREP.	CHK.	APP.	AUT.
V01	MAY.2024	IFR	HAVAYAR Co	M.FAKHARIAN	M.SADEGHIAN	
V00	APR.2024	IFR	HAVAYAR Co	M.FAKHARIAN	A.M.MOHSENI	

REV.	DESCRIPTION	CHECKED BY	CHECKED DATE	REV. APPR. BY	REV. APPR. DATE

PROJECT NAME: BINAK OILFIELD DEVELOPMENT SURFACE WORK PACKAGES

PROJECT NO.: ----

EPC CONTRACTOR: NIRGAN ENERGY — NIRGAN & INSPECTION COMPANIES

EPC/EPD CONTRACTOR: PETROIRAN DEVELOPMENT COMPANY — PEDCO

THE ORIGINAL AND ALL COPIES OF THIS DRAWING TOGETHER WITH THE COPYRIGHT THEREIN ARE THE SOLE PROPERTY OF N.I.S.O.C./ FIELDS

BINAK OILFIELD DEVELOPMENT SURFACE WORK PACKAGES

DATE	SCALE	DRAWING BY	CHECKED BY	PROJECT ENG.

DRAWING TITLE: HOOK UP DRAWING

NO CONSTRUCTION PERMITTED UNLESS DRAWING APPROVED

APPROVED FOR CONSTRUCTION BY: DATE:

SCALE	SIZE	DRAWING NO.	SHEET NO.	REV.
N.T.S.C.	A3	BK-GCS-HY-120-IN-DW-0007	13 OF 16	V01

BUDGET REF.	LOCATION	SIZE	CLASS	SERIAL NO.	SHEET	REVISION

Software: Autocad — File No: BK-GCS-HY-120-IN-DW-0007-01.dwg

شیر SW باید بصورت
جوشي نشان داده شود نه
فلنجي. همچنين نوع شير
بايستي مشخص گردد
..HY Reply: Noted

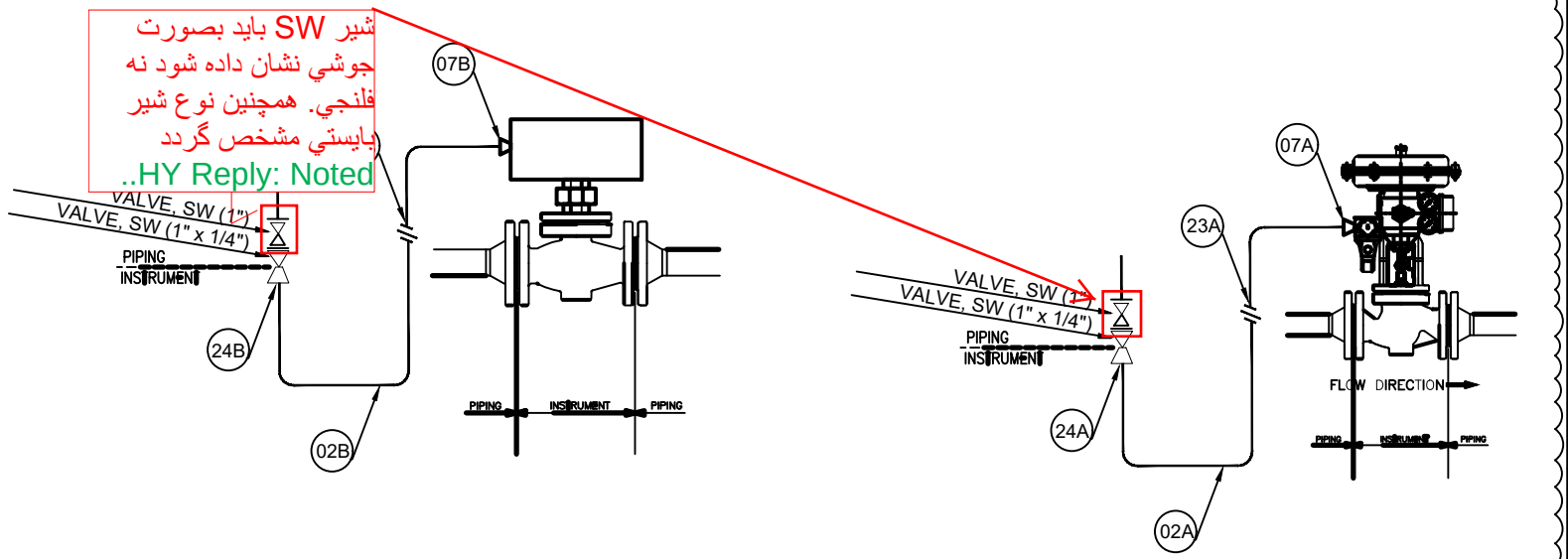

V 01

Tag Number	Quantity	REMARK
SV-2201A/B/C	3	FLUID: AIR
SV-2202A/B/C	3	FLUID: AIR
SV-2203A/B/C	3	FLUID: AIR
SV-2204A/B/C	3	FLUID: AIR
SV-2205A/B/C	3	FLUID: AIR

Tag Number	Quantity	REMARK
PCV-2123A/B/C	3	FLUID: GAS

Sour Gas
HY Reply:
Noted.

ITEM	QTY	SIZE OR CONNECTION	DESCRIPTION	MATERIAL	TOTAL QTY.	REMARK
02B	5m	1/4" O.D	TUBING, SEAMLESS, WALL THICKNESS 0.065"	AISI 316SS	75	-
07B	1	1/4" NPTMx 1/4" O.D	DOUBLE FERRULE COMPRESSION TYPE MALE CONNECTOR	AISI 316SS	15	-
23B	1	1/4" O.D	STRAIGHT UNION COMPRESSION TYPE DOUBLE FERRULE	AISI 316SS	15	-
24B	1	1/4" NPTFx 1/4" O.D	DOUBLE FERRULE COMPRESSION TYPE FEMALE CONNECTOR	AISI 316SS	15	-

ITEM	QTY	SIZE OR CONNECTION	DESCRIPTION	MATERIAL	TOTAL QTY.	REMARK
02A	5m	1/4" O.D	TUBING, SEAMLESS, WALL THICKNESS 0.065"	AISI 316SS	15m	NACE MATERIAL
07A	1	1/4" NPTMx 1/4" O.D	DOUBLE FERRULE COMPRESSION TYPE MALE CONNECTOR	AISI 316SS	3	NACE MATERIAL
23A	1	1/4" O.D	TUBING, SEAMLESS, WALL THICKNESS 0.065"	AISI 316SS	3	NACE MATERIAL
24A	1	1/4" NPTFx 1/4" O.D	STRAIGHT UNION COMPRESSION TYPE DOUBLE FERRULE	AISI 316SS	3	NACE MATERIAL

REFERENCE DRAWINGS	DWG. NUMBER
P&I DIAGRAM	BK-GCS-HY-120-PR-PI-0001-V04
INSTRUMENT DATASHEET/ CERTIFICATES	BK-GCS-HY-120-IN-DS-0001-V02

Note :

Legend :

REV.	DATE	P.O.I.	PREP.	CHK.	APP.	AUT.
V01	MAY.2024	IFR	HAVAYAR Co	M.FAKHARIAN	M.SADEGHIAN	
V00	APR.2024	IFR	HAVAYAR Co	M.FAKHARIAN	A.M.MOHSENI	

REV.	DESCRIPTION	BY	DATE	BY	DATE
		CHECKED		REV. APPR.	

PROJECT NAME: BINAK OILFIELD DEVELOPMENT SURFACE WORK PACKAGES

PROJECT NO.: ----

EPC CONTRACTOR: BINGAN ENERGY – BINGAN & INSPECTION COMPANIES

EPC/EPD CONTRACTOR: PETROIRAN DEVELOPMENT COMPANY (PEDCO)

THE ORIGINAL AND ALL COPIES OF THIS DRAWING TOGETHER WITH THE COPYRIGHT THEREIN ARE THE SOLE PROPERTY OF N.I.S.O.C./ FIELDS

BINAK OILFIELD DEVELOPMENT SURFACE WORK PACKAGES

DATE	SCALE	DRAWING BY	CHECKED BY	PROJECT ENG.

NO CONSTRUCTION PERMITTED UNLESS DRAWING APPROVED

APPROVED FOR CONSTRUCTION BY: DATE:

DRAWING TITLE: HOOK UP DRAWING

SCALE	SIZE	DRAWING NO.	SHEET NO.	REV.
N.T.S.C.	A3	BK-GCS-HY-120-IN-DW-0007	14 OF 16	V01

BUDGET REF.	LOCATION	SEQ. CLASS	SERIAL NO.	SHEET	REVISION

File No: BK-GCS-HY-120-IN-DW-0007-01.dwg

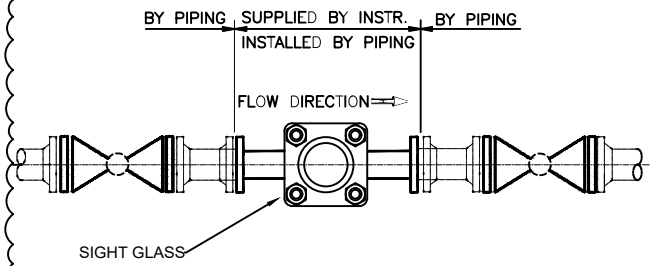

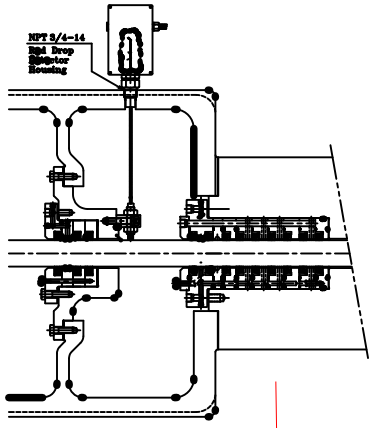

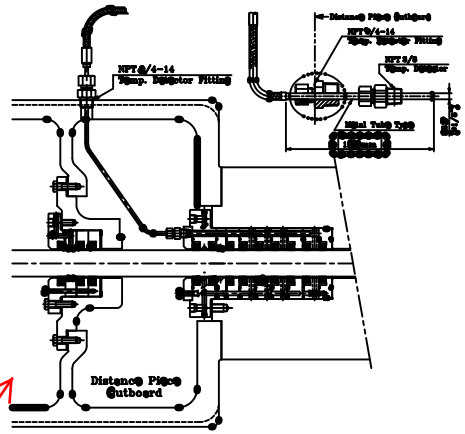

V 01

نقشه واضح نیست. آیتم هاي مذکور در جدول صفحه 16 در نقشه مشخص گردد.
HY Reply: Noted.

Tag Number	Quantity	REMARK
SG-2200A	3	FLUID: WATER
SG-2201A	3	FLUID: WATER
SG-2202A	3	FLUID: WATER
SG-2203A	3	FLUID: WATER

Tag Number	Quantity	REMARK
VE-2200A	3	-
VE-2201A	3	-
VE-2202A	3	-

Tag Number	Quantity	REMARK
C-ZE-2200A	3	-
C-ZE-2201A	3	-

REFERENCE DRAWINGS	DWG. NUMBER
P&I DIAGRAM	BK-GCS-HY-120-PR-PI-0001-V04
INSTRUMENT DATASHEET/ CERTIFICATES	BK-GCS-HY-120-IN-DS-0001-V02

Note :

Legend :

REV.	DATE	P.O.I.	PREP.	CHK.	APP.	AUT.
V01	MAY.2024	IFR	HAVAYAR Co.	M.FAKHARIAN	M.SADEGHIAN	
V00	APR.2024	IFR	HAVAYAR Co.	M.FAKHARIAN	A.M.MOHSENI	

REV.	DESCRIPTION	CHECKED BY	CHECKED DATE	REV. APPR. BY	REV. APPR. DATE

PROJECT NAME: BINAK OILFIELD DEVELOPMENT SURFACE WORK PACKAGES

PROJECT NO.: ----

EPC CONTRACTOR: HIRGAN ENERGY – HIRGAN & INSPECTION COMPANIES

EPC/EPD CONTRACTOR: PETROIRAN DEVELOPMENT COMPANY PEDCO

DRAWING TITLE: HOOK UP DRAWING

SCALE	SIZE	DRAWING NO.	SHEET NO.	REV.
N.T.S.C.	A3	BK-GCS-HY-120-IN-DW-0007	15 OF 16	V01

THE ORIGINAL AND ALL COPIES OF THIS DRAWING TOGETHER WITH THE COPYRIGHT THEREIN ARE THE SOLE PROPERTY OF N.I.S.O.C./ FIELDS

BINAK OILFIELD DEVELOPMENT SURFACE WORK PACKAGES

DATE | SCALE | DRAWING BY | CHECKED BY | PROJECT ENG.

NO CONSTRUCTION PERMITTED UNLESS DRAWING APPROVED

APPROVED FOR CONSTRUCTION BY: DATE:

BUDGET REF. | LOCATION | SEEE CLASS | SERIAL NO. | SHEET | REVISION

File No: BK-GCS-HY-120-IN-DW-0007-01.dwg

ITEM	QTY	SIZE OR CONNECTION	DESCRIPTION	MATERIAL	TOTAL QTY.	REMARK
01A	4	1/2" O.D	TUBING, SEAMLESS, WALL THICKNESS 0.065"	AISI 316SS	146m	NACE MATERIAL
01B	4	1/2" O.D	TUBING, SEAMLESS, WALL THICKNESS 0.065"	AISI 316SS	264m	-
02A	5m	1/4" O.D	TUBING, SEAMLESS, WALL THICKNESS 0.065"	AISI 316SS	15m	NACE MATERIAL
02B	5m	1/4" O.D	TUBING, SEAMLESS, WALL THICKNESS 0.065"	AISI 316SS	75	-
03A	1	1/4"NPTM	HEX HEAD PLUG	AISI 316SS	6	NACE MATERIAL
03B	1	1/4"NPTM	HEX HEAD PLUG	AISI 316SS	6	-
06A	1	1/2" NPTM x 1/2" O.D	DOUBLE FERRULE COMPRESSION TYPE MALE CONNECTOR	AISI 316SS	8	NACE MATERIAL
06B	1	1/2" NPTM x 1/2" O.D	DOUBLE FERRULE COMPRESSION TYPE MALE CONNECTOR	AISI 316SS	84	-
07A	1	1/4" NPTMx 1/4" O.D	DOUBLE FERRULE COMPRESSION TYPE MALE CONNECTOR	AISI 316SS	3	NACE MATERIAL
07B	1	1/4" NPTM x 1/4" O.D	DOUBLE FERRULE COMPRESSION TYPE MALE CONNECTOR	AISI 316SS	21	-
08A	1	1/2" NPTFx 1/2" O.D	DOUBLE FERRULE COMPRESSION TYPE FEMALE CONNECTOR	AISI 316SS	36	NACE MATERIAL
08B	1	1/2" NPTFx 1/2" O.D	DOUBLE FERRULE COMPRESSION TYPE FEMALE CONNECTOR	AISI 316SS	66	-
09A	1	1/2" O.D	STRAIGHT UNION COMPRESSION TYPE DOUBLE FERRULE	AISI 316SS	39	NACE MATERIAL
09B	1	1/2" O.D	STRAIGHT UNION COMPRESSION TYPE DOUBLE FERRULE	AISI 316SS	84	-
13A	1	1/2"NPTF x1/2"NPTF	THERMOWELL - #300 - CON:1/2 NPT - U: 150 mm	AISI 316SS	6	NACE MATERIAL
13A	1	1/2"NPTF x1/2"NPTF	THERMOWELL - #300 - CON:1/2 NPT - U: 400 mm	AISI 316SS	6	NACE MATERIAL
13A	1	1/2"NPTF x1/2"NPTF	THERMOWELL - #300 - CON:1/2 NPT - U: 200 mm	AISI 316SS	6	NACE MATERIAL
13A	1	1/2"NPTF x1/2"NPTF	THERMOWELL - #300 - CON:1/2 NPT - U: 250 mm	AISI 316SS	6	NACE MATERIAL
13B	1	1/2"NPTF x1/2"NPTF	THERMOWELL - #300 - CON:1/2 NPT - U: 200 mm	AISI 316SS	3	-
13B	1	1/2"NPTF x1/2"NPTF	THERMOWELL - #300 - CON:1/2 NPT - U: 150 mm	AISI 316SS	30	-
13B	1	1/2"NPTF x1/2"NPTF	THERMOWELL - #300 - CON:1/2 NPT - U: 400 mm	AISI 316SS	3	-
19A	1	2x1/2"NPTF + 1/4"	MANIFOLD,3 WAY 2 VALVE	AISI 316SS	30	NACE MATERIAL
19B	1	2x1/2"NPTF + 1/4"	MANIFOLD,3 WAY 2 VALVE	AISI 316SS	60	-
20A	1	1/2"NPTM x 1/2"NPTF	OVER RANGE PROTECTION	AISI 316SS	6	NACE MATERIAL
21A	1	2x1/2"NPTF + 1/4"	MANIFOLD,5 WAY 3 VALVE	AISI 316SS	12	NACE MATERTIAL
21B	1	2x1/2"NPTF + 1/4"	MANIFOLD,5 WAY 3 VALVE	AISI 316SS	24	-
23A	1	1/4" O.D	TUBING, SEAMLESS, WALL THICKNESS 0.065"	AISI 316SS	3	NACE MATERIAL
23B	1	1/4" O.D	STRAIGHT UNION COMPRESSION TYPE DOUBLE FERRULE	AISI 316SS	15	-
24A	1	1/4" NPTFx 1/4" O.D	STRAIGHT UNION COMPRESSION TYPE DOUBLE FERRULE	AISI 316SS	3	NACE MATERIAL
24B	1	1/4" NPTFx 1/4" O.D	DOUBLE FERRULE COMPRESSION TYPE FEMALE CONNECTOR	AISI 316SS	21	-
25	1	1/2" NPTM x 1/2" NPTM	COOLING ELEMENT	AISI 316SS	3	NACE MATERIAL
26	1	1/2"NPTF x 1/2"NPTM	SNUBER	AISI 316SS	6	-

V 01

REFERENCE DRAWINGS	DWG. NUMBER
P&I DIAGRAM	BK-GCS-HY-120-PR-PI-0001-V04
INSTRUMENT DATASHEET/ CERTIFICATES	BK-GCS-HY-120-IN-DS-0001-V02

Note :

Legend :

REV.	DATE	P.O.I.	PREP.	CHK.	APP.	AUT.
V02	MAY.2024	IFR	HAVAYAR Co	M.FAKHARIAN	M.SADEGHIAN	
V01	APR.2024	IFR	HAVAYAR Co	M.FAKHARIAN	A.M.MOHSENI	

REV.	DESCRIPTION	BY	DATE	BY	DATE
		CHECKED		REV. APPR.	

PROJECT NAME: BINAK OILFIELD DEVELOPMENT SURFACE WORK PACKAGES

PROJECT NO.: ----

EPC CONTRACTOR: BIRGAN ENERGY – DESIGN & INSPECTION COMPANIES

EPC/EPD CONTRACTOR: PETROIRAN DEVELOPMENT COMPANY PEDCO

DRAWING TITLE: HOOK UP DRAWING

SCALE	SIZE	DRAWING NO.	SHEET NO.	REV.
N.T.S.C.	A3	BK-GCS-HY-120-IN-DW-0007	16 OF 16	V01

THE ORIGINAL AND ALL COPIES OF THIS DRAWING TOGETHER WITH THE COPYRIGHT THEREIN ARE THE SOLE PROPERTY OF N.I.S.O.C./ FIELDS

BINAK OILFIELD DEVELOPMENT SURFACE WORK PACKAGES

DATE	SCALE	DRAWING BY	CHECKED BY	PROJECT ENG.

NO CONSTRUCTION PERMITTED UNLESS DRAWING APPROVED

APPROVED FOR CONSTRUCTION BY: DATE:

BUDGET REF.	LOCATION	SIZE CLASS	SERIAL NO.	SHEET	REVISION

File No: BK-GCS-HY-120-IN-DW-0007-01.dwg