REFERENCE DRAWINGS	DWG. NUMBER
P&I DIAGRAM	BK-GCS-HY-120-PR-PI-0001-V04
INSTRUMENT DATASHEET/ CERTIFICATES	BK-GCS-HY-120-IN-DS-0001-V02

Note :

Legend :

HOOK UP DRAWING

REV.	DATE	P.O.I.	PREP.	CHK.	APP.	AUT.
V03	Jan.2025	IFR	HAVAYAR Co	M.FAKHARIAN	S.Faramarzpour	
V02	OCT.2024	IFR	HAVAYAR Co	M.FAKHARIAN	M.SADEGHIAN	
V01	MAY.2024	IFR	HAVAYAR Co	M.FAKHARIAN	M.SADEGHIAN	
V00	APR.2024	IFR	HAVAYAR Co	M.FAKHARIAN	A.M.MOHSENI	

REV.	DESCRIPTION	CHECKED BY	CHECKED DATE	REV. APPR. BY	REV. APPR. DATE

PROJECT NAME: BINAK OILFIELD DEVELOPMENT SURFACE WORK PACKAGES

PROJECT NO.: ---

دارایی‌های پروژه حق تملک قطعی برای شرکت ملی نفت ایران می‌باشد و هرگونه انتشار و چاپ و پخش این اطلاعات و مشخصات بدون اجازه کتبی مجاز نمی‌باشد.

THE ORIGINAL AND ALL COPIES OF THIS DRAWING TOGETHER WITH THE COPYRIGHT THEREIN ARE THE SOLE PROPERTY OF N.I.S.O.C./ FIELDS

EPC CONTRACTOR:

HIRGAN ENERGY – DESIGN & INSPECTION COMPANIES

EPC/EPD CONTRACTOR:

PEDCO

PETROIRAN DEVELOPMENT COMPANY

BINAK OILFIELD DEVELOPMENT SURFACE WORK PACKAGES

DATE	SCALE	DRAWING BY	CHECKED BY	PROJECT ENG.

HAVAYAR

DRAWING TITLE: HOOK UP DRAWING

NO CONSTRUCTION PERMITTED UNLESS DRAWING APPROVED

APPROVED FOR CONSTRUCTION | BY: | DATE:

SCALE	SIZE	DRAWING NO.	SHEET NO.	REV.
N.T.SC.	A3	BK-GCS-HY-120-IN-DW-0007	01 OF 19	V03

BUDGET REF.	LOCATION	SIZE	CLASS	SERIAL NO.	SHEET	REVISION

Software Autocad File No BK-GCS-HY-120-IN-DW-0007-V03.dwg

Contents

Description	Sheet NO.
1. Symbol and legends	3
2. Pressure Gauge	4~6
3. Pressure Transmitter & Switch	7~9
4. Temperature Gauge & Transmitter	10~11
5. Differential Pressure Transmitter	12
6. Differential Pressure Gauge & Flow Meter	13
7. Flow Transamitter	14
8. Level Transmitter	15
9. 9. On/ Off Valve & Control Valve	16
10. Vibration Switch & Rod drop	17
11. MTO Table	18

REFERENCE DRAWINGS	DWG. NUMBER
P&I DIAGRAM	BK-GCS-HY-120-PR-PI-0001-V04
INSTRUMENT DATASHEET/ CERTIFICATES	BK-GCS-HY-120-IN-DS-0001-V02

Note :

Legend :

REV.	DATE	P.O.I.	PREP.	CHK.	APP.	AUT.
V03	Jan.2025	IFR	HAVAYAR Co	M.FAKHARIAN	S.Faramarzpour	
V02	OCT.2024	IFR	HAVAYAR Co	M.FAKHARIAN	M.SADEGHIAN	
V01	MAY.2024	IFR	HAVAYAR Co	M.FAKHARIAN	M.SADEGHIAN	
V00	APR.2024	IFR	HAVAYAR Co	M.FAKHARIAN	A.M.MOHSENI	

REV.	DESCRIPTION	BY	DATE	BY	DATE
		CHECKED		REV. APPR.	

PROJECT NAME: BINAK OILFIELD DEVELOPMENT SURFACE WORK PACKAGES

PROJECT NO.: ---

EPC CONTRACTOR: HIRGAN ENERGY – DESIGN & INSPECTION COMPANIES

EPC/EPD CONTRACTOR: PETROIRAN DEVELOPMENT COMPANY (PEDCO)

THE ORIGINAL AND ALL COPIES OF THIS DRAWING TOGETHER WITH THE COPYRIGHT THEREIN ARE THE SOLE PROPERTY OF N.I.S.O.C./ FIELDS

اصل و کلیه حقوق مندرج در این نقشه متعلق به شرکت ملی صنایع نفت ایران می‌باشد و هیچ گونه تغییر و تکثیر بدون اجازه کتبی مجاز نمی‌باشد

BINAK OILFIELD DEVELOPMENT SURFACE WORK PACKAGES

DATE	SCALE	DRAWING BY	CHECKED BY	PROJECT ENG.

NO CONSTRUCTION PERMITTED UNLESS DRAWING APPROVED

APPROVED FOR CONSTRUCTION | BY: | DATE:

DRAWING TITLE: HOOK UP DRAWING

SCALE	SIZE	DRAWING NO.	SHEET NO.	REV.
N.T.SC.	A3	BK-GCS-HY-120-IN-DW-0007	02 OF 19	V03

BUDGET REF.	LOCATION	SIZE	CLASS	SERIAL NO.	SHEET	REVISION

HAVAYAR

File No BK-GCS-HY-120-IN-DW-0007-V03.dwg

PRESSURE GAUGE	SAFETY VALVE
PRESSURE TRANSMITTER	CONTROL VALVE
PRESSURE SWITCH	CORROSION COUPON
ULTRASONIC FLOWMETER	ON/OFF VALVE
DISPLACER LEVEL TRANSMITTER	LEVEL GAUGE
ROTAMETER	5-VALVE MANIFOLD
TEMPERATURE GAUGE	3-WAY 2 VALVES MANIFOLD FOR PRESSURE TRANSMITTER AND PRESSURE SWITCH
DIFF. PRESSURE GAUGE	UNION
TEMPERATURE TRANSMITTER	TUBE CAP
DIAPHRAGM SEAL	CONNECTOR
TEMPERATURE SWITCH	SNUBBER
3-WAY 2 VALVES MANIFOLD FOR PRESSURE GAUGES	COOLING ELEMENT

REFERENCE DRAWINGS	DWG. NUMBER
P&I DIAGRAM	BK-GCS-HY-120-PR-PI-0001-V04
INSTRUMENT DATASHEET/ CERTIFICATES	BK-GCS-HY-120-IN-DS-0001-V02

Note :

Legend :

REV.	DATE	P.O.I.	PREP.	CHK.	APP.	AUT.
V03	Jan.2025	IFR	HAVAYAR Co	M.FAKHARIAN	S.Faramarzpour	
V02	OCT.2024	IFR	HAVAYAR Co	M.FAKHARIAN	M.SADEGHIAN	
V01	MAY.2024	IFR	HAVAYAR Co	M.FAKHARIAN	M.SADEGHIAN	
V00	APR.2024	IFR	HAVAYAR Co	M.FAKHARIAN	A.M.MOHSENI	

REV.	DESCRIPTION	BY	DATE	BY	DATE
		CHECKED		REV. APPR.	

PROJECT NAME: BINAK OILFIELD DEVELOPMENT SURFACE WORK PACKAGES

PROJECT NO.: ---

EPC CONTRACTOR: HIRGAN ENERGY – DESIGN & INSPECTION COMPANIES

EPC/EPD CONTRACTOR: PEDCO — PETROIRAN DEVELOPMENT COMPANY

در اساس وی پوب چو چیز تغیر قطعی برای شرکت به قابل‌تنه تمامی‌اوا چی و هرقی‌زن این‌ها چه‌من و کلک و لیمل

THE ORIGINAL AND ALL COPIES OF THIS DRAWING TOGETHER WITH THE COPYRIGHT THEREIN ARE THE SOLE PROPERTY OF N.I.S.O.C./ FIELDS

BINAK OILFIELD DEVELOPMENT SURFACE WORK PACKAGES

DATE	SCALE	DRAWING BY	CHECKED BY	PROJECT ENG.

HAVAYAR

DRAWING TITLE: HOOK UP DRAWING

NO CONSTRUCTION PERMITTED UNLESS DRAWING APPROVED

APPROVED FOR CONSTRUCTION | BY: | DATE:

SCALE	SIZE	DRAWING NO.	SHEET NO.	REV.
N.T.SC.	A3	BK-GCS-HY-120-IN-DW-0007	03 OF 19	V03

BUDGET REF.	LOCATION	SIZE	CLASS	SERIAL NO.	SHEET	REVISION

Software Autocad File No BK-GCS-HY-120-IN-DW-0007-V03.dwg

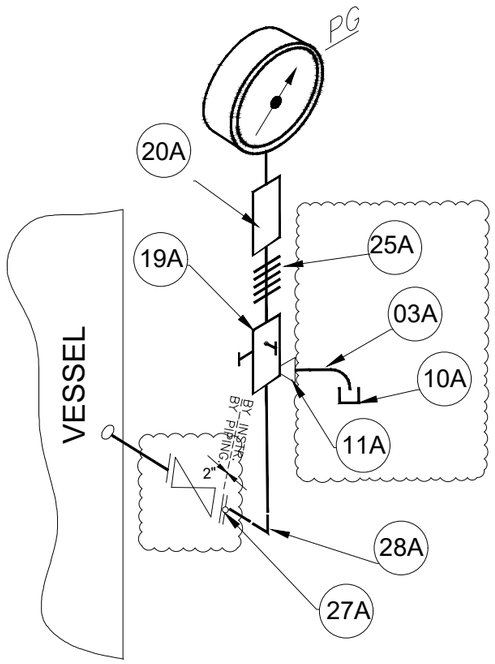

Tag Number	Quantity	REMARK
PG-2190A/B/C	3	FLUID: SOUR GAS
PG-2193A/B/C	3	FLUID: SOUR GAS

ITEM	QTY	SIZE OR CONNECTION	DESCRIPTION	Rating Class	MATERIAL	TOTAL QTY.	REMARK
03A	0.2m	1/4" O.D	TUBING, SEAMLESS, WALL THICKNESS 0.049"	#6000	AISI 316SS	1.2m	NACE MATERIAL
10A	1	1/4"	TUBE CAP	#6000	AISI 316SS	6	NACE MATERIAL
11A	1	1/4" NPTM x 1/4" O.D	DOUBLE FERRULE COMPRESSION TYPE MALE CONNECTOR	#6000	AISI 316SS	6	NACE MATERIAL
19A	1	2x1/2"NPTF + 1/4"NPTF	MANIFOLD,3 WAY 2 VALVE	#6000	AISI 316SS	6	NACE MATERIAL
20A	1	1/2"NPTM x 1/2"NPTF	OVER RANGE PROTECTION	#6000	AISI 316SS	6	NACE MATERIAL
25A	1	1/2" NPTF x 1/2" NPTM	COOLING ELEMENT	#6000	AISI 316SS	6	NACE MATERIAL
27A	1	2"	BLIND FLANGE	#300	AISI 316SS	6	NACE MATERIAL
28A	1	2" SW	Elbow 90		AISI 316SS	6	NACE MATERIAL

REFERENCE DRAWINGS	DWG. NUMBER
P&I DIAGRAM	BK-GCS-HY-120-PR-PI-0001-V04
INSTRUMENT DATASHEET/ CERTIFICATES	BK-GCS-HY-120-IN-DS-0001-V02

Note :

Legend :

REV.	DATE	P.O.I.	PREP.	CHK.	APP.	AUT.
V03	Jan.2025	IFR	HAVAYAR Co	M.FAKHARIAN	S.Faramarzpour	
V02	OCT.2024	IFR	HAVAYAR Co	M.FAKHARIAN	M.SADEGHIAN	
V01	MAY.2024	IFR	HAVAYAR Co	M.FAKHARIAN	M.SADEGHIAN	
V00	APR.2024	IFR	HAVAYAR Co	M.FAKHARIAN	A.M.MOHSENI	

REV.	DESCRIPTION	BY	DATE	BY	DATE
		CHECKED		REV. APPR.	

PROJECT NAME: BINAK OILFIELD DEVELOPMENT SURFACE WORK PACKAGES

PROJECT NO.: ---

EPC CONTRACTOR: HIRGAN ENERGY – DESIGN & INSPECTION COMPANIES

EPC/EPD CONTRACTOR: PETROIRAN DEVELOPMENT COMPANY (PEDCO)

HAVAYAR

دارنده این نقشه حق هرگونه تغییر و یا تکثیر به غیر از موارد مجاز و یا افشای مطالب آن بدون اجازه کتبی شرکت ملی نفت فلات قاره ایران (سازمان ملی نفت) می باشد

THE ORIGINAL AND ALL COPIES OF THIS DRAWING TOGETHER WITH THE COPYRIGHT THEREIN ARE THE SOLE PROPERTY OF N.I.S.O.C./ FIELDS

BINAK OILFIELD DEVELOPMENT SURFACE WORK PACKAGES

DATE	SCALE	DRAWING BY	CHECKED BY	PROJECT ENG.

DRAWING TITLE: HOOK UP DRAWING

NO CONSTRUCTION PERMITTED UNLESS DRAWING APPROVED

APPROVED FOR CONSTRUCTION | BY: | DATE:

SCALE	SIZE	DRAWING NO.	SHEET NO.	REV.
N.T.SC.	A3	BK-GCS-HY-120-IN-DW-0007	04 OF 19	V03

BUDGET REF.	LOCATION	SIZE	CLASS	SERIAL NO.	SHEET	REVISION

Software Autocad File No BK-GCS-HY-120-IN-DW-0007-V03.dwg

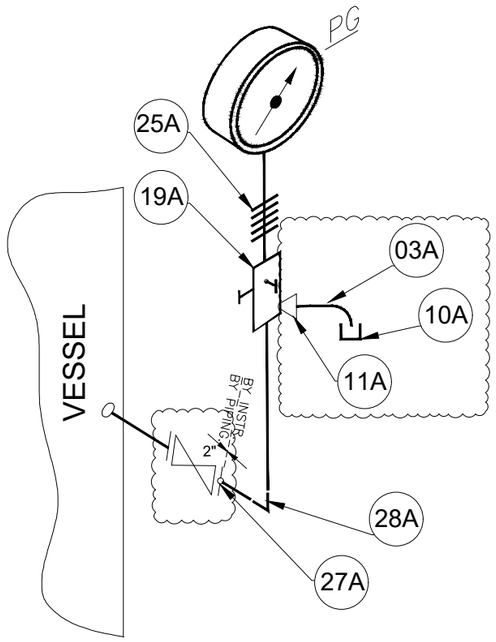

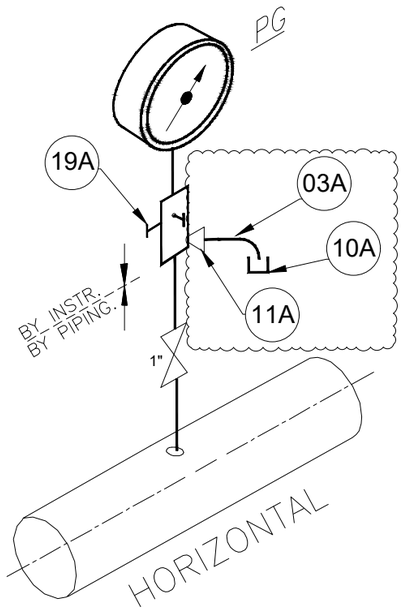

Tag Number	Quantity	Remark
PG-2193A/B/C	3	FLUID: SOUR GAS
PG-2194A/B/C	3	FLUID: SOUR GAS

Tag Number	Quantity	Remark
PG-2205A/B/C	3	FLUID: SOUR GAS

ITEM	QTY	SIZE OR CONNECTION	DESCRIPTION	Rating Class	MATERIAL	TOTAL QTY.	REMARK
03A	0.2m	1/4" O.D	TUBING, SEAMLESS, WALL THICKNESS 0.049"	#6000	AISI 316SS	1.8m	NACE MATERIAL
10A	1	1/4"	TUBE CAP	#6000	AISI 316SS	9	NACE MATERIAL
11A	1	1/4" NPTM x 1/4" O.D	DOUBLE FERRULE COMPRESSION TYPE MALE CONNECTOR	#6000	AISI 316SS	9	NACE MATERIAL
19A	1	2x1/2"NPTF + 1/4"NPTF	MANIFOLD,3 WAY 2 VALVE	#6000	AISI 316SS	9	NACE MATERIAL
25A	1	1/2" NPTF x 1/2" NPTM	COOLING ELEMENT	#6000	AISI 316SS	6	NACE MATERIAL
27A	1	2"	BLIND FLANGE	#300	AISI 316SS	9	NACE MATERIAL
28A	1	2" SW	Elbow 90		AISI 316SS	9	NACE MATERIAL

REFERENCE DRAWINGS	DWG. NUMBER
P&I DIAGRAM	BK-GCS-HY-120-PR-PI-0001-V04
INSTRUMENT DATASHEET/ CERTIFICATES	BK-GCS-HY-120-IN-DS-0001-V02

Note :

Legend :

REV.	DATE	P.O.I.	PREP.	CHK.	APP.	AUT.
V03	Jan.2025	IFR	HAVAYAR Co	M.FAKHARIAN	S.Faramarzpour	
V02	OCT.2024	IFR	HAVAYAR Co	M.FAKHARIAN	M.SADEGHIAN	
V01	MAY.2024	IFR	HAVAYAR Co	M.FAKHARIAN	M.SADEGHIAN	
V00	APR.2024	IFR	HAVAYAR Co	M.FAKHARIAN	A.M.MOHSENI	

REV.	DESCRIPTION	BY	DATE	BY	DATE
		CHECKED		REV. APPR.	

PROJECT NAME: BINAK OILFIELD DEVELOPMENT SURFACE WORK PACKAGES

PROJECT NO.: ---

EPC CONTRACTOR: HIRGAN ENERGY – DESIGN & INSPECTION COMPANIES

EPC/EPD CONTRACTOR: PETROIRAN DEVELOPMENT COMPANY (PEDCO)

اصل و کلیه نسخه های این نقشه و هر نقشه و چاپ اوتوکد متعلق به شرکت ملی مناطق نفت خیز جنوب می باشد
THE ORIGINAL AND ALL COPIES OF THIS DRAWING TOGETHER WITH THE COPYRIGHT THEREIN ARE THE SOLE PROPERTY OF N.I.S.O.C./ FIELDS

BINAK OILFIELD DEVELOPMENT SURFACE WORK PACKAGES

DATE	SCALE	DRAWING BY	CHECKED BY	PROJECT ENG.

NO CONSTRUCTION PERMITTED UNLESS DRAWING APPROVED

APPROVED FOR CONSTRUCTION | BY: | DATE:

DRAWING TITLE: HOOK UP DRAWING

SCALE	SIZE	DRAWING NO.	SHEET NO.	REV.
N.T.SC.	A3	BK-GCS-HY-120-IN-DW-0007	05 OF 19	V03

BUDGET REF.	LOCATION	SIZE	CLASS	SERIAL NO.	SHEET	REVISION

HAVAYAR

Software Autocad File No BK-GCS-HY-120-IN-DW-0007-V03.dwg

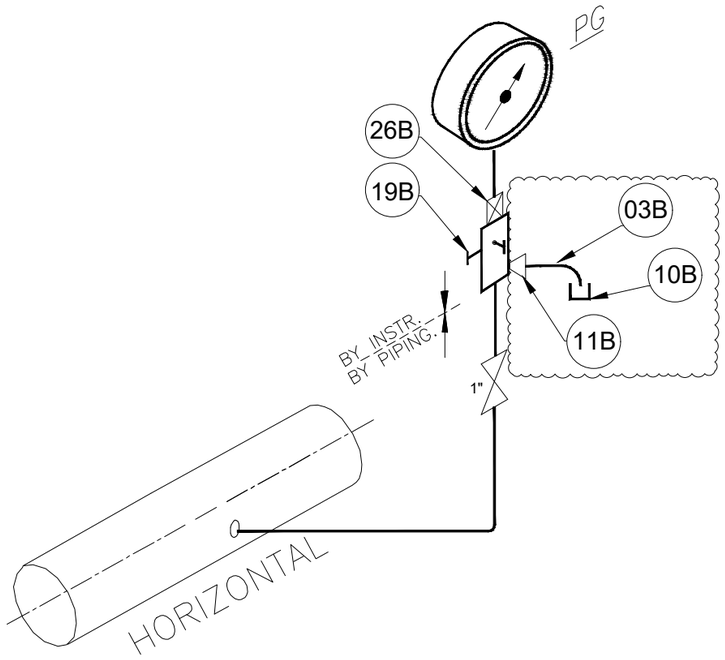

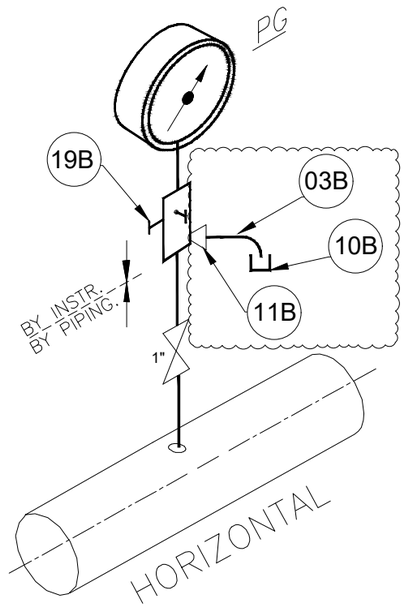

Tag Number	Quantity	Remark
PG-2206A/B/C	3	FLUID: WATER
PG-2207A/B/C	3	FLUID: WATER

Tag Number	Quantity	Remark
PG-2200A/B/C	3	FLUID: AIR
PG-2201A/B/C	3	FLUID: OIL
PG-2202A/B/C	3	FLUID: OIL
PG-2204A/B/C	3	FLUID: OIL
PG-2208A/B/C	3	FLUID: WATER

ITEM	QTY	SIZE OR CONNECTION	DESCRIPTION	Rating Class	MATERIAL	TOTAL QTY.	REMARK
03B	0.2m	1/4" O.D	TUBING, SEAMLESS, WALL THICKNESS 0.049"	#6000	AISI 316SS	4.2m	
10B	1	1/4"	TUBE CAP	#6000	AISI 316SS	21	-
11B	1	1/4" NPTM x 1/4" O.D	DOUBLE FERRULE COMPRESSION TYPE MALE CONNECTOR	#6000	AISI 316SS	21	-
19B	1	2x1/2"NPTF + 1/4"NPTF	MANIFOLD,3 WAY 2 VALVE	#6000	AISI 316SS	21	-
26B	1	1/2"NPTF x 1/2"NPTM	SNUBER	#6000	AISI 316SS	6	-

REFERENCE DRAWINGS	DWG. NUMBER
P&I DIAGRAM	BK-GCS-HY-120-PR-PI-0001-V04
INSTRUMENT DATASHEET/ CERTIFICATES	BK-GCS-HY-120-IN-DS-0001-V02

Note :

Legend :

REV.	DATE	P.O.I.	PREP.	CHK.	APP.	AUT.
V03	Jan.2025	IFR	HAVAYAR Co	M.FAKHARIAN	S.Faramarzpour	
V02	OCT.2024	IFR	HAVAYAR Co	M.FAKHARIAN	M.SADEGHIAN	
V01	MAY.2024	IFR	HAVAYAR Co	M.FAKHARIAN	M.SADEGHIAN	
V00	APR.2024	IFR	HAVAYAR Co	M.FAKHARIAN	A.M.MOHSENI	

REV.	DESCRIPTION	BY	DATE	BY	DATE
		CHECKED		REV. APPR.	

PROJECT NAME: BINAK OILFIELD DEVELOPMENT SURFACE WORK PACKAGES

PROJECT NO.: ---

EPC CONTRACTOR: HIRGAN ENERGY – DESIGN & INSPECTION COMPANIES

EPC/EPD CONTRACTOR: PETROIRAN DEVELOPMENT COMPANY (PEDCO)

THE ORIGINAL AND ALL COPIES OF THIS DRAWING TOGETHER WITH THE COPYRIGHT THEREIN ARE THE SOLE PROPERTY OF N.I.S.O.C./ FIELDS

BINAK OILFIELD DEVELOPMENT SURFACE WORK PACKAGES

DATE	SCALE	DRAWING BY	CHECKED BY	PROJECT ENG.

HAVAYAR

DRAWING TITLE: HOOK UP DRAWING

NO CONSTRUCTION PERMITTED UNLESS DRAWING APPROVED

APPROVED FOR CONSTRUCTION | BY: | DATE:

SCALE	SIZE	DRAWING NO.	SHEET NO.	REV.
N.T.SC.	A3	BK-GCS-HY-120-IN-DW-0007	06 OF 19	V03

BUDGET REF.	LOCATION	SIZE	CLASS	SERIAL NO.	SHEET	REVISION

File No BK-GCS-HY-120-IN-DW-0007-V03.dwg

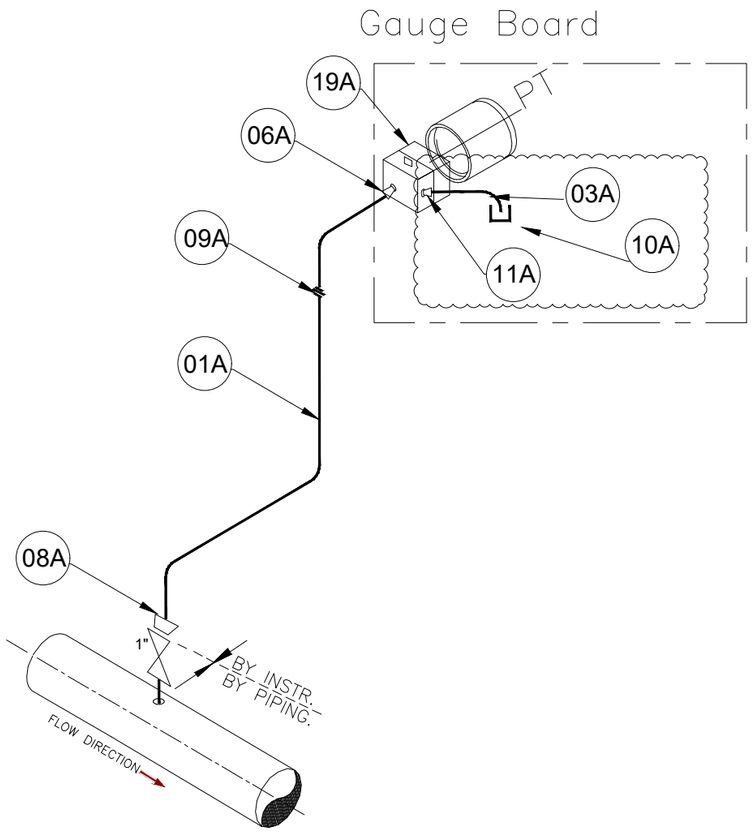

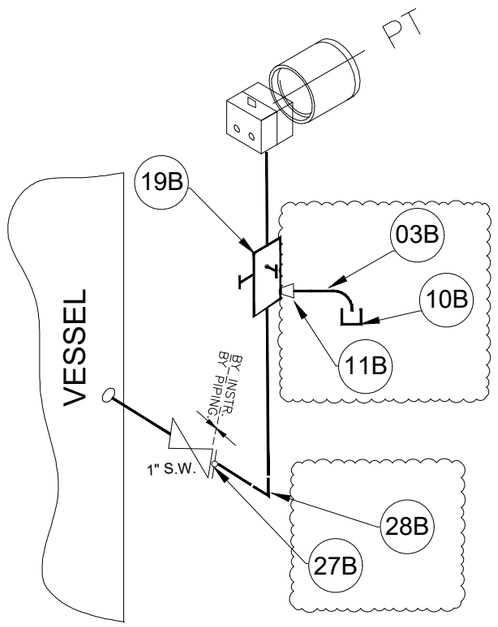

Tag Number	Quantity	Remark
PT-2123A/B/C	3	FLUID: SOUR GAS
PT-2124A/B/C	3	FLUID: SOUR GAS
PT-2133A/B/C	3	FLUID: SOUR GAS
PT-2132A/B/C	3	FLUID: SOUR GAS

Tag Number	Quantity	Remark
PT-2200A/B/C	3	FLUID: OIL

ITEM	QTY	SIZE OR CONNECTION	DESCRIPTION	Rating Class	MATERIAL	TOTAL QTY.	REMARK
01A	4m	1/2" O.D	TUBING, SEAMLESS, WALL THICKNESS 0.065"	#6000	AISI 316SS	48m	NACE MATERIAL
03A	0.2m	1/4" O.D	TUBING, SEAMLESS, WALL THICKNESS 0.049"	#6000	AISI 316SS	3m	NACE MATERIAL
06A	1	1/2" NPTM x 1/2" O.D	DOUBLE FERRULE COMPRESSION TYPE MALE CONNECTOR	#6000	AISI 316SS	12	NACE MATERIAL
08A	1	1/2" NPTFx 1/2" O.D	DOUBLE FERRULE COMPRESSION TYPE FEMALE CONNECTOR	#6000	AISI 316SS	12	NACE MATERIAL
09A	1	1/2" O.D	STRAIGHT UNION COMPRESSION TYPE DOUBLE FERRULE	#6000	AISI 316SS	12	NACE MATERIAL
10A	1	1/4"	TUBE CAP	#6000	AISI 316SS	21	NACE MATERIAL
11A	1	1/4" NPTM x 1/4" O.D	DOUBLE FERRULE COMPRESSION TYPE MALE CONNECTOR	#6000	AISI 316SS	21	NACE MATERIAL
19A	1	2x1/2"NPTF + 1/4"NPTF	MANIFOLD,3 WAY 2 VALVE	#6000	AISI 316SS	12	NACE MATERIAL
03B	0.2m	1/4" O.D	TUBING, SEAMLESS, WALL THICKNESS 0.049"	#6000	AISI 316SS	0.6m	-
10B	1	1/4"	TUBE CAP	#6000	AISI 316SS	3	-
11B	1	1/4" NPTM x 1/4" O.D	DOUBLE FERRULE COMPRESSION TYPE MALE CONNECTOR	#6000	AISI 316SS	3	-
19B	1	2x1/2"NPTF + 1/4"NPTF	MANIFOLD,3 WAY 2 VALVE	#6000	AISI 316SS	3	-
27B	1	2"	BLIND FLANGE	#300	AISI 316SS	3	-
28B	1	1" SW	Elbow 90		AISI 316SS	3	-

REFERENCE DRAWINGS	DWG. NUMBER
P&I DIAGRAM	BK-GCS-HY-120-PR-PI-0001-V04
INSTRUMENT DATASHEET/ CERTIFICATES	BK-GCS-HY-120-IN-DS-0001-V02

Note :

Legend :

REV.	DATE	P.O.I.	PREP.	CHK.	APP.	AUT.
V03	Jan.2025	IFR	HAVAYAR Co	M.FAKHARIAN	S.Faramarzpour	
V02	OCT.2024	IFR	HAVAYAR Co	M.FAKHARIAN	M.SADEGHIAN	
V01	MAY.2024	IFR	HAVAYAR Co	M.FAKHARIAN	M.SADEGHIAN	
V00	APR.2024	IFR	HAVAYAR Co	M.FAKHARIAN	A.M.MOHSENI	

REV.	DESCRIPTION	BY	DATE	BY	DATE
		CHECKED		REV. APPR.	

PROJECT NAME: BINAK OILFIELD DEVELOPMENT SURFACE WORK PACKAGES

PROJECT NO.: ---

EPC CONTRACTOR: HIRGAN ENERGY – DESIGN & INSPECTION COMPANIES

EPC/EPD CONTRACTOR: PETROIRAN DEVELOPMENT COMPANY (PEDCO)

THE ORIGINAL AND ALL COPIES OF THIS DRAWING TOGETHER WITH THE COPYRIGHT THEREIN ARE THE SOLE PROPERTY OF N.I.S.O.C./ FIELDS

BINAK OILFIELD DEVELOPMENT SURFACE WORK PACKAGES

DATE	SCALE	DRAWING BY	CHECKED BY	PROJECT ENG.

HAVAYAR

DRAWING TITLE: HOOK UP DRAWING

NO CONSTRUCTION PERMITTED UNLESS DRAWING APPROVED

APPROVED FOR CONSTRUCTION | BY: | DATE:

SCALE	SIZE	DRAWING NO.	SHEET NO.	REV.
N.T.SC.	A3	BK-GCS-HY-120-IN-DW-0007	07 OF 19	V03

BUDGET REF.	LOCATION	SIZE	CLASS	SERIAL NO.	SHEET	REVISION

Software Autocad File No BK-GCS-HY-120-IN-DW-0007-V03.dwg

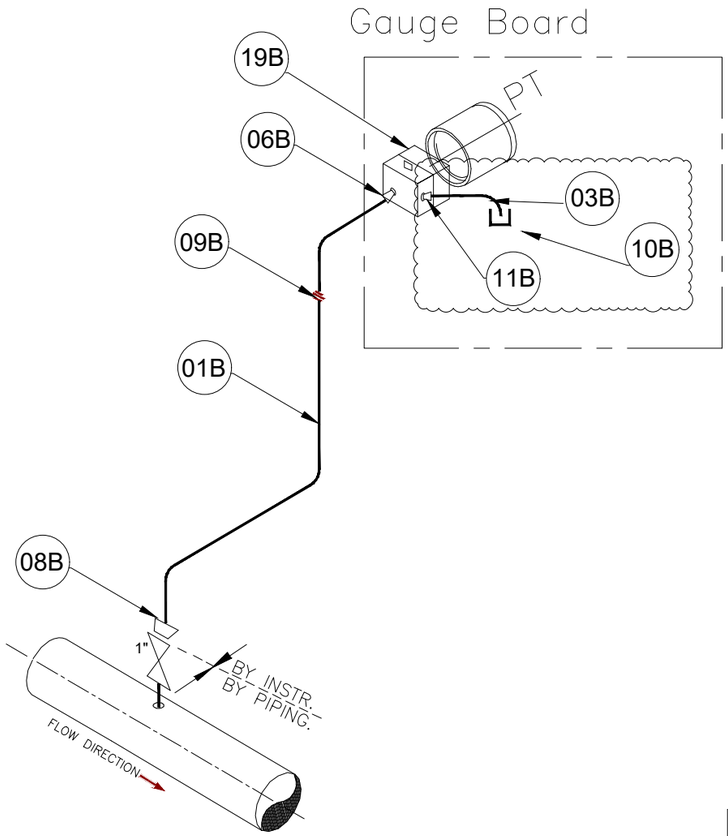

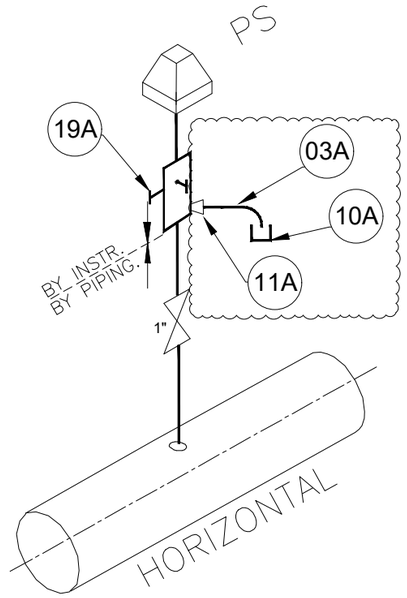

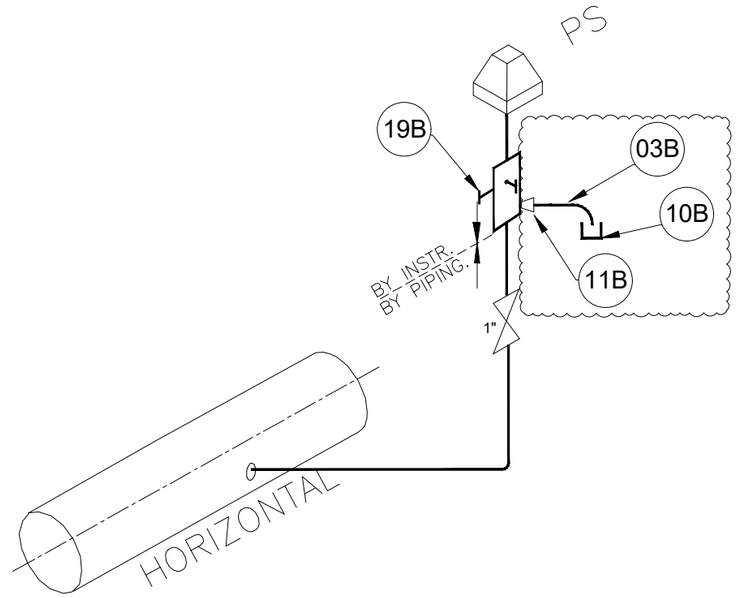

Tag Number	Quantity	Remark
PS-2133A/B/C	3	FLUID: SOUR GAS

Tag Number	Quantity	Remark
PS-2204A/B/C	3	FLUID: OIL
PS-2220A/B/C	3	FLUID: WATER

Tag Number	Quantity	Remark
PT-2201A/B/C	3	FLUID:AIR

ITEM	QTY	SIZE OR CONNECTION	DESCRIPTION	Rating Class	MATERIAL	TOTAL QTY.	REMARK
03A	0.2m	1/4" O.D	TUBING, SEAMLESS, WALL THICKNESS 0.065"	#6000	AISI 316SS	0.6m	NACE MATERIAL
10A	1	1/4"	TUBE CAP	#6000	AISI 316SS	3	NACE MATERIAL
11A	1	1/4" NPTM x 1/4" O.D	DOUBLE FERRULE COMPRESSION TYPE MALE CONNECTOR	#6000	AISI 316SS	3	NACE MATERIAL
19A	1	2x1/2"NPTF + 1/4"NPTF	MANIFOLD,3 WAY 2 VALVE	#6000	AISI 316SS	3	NACE MATERIAL
01B	4m	1/2" O.D	TUBING, SEAMLESS, WALL THICKNESS 0.065"	#6000	AISI 316SS	36m	-
03B	0.2m	1/4" O.D	TUBING, SEAMLESS, WALL THICKNESS 0.065"	#6000	AISI 316SS	1.8m	-
06B	1	1/2" NPTM x 1/2" O.D	DOUBLE FERRULE COMPRESSION TYPE MALE CONNECTOR	#6000	AISI 316SS	9	-
08B	1	1/2" NPTFx 1/2" O.D	DOUBLE FERRULE COMPRESSION TYPE FEMALE CONNECTOR	#6000	AISI 316SS	9	-
09B	1	1/2" O.D	STRAIGHT UNION COMPRESSION TYPE DOUBLE FERRULE	#6000	AISI 316SS	9	-
10B	1	1/4"	TUBE CAP	#6000	AISI 316SS	9	-
11B	1	1/4" NPTM x 1/4" O.D	DOUBLE FERRULE COMPRESSION TYPE MALE CONNECTOR	#6000	AISI 316SS	9	-
19B	1	2x1/2"NPTF + 1/4"	MANIFOLD,3 WAY 2 VALVE	#6000	AISI 316SS	9	-

REFERENCE DRAWINGS	DWG. NUMBER
P&I DIAGRAM	BK-GCS-HY-120-PR-PI-0001-V04
INSTRUMENT DATASHEET/ CERTIFICATES	BK-GCS-HY-120-IN-DS-0001-V02

Note :

Legend :

REV.	DATE	P.O.I.	PREP.	CHK.	APP.	AUT.
V03	Jan.2025	IFR	HAVAYAR Co	M.FAKHARIAN	S.Faramarzpour	
V02	OCT.2024	IFR	HAVAYAR Co	M.FAKHARIAN	M.SADEGHIAN	
V01	MAY.2024	IFR	HAVAYAR Co	M.FAKHARIAN	M.SADEGHIAN	
V00	APR.2024	IFR	HAVAYAR Co	M.FAKHARIAN	A.M.MOHSENI	

REV.	DESCRIPTION	BY	DATE	BY	DATE
		CHECKED		REV. APPR.	

PROJECT NAME: BINAK OILFIELD DEVELOPMENT SURFACE WORK PACKAGES

PROJECT NO.: ---

در اساس وی پوب چوپ چوز تفرق قطاع ملی شرکت سه قابل متنع مساعد اوچ و چو و هرقی این اوچ هرسن هیکلک و لیمل

THE ORIGINAL AND ALL COPIES OF THIS DRAWING TOGETHER WITH THE COPYRIGHT THEREIN ARE THE SOLE PROPERTY OF N.I.S.O.C./ FIELDS

EPC CONTRACTOR: HIRGAN ENERGY – DESIGN & INSPECTION COMPANIES

EPC/EPD CONTRACTOR: PEDCO — PETROIRAN DEVELOPMENT COMPANY

BINAK OILFIELD DEVELOPMENT SURFACE WORK PACKAGES

DATE	SCALE	DRAWING BY	CHECKED BY	PROJECT ENG.

HAVAYAR

DRAWING TITLE: HOOK UP DRAWING

NO CONSTRUCTION PERMITTED UNLESS DRAWING APPROVED

APPROVED FOR CONSTRUCTION | BY: | DATE:

SCALE	SIZE	DRAWING NO.	SHEET NO.	REV.
N.T.SC.	A3	BK-GCS-HY-120-IN-DW-0007	08 OF 19	V03

BUDGET REF.	LOCATION	SIZE	CLASS	SERIAL NO.	SHEET	REVISION

Software Autocad File No BK-GCS-HY-120-IN-DW-0007-V03.dwg

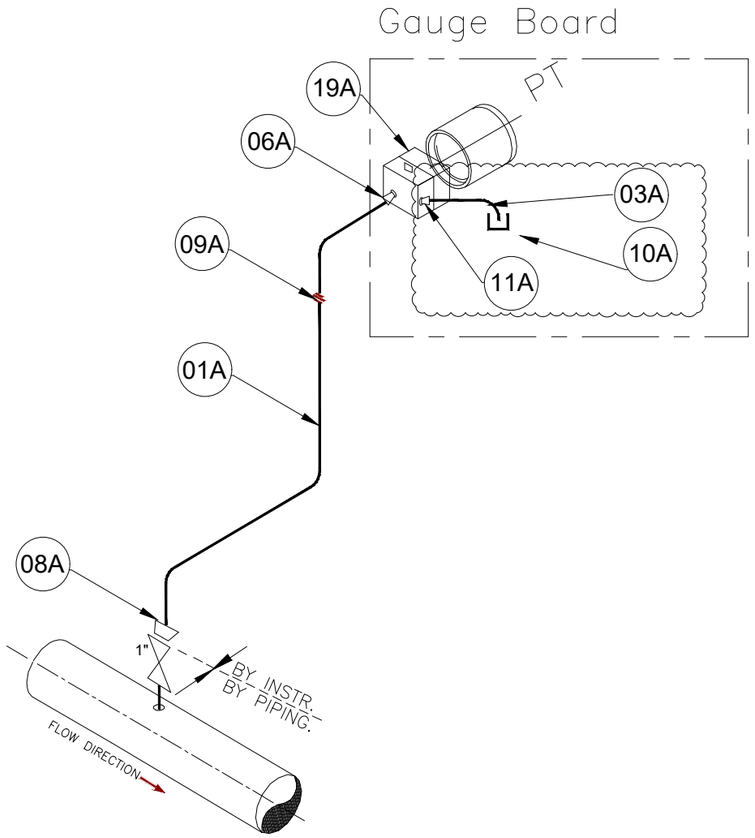

Tag Number	Quantity	Remark
PT-2204A/B/C	3	FLUID: SOUR GAS
PT-2211A/B/C	3	FLUID: SOUR GAS

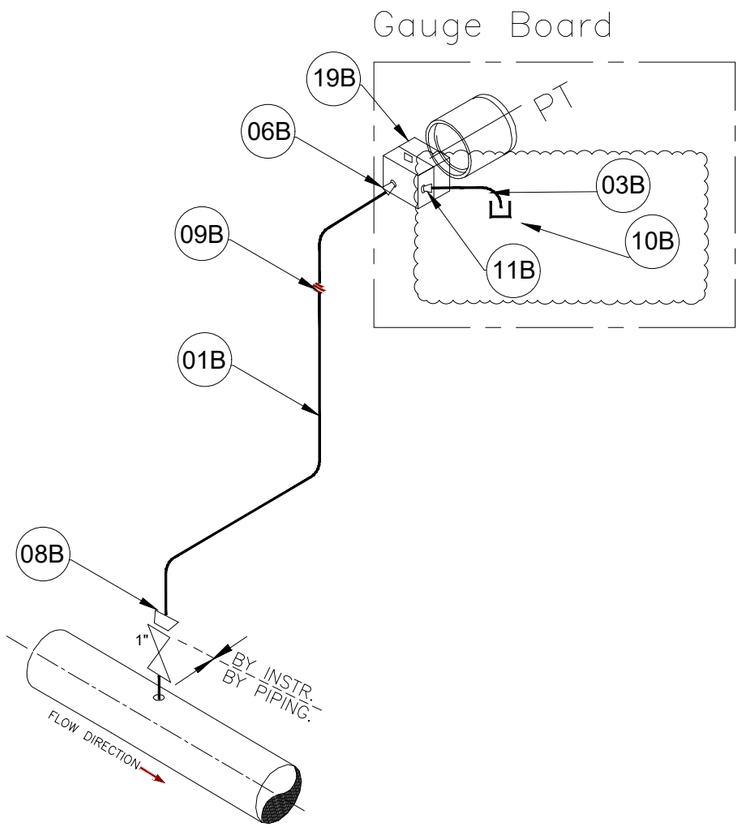

Tag Number	Quantity	Remark
PT-2220A/B/C	3	FLUID: WATER
PT-2221A/B/C	3	FLUID: WATER
PT-2210A/B/C	3	FLUID: OIL

ITEM	QTY	SIZE OR CONNECTION	DESCRIPTION	Rating Class	MATERIAL	TOTAL QTY.	REMARK
01A	4m	1/2" O.D	TUBING, SEAMLESS, WALL THICKNESS 0.065"	#6000	AISI 316SS	24m	NACE MATERIAL
03A	0.2m	1/4" O.D	TUBING, SEAMLESS, WALL THICKNESS 0.065"	#6000	AISI 316SS	1.2m	NACE MATERIAL
06A	1	1/2" NPTM x 1/2" O.D	DOUBLE FERRULE COMPRESSION TYPE MALE CONNECTOR	#6000	AISI 316SS	6	NACE MATERIAL
08A	1	1/2" NPTFx 1/2" O.D	DOUBLE FERRULE COMPRESSION TYPE FEMALE CONNECTOR	#6000	AISI 316SS	6	NACE MATERIAL
09A	1	1/2" O.D	STRAIGHT UNION COMPRESSION TYPE DOUBLE FERRULE	#6000	AISI 316SS	6	NACE MATERIAL
10A	1	1/4"	TUBE CAP	#6000	AISI 316SS	6	NACE MATERIAL
11A	1	1/4" NPTM x 1/4" O.D	DOUBLE FERRULE COMPRESSION TYPE MALE CONNECTOR	#6000	AISI 316SS	6	NACE MATERIAL
19A	1	2x1/2"NPTF + 1/4"NPTF	MANIFOLD,3 WAY 2 VALVE	#6000	AISI 316SS	6	NACE MATERIAL
08B	1	1/2" NPTFx 1/2" O.D	DOUBLE FERRULE COMPRESSION TYPE FEMALE CONNECTOR	#6000	AISI 316SS	9	-
01B	4m	1/2" O.D	TUBING, SEAMLESS, WALL THICKNESS 0.065"	#6000	AISI 316SS	36m	-
03B	0.2m	1/4" O.D	TUBING, SEAMLESS, WALL THICKNESS 0.065"	#6000	AISI 316SS	1.8m	-
06B	1	1/2" NPTM x 1/2" O.D	DOUBLE FERRULE COMPRESSION TYPE MALE CONNECTOR	#6000	AISI 316SS	9	-
08B	1	1/2" NPTFx 1/2" O.D	DOUBLE FERRULE COMPRESSION TYPE FEMALE CONNECTOR	#6000	AISI 316SS	9	-
09B	1	1/2" O.D	STRAIGHT UNION COMPRESSION TYPE DOUBLE FERRULE	#6000	AISI 316SS	9	-
10B	1	1/4"	TUBE CAP	#6000	AISI 316SS	9	-
11B	1	1/4" NPTM x 1/4" O.D	DOUBLE FERRULE COMPRESSION TYPE MALE CONNECTOR	#6000	AISI 316SS	9	-
19B	1	2x1/2"NPTF + 1/4"	MANIFOLD,3 WAY 2 VALVE	#6000	AISI 316SS	9	-

REFERENCE DRAWINGS	DWG. NUMBER
P&I DIAGRAM	BK-GCS-HY-120-PR-PI-0001-V04
INSTRUMENT DATASHEET/ CERTIFICATES	BK-GCS-HY-120-IN-DS-0001-V02

Note :

Legend :

REV.	DATE	P.O.I.	PREP.	CHK.	APP.	AUT.
V03	Jan.2025	IFR	HAVAYAR Co	M.FAKHARIAN	S.Faramarzpour	
V02	OCT.2024	IFR	HAVAYAR Co	M.FAKHARIAN	M.SADEGHIAN	
V01	MAY.2024	IFR	HAVAYAR Co	M.FAKHARIAN	M.SADEGHIAN	
V00	APR.2024	IFR	HAVAYAR Co	M.FAKHARIAN	A.M.MOHSENI	

REV.	DESCRIPTION	BY	DATE	BY	DATE
		CHECKED		REV. APPR.	

PROJECT NAME: BINAK OILFIELD DEVELOPMENT SURFACE WORK PACKAGES

PROJECT NO.: ---

EPC CONTRACTOR: HIRGAN ENERGY – DESIGN & INSPECTION COMPANIES

EPC/EPD CONTRACTOR: PETROIRAN DEVELOPMENT COMPANY (PEDCO)

این نقشه و کلیه حقوق مادی و معنوی آن متعلق به شرکت ملی فرآورده های نفتی ایران می باشد و چاپ و تکثیر آن بدون اجازه کتبی مجاز نمی باشد.

THE ORIGINAL AND ALL COPIES OF THIS DRAWING TOGETHER WITH THE COPYRIGHT THEREIN ARE THE SOLE PROPERTY OF N.I.S.O.C./ FIELDS

BINAK OILFIELD DEVELOPMENT SURFACE WORK PACKAGES

DATE	SCALE	DRAWING BY	CHECKED BY	PROJECT ENG.

NO CONSTRUCTION PERMITTED UNLESS DRAWING APPROVED

APPROVED FOR CONSTRUCTION	BY:	DATE:

DRAWING TITLE: HOOK UP DRAWING

SCALE	SIZE	DRAWING NO.	SHEET NO.	REV.
N.T.SC.	A3	BK-GCS-HY-120-IN-DW-0007	09 OF 19	V03

BUDGET REF.	LOCATION	SIZE	CLASS	SERIAL NO.	SHEET	REVISION

HAVAYAR

File No: BK-GCS-HY-120-IN-DW-0007-V03.dwg

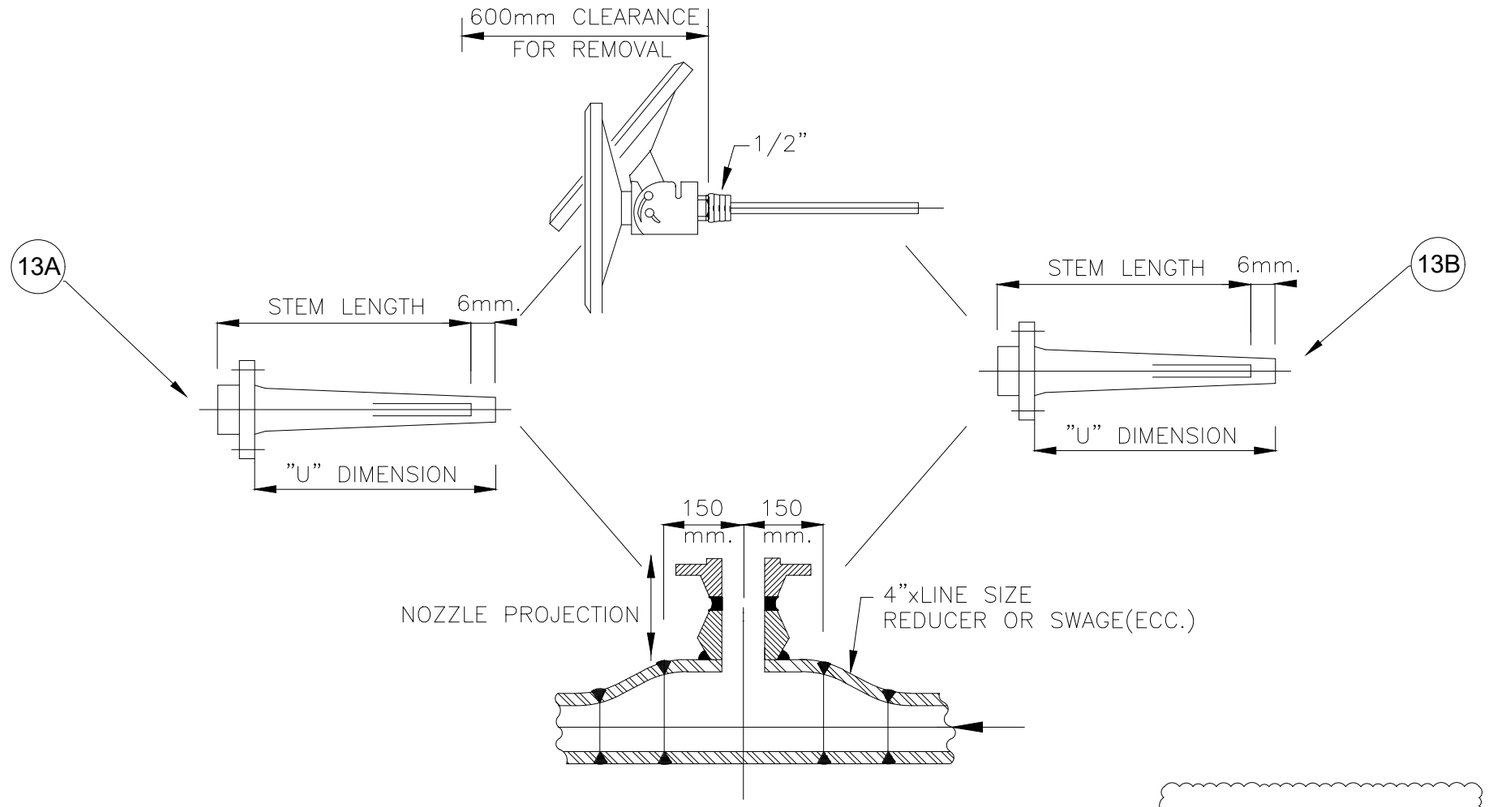

Tag Number	Quantity	Nozzel Projection length mm	WELL "U" mm	STEM LENGTH	REMARK
TG-2210A/B/C	3	170	230	280	PIPE MOUNTED / FLUID: SOUR GAS
TG-2211A/B/C	3	170	230	280	PIPE MOUNTED / FLUID: SOUR GAS
TG-2190A/B/C	3	200	500	540	VESSEL MOUNTED / FLUID: SOUR GAS
TG-2193A/B/C	3	200	500	540	VESSEL MOUNTED / FLUID: SOUR GAS

Tag Number	Quantity	Nozzel Projection length mm	WELL "U" mm	STEM LENGTH	REMARK
TG-2204A/B/C	3	170	230	280	PIPE MOUNTED / FLUID: WATER
TG-2205A/B/C	3	170	230	280	PIPE MOUNTED / FLUID: WATER
TG-2206A/B/C	3	170	230	280	PIPE MOUNTED / FLUID: WATER
TG-2221A/B/C	3	170	230	280	PIPE MOUNTED / FLUID: WATER
TG-2215A/B/C	3	170	230	280	PIPE MOUNTED / FLUID: WATER
TG-2216A/B/C	3	170	230	280	PIPE MOUNTED / FLUID: WATER
TG-2212A/B/C	3	170	230	280	PIPE MOUNTED / FLUID: WATER
TG-2213A/B/C	3	170	230	280	PIPE MOUNTED / FLUID: WATER
TG-2214A/B/C	3	170	230	280	PIPE MOUNTED / FLUID: WATER
TG-2217A/B/C	3	170	230	280	VESSEL MOUNTED / FLUID: SOUR GAS

ITEM	QTY	SIZE OR CONNECTION	DESCRIPTION	MATERIAL	TOTAL QTY.	REMARK
13A	1	1/2"NPTF x1/2"NPTF	THERMOWELL	AISI 316SS	15	NACE MATERIAL
13B	1	1/2"NPTF x1/2"NPTF	THERMOWELL	AISI 316SS	30	-

REFERENCE DRAWINGS	DWG. NUMBER
P&I DIAGRAM	BK-GCS-HY-120-PR-PI-0001-V04
INSTRUMENT DATASHEET/ CERTIFICATES	BK-GCS-HY-120-IN-DS-0001-V02

Note :

Legend :

REV.	DATE	P.O.I.	PREP.	CHK.	APP.	AUT.
V03	Jan.2025	IFR	HAVAYAR Co	M.FAKHARIAN	S.Faramarzpour	
V02	OCT.2024	IFR	HAVAYAR Co	M.FAKHARIAN	M.SADEGHIAN	
V01	MAY.2024	IFR	HAVAYAR Co	M.FAKHARIAN	M.SADEGHIAN	
V00	APR.2024	IFR	HAVAYAR Co	M.FAKHARIAN	A.M.MOHSENI	

REV.	DESCRIPTION	CHECKED BY	CHECKED DATE	REV. APPR. BY	REV. APPR. DATE

PROJECT NAME: BINAK OILFIELD DEVELOPMENT SURFACE WORK PACKAGES

PROJECT NO.: ---

EPC CONTRACTOR: HIRGAN ENERGY – DESIGN & INSPECTION COMPANIES

EPC/EPD CONTRACTOR: PETROIRAN DEVELOPMENT COMPANY (PEDCO)

THE ORIGINAL AND ALL COPIES OF THIS DRAWING TOGETHER WITH THE COPYRIGHT THEREIN ARE THE SOLE PROPERTY OF N.I.S.O.C./ FIELDS

BINAK OILFIELD DEVELOPMENT SURFACE WORK PACKAGES

DATE	SCALE	DRAWING BY	CHECKED BY	PROJECT ENG.

HAVAYAR

DRAWING TITLE: HOOK UP DRAWING

NO CONSTRUCTION PERMITTED UNLESS DRAWING APPROVED

APPROVED FOR CONSTRUCTION | BY: | DATE:

SCALE	SIZE	DRAWING NO.	SHEET NO.	REV.
N.T.SC.	A3	BK-GCS-HY-120-IN-DW-0007	10 OF 19	V03

BUDGET REF.	LOCATION	SIZE	CLASS	SERIAL NO.	SHEET	REVISION

Software Autocad File No BK-GCS-HY-120-IN-DW-0007-V03.dwg

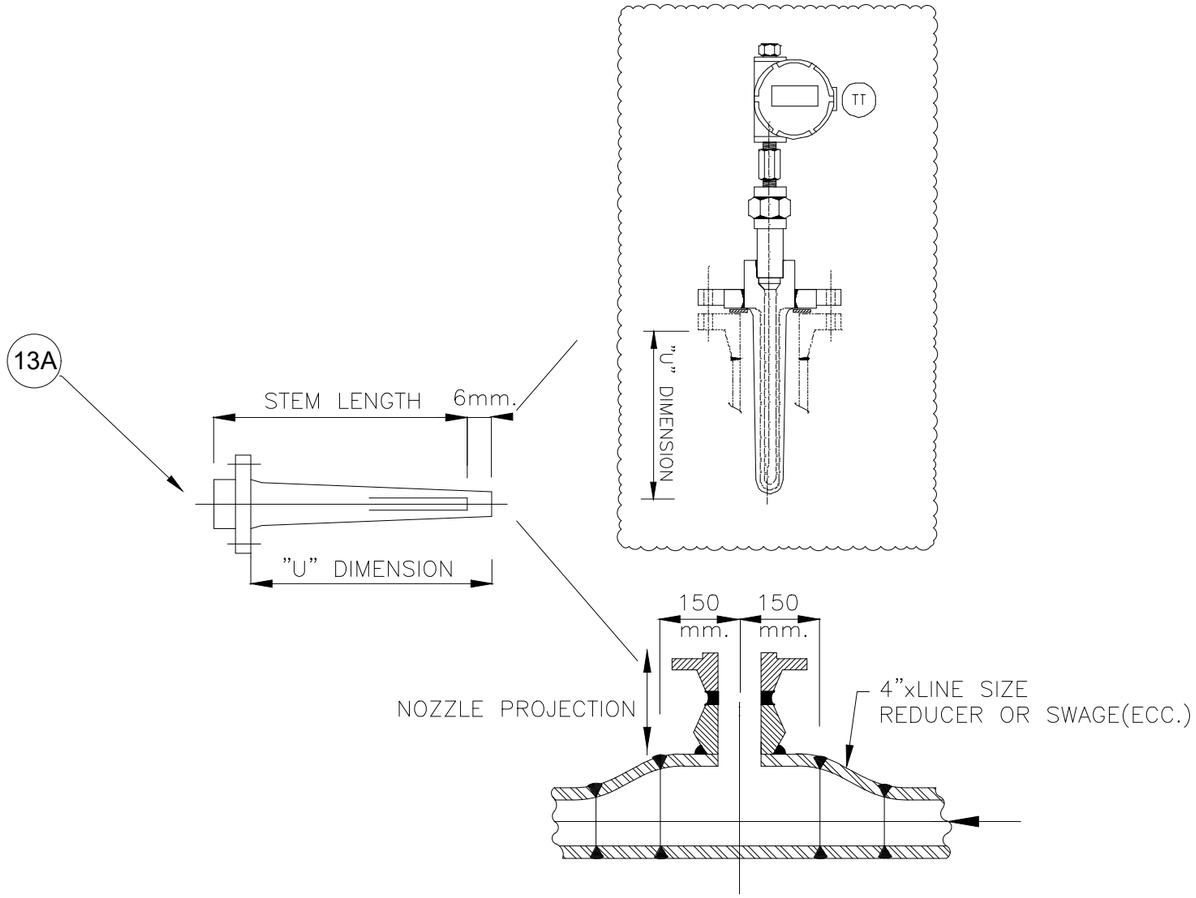

Tag Number	Quantity	Nozzel Projection length mm	WELL "U" mm	STEM LENGTH	REMARK
TT-2122A/B/C	3	162	300	340	FLUID: SOUR GAS
TT-2123A/B/C	3	162	260	300	FLUID: SOUR GAS
TT-2132A/B/C	3	162	300	340	FLUID: SOUR GAS
TT-2133A/B/C	3	162	300	340	FLUID: SOUR GAS

ITEM	QTY	SIZE OR CONNECTION	DESCRIPTION	MATERIAL	TOTAL QTY.	REMARK
13A	1	1/2"NPTF x1/2"NPTF	THERMOWELL	AISI 316SS	12	NACE MATERIAL

REFERENCE DRAWINGS	DWG. NUMBER
P&I DIAGRAM	BK-GCS-HY-120-PR-PI-0001-V04
INSTRUMENT DATASHEET/ CERTIFICATES	BK-GCS-HY-120-IN-DS-0001-V02

Note :

Legend :

REV.	DATE	P.O.I.	PREP.	CHK.	APP.	AUT.
V03	Jan.2025	IFR	HAVAYAR Co	M.FAKHARIAN	S.Faramarzpour	
V02	OCT.2024	IFR	HAVAYAR Co	M.FAKHARIAN	M.SADEGHIAN	
V01	MAY.2024	IFR	HAVAYAR Co	M.FAKHARIAN	M.SADEGHIAN	
V00	APR.2024	IFR	HAVAYAR Co	M.FAKHARIAN	A.M.MOHSENI	

REV.	DESCRIPTION	BY	DATE	BY	DATE
		CHECKED		REV. APPR.	

PROJECT NAME: BINAK OILFIELD DEVELOPMENT SURFACE WORK PACKAGES

PROJECT NO.: ---

EPC CONTRACTOR: HIRGAN ENERGY – DESIGN & INSPECTION COMPANIES

EPC/EPD CONTRACTOR: PETROIRAN DEVELOPMENT COMPANY (PEDCO)

THE ORIGINAL AND ALL COPIES OF THIS DRAWING TOGETHER WITH THE COPYRIGHT THEREIN ARE THE SOLE PROPERTY OF N.I.S.O.C./ FIELDS

BINAK OILFIELD DEVELOPMENT SURFACE WORK PACKAGES

DATE	SCALE	DRAWING BY	CHECKED BY	PROJECT ENG.

NO CONSTRUCTION PERMITTED UNLESS DRAWING APPROVED

APPROVED FOR CONSTRUCTION | BY: | DATE:

DRAWING TITLE: HOOK UP DRAWING

SCALE	SIZE	DRAWING NO.	SHEET NO.	REV.
N.T.SC.	A3	BK-GCS-HY-120-IN-DW-0007	11 OF 19	V03

BUDGET REF.	LOCATION	SIZE	CLASS	SERIAL NO.	SHEET	REVISION

HAVAYAR

File No BK-GCS-HY-120-IN-DW-0007-V03.dwg

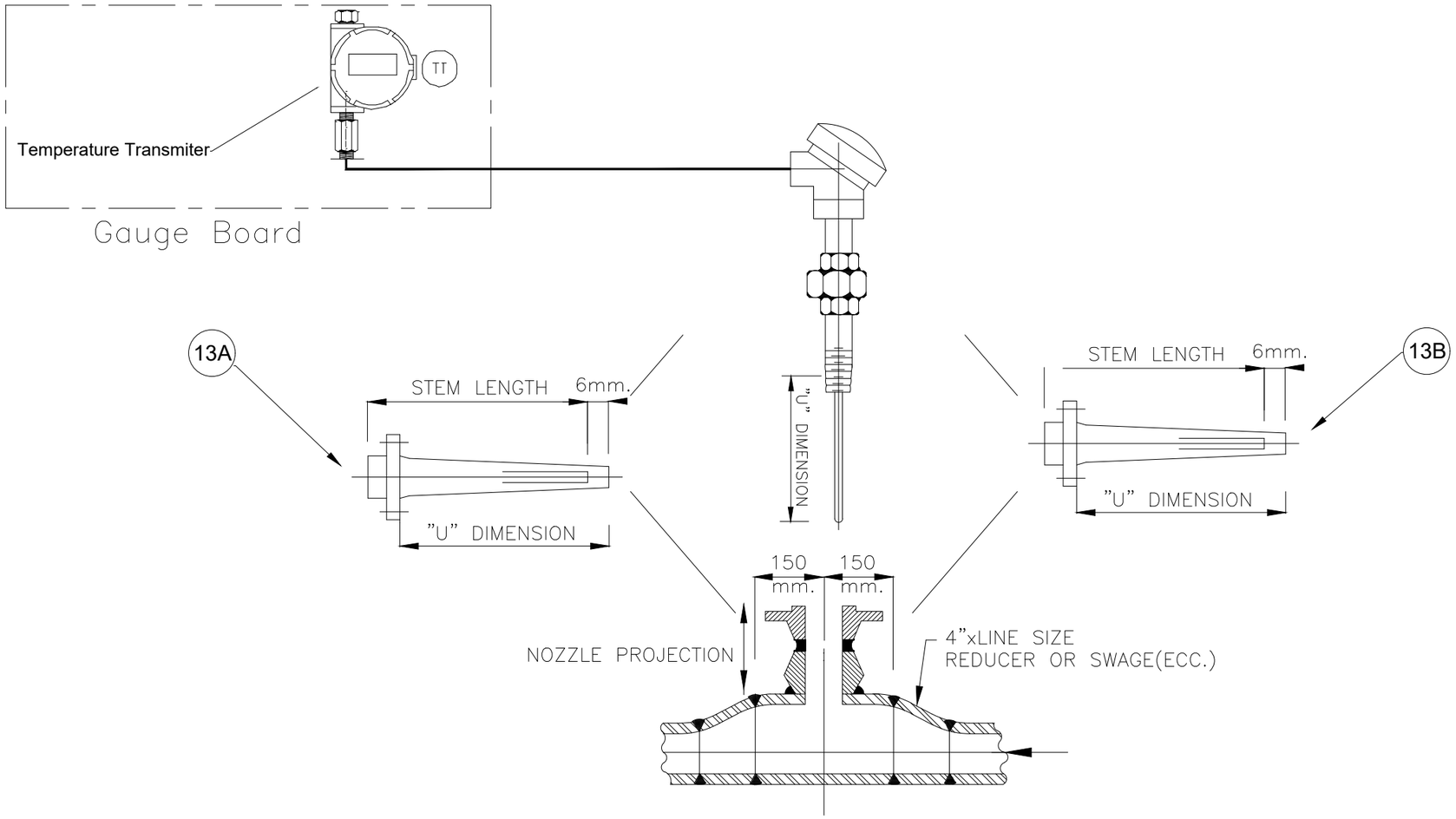

Tag Number	Quantity	Nozzel Projection length mm	WELL "U" mm	STEM LENGTH	REMARK
TT-2204A/B/C	3	170	230	280	FLUID: OIL
TT-2203A/B/C	3	-	200	240	FLUID: OIL
TT-2213A/B/C	3	200	500	540	FLUID: WATER
TT-2191A/B/C	3	200	500	540	FLUID: SOUR GAS
TT-2194A/B/C	3	200	500	540	FLUID: SOUR GAS

ITEM	QTY	SIZE OR CONNECTION	DESCRIPTION	MATERIAL	TOTAL QTY.	REMARK
13A	1	1/2"NPTF x1/2"NPTF	THERMOWELL	AISI 316SS	6	NACE MATERIAL
13B	1	1/2"NPTF x1/2"NPTF	THERMOWELL	AISI 316SS	9	-

REFERENCE DRAWINGS	DWG. NUMBER
P&I DIAGRAM	BK-GCS-HY-120-PR-PI-0001-V04
INSTRUMENT DATASHEET/ CERTIFICATES	BK-GCS-HY-120-IN-DS-0001-V02

Note :

Legend :

REV.	DATE	P.O.I.	PREP.	CHK.	APP.	AUT.
V03	Jan.2025	IFR	HAVAYAR Co	M.FAKHARIAN	S.Faramarzpour	
V02	OCT.2024	IFR	HAVAYAR Co	M.FAKHARIAN	M.SADEGHIAN	
V01	MAY.2024	IFR	HAVAYAR Co	M.FAKHARIAN	M.SADEGHIAN	
V00	APR.2024	IFR	HAVAYAR Co	M.FAKHARIAN	A.M.MOHSENI	

REV.	DESCRIPTION	BY	DATE	BY	DATE
		CHECKED		REV. APPR.	

PROJECT NAME: BINAK OILFIELD DEVELOPMENT SURFACE WORK PACKAGES

PROJECT NO.: ---

در اساس پروژه چهت تدفین قطعات علی شرکت به قلاشتم مالکیت او چی و هرقی این اوه چمن هیلک و اجمال.

THE ORIGINAL AND ALL COPIES OF THIS DRAWING TOGETHER WITH THE COPYRIGHT THEREIN ARE THE SOLE PROPERTY OF N.I.S.O.C./ FIELDS

EPC CONTRACTOR: HIRGAN ENERGY – DESIGN & INSPECTION COMPANIES

EPC/EPD CONTRACTOR: PETROIRAN DEVELOPMENT COMPANY (PEDCO)

BINAK OILFIELD DEVELOPMENT SURFACE WORK PACKAGES

DATE	SCALE	DRAWING BY	CHECKED BY	PROJECT ENG.

HAVAYAR

DRAWING TITLE: HOOK UP DRAWING

NO CONSTRUCTION PERMITTED UNLESS DRAWING APPROVED

APPROVED FOR CONSTRUCTION BY: DATE:

SCALE	SIZE	DRAWING NO.	SHEET NO.	REV.
N.T.SC.	A3	BK-GCS-HY-120-IN-DW-0007	12 OF 19	V03

BUDGET REF.	LOCATION	SIZE	CLASS	SERIAL NO.	SHEET	REVISION

Software Autocad File No BK-GCS-HY-120-IN-DW-0007-V03.dwg

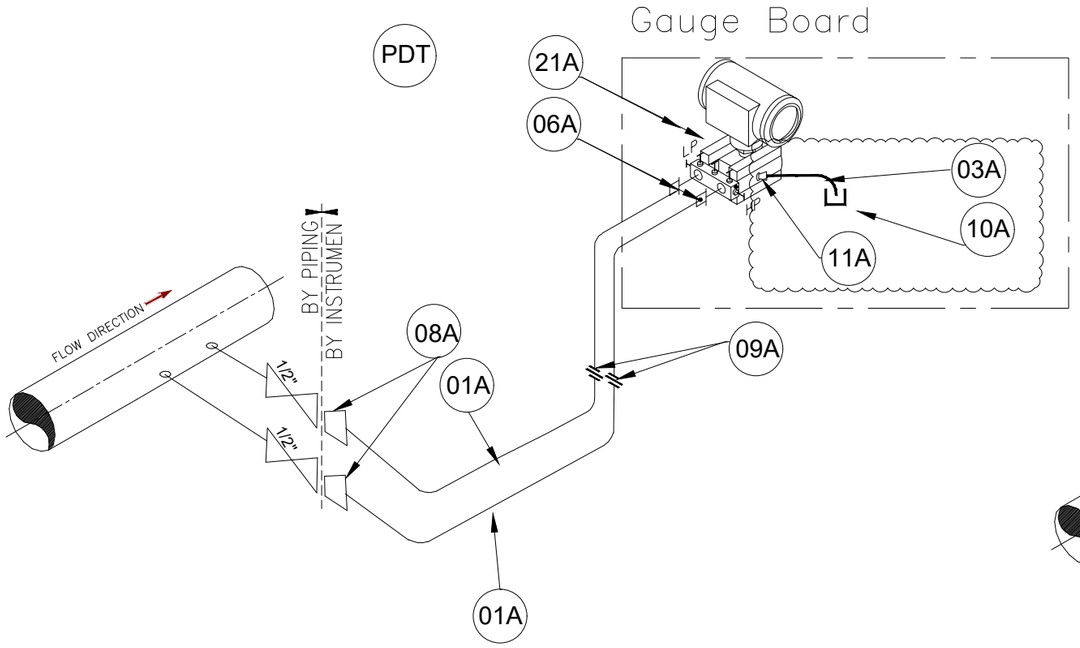

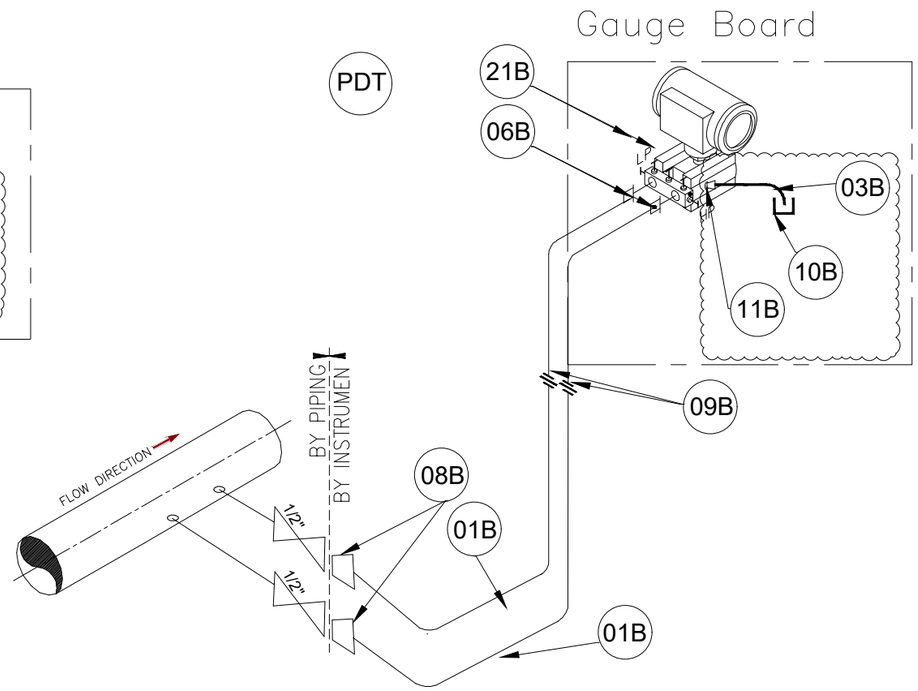

Tag Number	Quantity	REMARK
PDT-2122A/B/C	3	FLUID: SOUR GAS
PDT-2132A/B/C	3	FLUID: SOUR GAS

Tag Number	Quantity	REMARK
PDT-2204A/B/C	3	FLUID: OIL

ITEM	QTY	SIZE OR CONNECTION	DESCRIPTION	Rating Class	MATERIAL	TOTAL QTY.	REMARK
01A	8m	1/2" O.D	TUBING, SEAMLESS, WALL THICKNESS 0.065"	#6000	AISI 316SS	48m	NACE MATERTIAL
03A	0.2m	1/4"NPTM	HEX HEAD PLUG	#6000	AISI 316SS	0.6m	NACE MATERIAL
06A	2	1/2" NPTM x 1/2" O.D	DOUBLE FERRULE COMPRESSION TYPE MALE CONNECTOR	#6000	AISI 316SS	12	NACE MATERTIAL
08A	2	1/2" NPTFx 1/2" O.D	DOUBLE FERRULE COMPRESSION TYPE FEMALE CONNECTOR	#6000	AISI 316SS	12	NACE MATERTIAL
09A	2	1/2" O.D	STRAIGHT UNION COMPRESSION TYPE DOUBLE FERRULE	#6000	AISI 316SS	12	NACE MATERTIAL
10A	1	1/4"	TUBE CAP	#6000	AISI 316SS	6	NACE MATERIAL
11A	1	1/4" NPTM x 1/4" O.D	DOUBLE FERRULE COMPRESSION TYPE MALE CONNECTOR	#6000	AISI 316SS	6	NACE MATERIAL
21A	1	2x1/2"NPTF + 1/4"	MANIFOLD,5 WAY 3 VALVE	#6000	AISI 316SS	6	NACE MATERTIAL
01B	8m	1/2" O.D	TUBING, SEAMLESS, WALL THICKNESS 0.065"	#6000	AISI 316SS	24m	-
03B	0.2m	1/4"NPTM	HEX HEAD PLUG	#6000	AISI 316SS	0.6m	-
06B	2	1/2" NPTM x 1/2" O.D	DOUBLE FERRULE COMPRESSION TYPE MALE CONNECTOR	#6000	AISI 316SS	6	-
08B	2	1/2" NPTFx 1/2" O.D	DOUBLE FERRULE COMPRESSION TYPE FEMALE CONNECTOR	#6000	AISI 316SS	6	-
09B	2	1/2" O.D	STRAIGHT UNION COMPRESSION TYPE DOUBLE FERRULE	#6000	AISI 316SS	6	-
10B	1	1/4"	TUBE CAP	#6000	AISI 316SS	6	-
11B	1	1/4" NPTM x 1/4" O.D	DOUBLE FERRULE COMPRESSION TYPE MALE CONNECTOR	#6000	AISI 316SS	6	-
21B	1	2x1/2"NPTF + 1/4"	MANIFOLD,5 WAY 3 VALVE	#6000	AISI 316SS	3	-

REFERENCE DRAWINGS	DWG. NUMBER
P&I DIAGRAM	BK-GCS-HY-120-PR-PI-0001-V04
INSTRUMENT DATASHEET/ CERTIFICATES	BK-GCS-HY-120-IN-DS-0001-V02

Note :

Legend :

REV.	DATE	P.O.I.	PREP.	CHK.	APP.	AUT.
V03	Jan.2025	IFR	HAVAYAR Co	M.FAKHARIAN	S.Faramarzpour	
V02	OCT.2024	IFR	HAVAYAR Co	M.FAKHARIAN	M.SADEGHIAN	
V01	MAY.2024	IFR	HAVAYAR Co	M.FAKHARIAN	M.SADEGHIAN	
V00	APR.2024	IFR	HAVAYAR Co	M.FAKHARIAN	A.M.MOHSENI	

REV.	DESCRIPTION	BY	DATE	BY	DATE
		CHECKED		REV. APPR.	

PROJECT NAME: BINAK OILFIELD DEVELOPMENT SURFACE WORK PACKAGES

PROJECT NO.: ---

EPC CONTRACTOR: HIRGAN ENERGY – DESIGN & INSPECTION COMPANIES

EPC/EPD CONTRACTOR: PETROIRAN DEVELOPMENT COMPANY — PEDCO

دارایی‌های پروژه چون نقش‌ها، طراحی‌ها، مشخصات فنی و مشابه این‌ها، حسن نیکوکار و اجرا
THE ORIGINAL AND ALL COPIES OF THIS DRAWING TOGETHER WITH THE COPYRIGHT THEREIN ARE THE SOLE PROPERTY OF N.I.S.O.C./ FIELDS

BINAK OILFIELD DEVELOPMENT SURFACE WORK PACKAGES

DATE	SCALE	DRAWING BY	CHECKED BY	PROJECT ENG.

NO CONSTRUCTION PERMITTED UNLESS DRAWING APPROVED

APPROVED FOR CONSTRUCTION | BY: | DATE:

DRAWING TITLE: HOOK UP DRAWING

SCALE	SIZE	DRAWING NO.	SHEET NO.	REV.
N.T.S.C.	A3	BK-GCS-HY-120-IN-DW-0007	13 OF 19	V03

BUDGET REF.	LOCATION	SIZE	CLASS	SERIAL NO.	SHEET	REVISION

HAVAYAR

File No: BK-GCS-HY-120-IN-DW-0007-V03.dwg

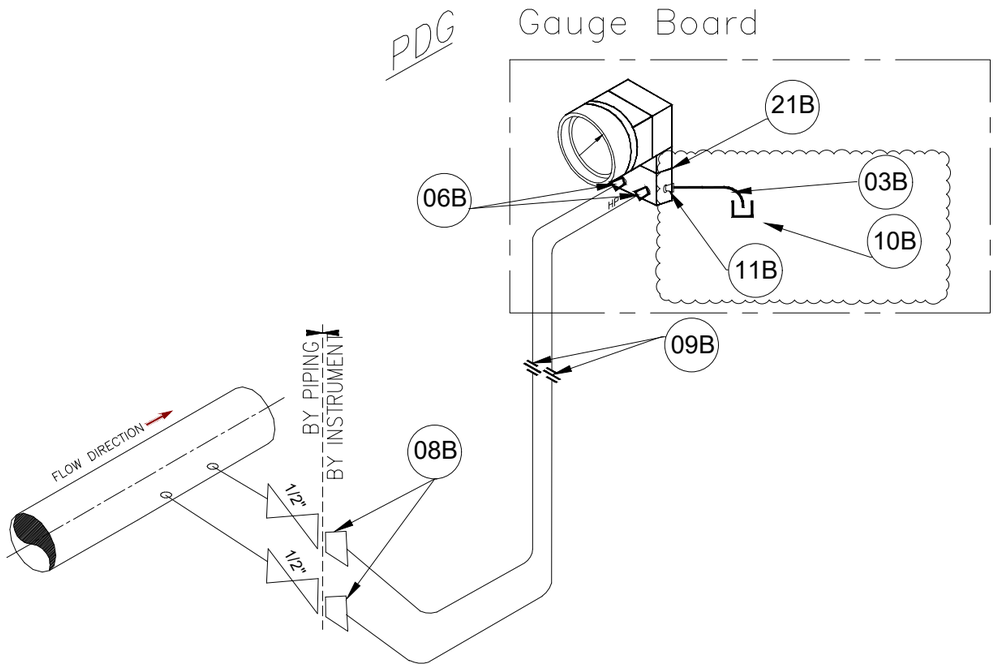

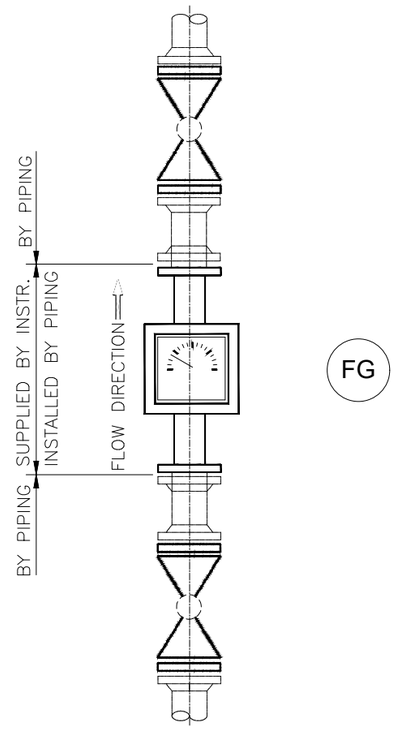

Tag Number	Quantity	REMARK
PDG-2200A/B/C	3	FLUID: OIL
PDG-2204A/B/C	3	FLUID: OIL
PDG-2205A/B/C	3	FLUID:WATER
PDG-2206A/B/C	3	FLUID:WATER

Tag Number	Quantity	REMARK
FI-2200A/B/C	3	FLUID: GAS(N2)
FI-2201A/B/C	3	FLUID: GAS(N2)
FI-2202A/B/C	3	FLUID: GAS(N2)
FI-2203A/B/C	3	FLUID: GAS(N2)

ITEM	QTY	SIZE OR CONNECTION	DESCRIPTION	Rating Class	MATERIAL	TOTAL QTY.	REMARK
01B	8m	1/2" O.D	TUBING, SEAMLESS, WALL THICKNESS 0.065"	#6000	AISI 316SS	96m	-
03B	0.2m	1/4"NPTM	HEX HEAD PLUG	#6000	AISI 316SS	2.4m	-
06B	2	1/2" NPTM x 1/2" O.D	DOUBLE FERRULE COMPRESSION TYPE MALE CONNECTOR	#6000	AISI 316SS	24	-
08B	2	1/2" NPTFx 1/2" O.D	DOUBLE FERRULE COMPRESSION TYPE FEMALE CONNECTOR	#6000	AISI 316SS	24	-
09B	2	1/2" O.D	STRAIGHT UNION COMPRESSION TYPE DOUBLE FERRULE	#6000	AISI 316SS	24	-
10B	1	1/4"	TUBE CAP	#6000	AISI 316SS	12	-
11B	1	1/4" NPTM x 1/4" O.D	DOUBLE FERRULE COMPRESSION TYPE MALE CONNECTOR	#6000	AISI 316SS	12	-
21B	1	2x1/2"NPTF + 1/4"NPTF	MANIFOLD,5 WAY 3 VALVE	#6000	AISI 316SS	12	-

REFERENCE DRAWINGS	DWG. NUMBER
P&I DIAGRAM	BK-GCS-HY-120-PR-PI-0001-V04
INSTRUMENT DATASHEET/ CERTIFICATES	BK-GCS-HY-120-IN-DS-0001-V02

Note :

Legend :

REV.	DATE	P.O.I.	PREP.	CHK.	APP.	AUT.
V03	Jan.2025	IFR	HAVAYAR Co	M.FAKHARIAN	S.Faramarzpour	
V02	OCT.2024	IFR	HAVAYAR Co	M.FAKHARIAN	M.SADEGHIAN	
V01	MAY.2024	IFR	HAVAYAR Co	M.FAKHARIAN	M.SADEGHIAN	
V00	APR.2024	IFR	HAVAYAR Co	M.FAKHARIAN	A.M.MOHSENI	

REV.	DESCRIPTION	CHECKED BY	CHECKED DATE	REV. APPR. BY	REV. APPR. DATE

PROJECT NAME: BINAK OILFIELD DEVELOPMENT SURFACE WORK PACKAGES

PROJECT NO.: ---

EPC CONTRACTOR: HIRGAN ENERGY — HIRGAN ENERGY – DESIGN & INSPECTION COMPANIES

EPC/EPD CONTRACTOR: PEDCO — PETROIRAN DEVELOPMENT COMPANY

THE ORIGINAL AND ALL COPIES OF THIS DRAWING TOGETHER WITH THE COPYRIGHT THEREIN ARE THE SOLE PROPERTY OF N.I.S.O.C./ FIELDS

BINAK OILFIELD DEVELOPMENT SURFACE WORK PACKAGES

DATE	SCALE	DRAWING BY	CHECKED BY	PROJECT ENG.

HAVAYAR

DRAWING TITLE: HOOK UP DRAWING

NO CONSTRUCTION PERMITTED UNLESS DRAWING APPROVED

APPROVED FOR CONSTRUCTION | BY: | DATE:

SCALE	SIZE	DRAWING NO.	SHEET NO.	REV.
N.T.SC.	A3	BK-GCS-HY-120-IN-DW-0007	14 OF 19	V03

BUDGET REF.	LOCATION	SIZE	CLASS	SERIAL NO.	SHEET	REVISION

Software Autocad File No BK-GCS-HY-120-IN-DW-0007-V03.dwg

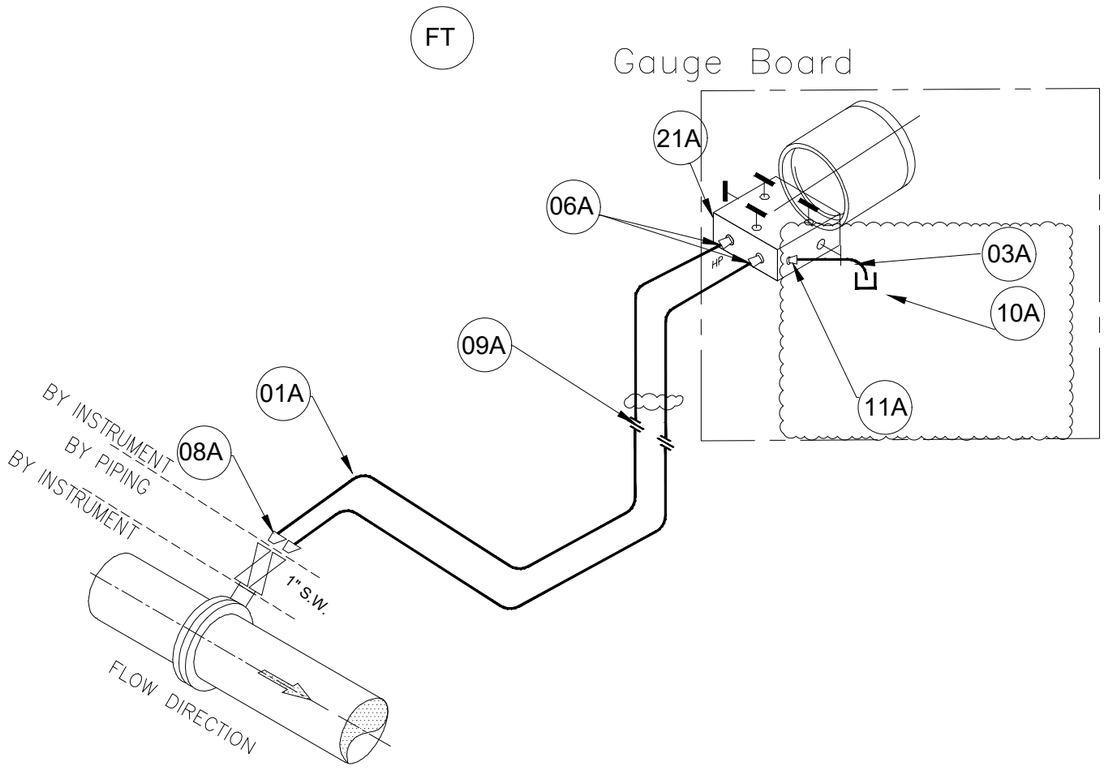

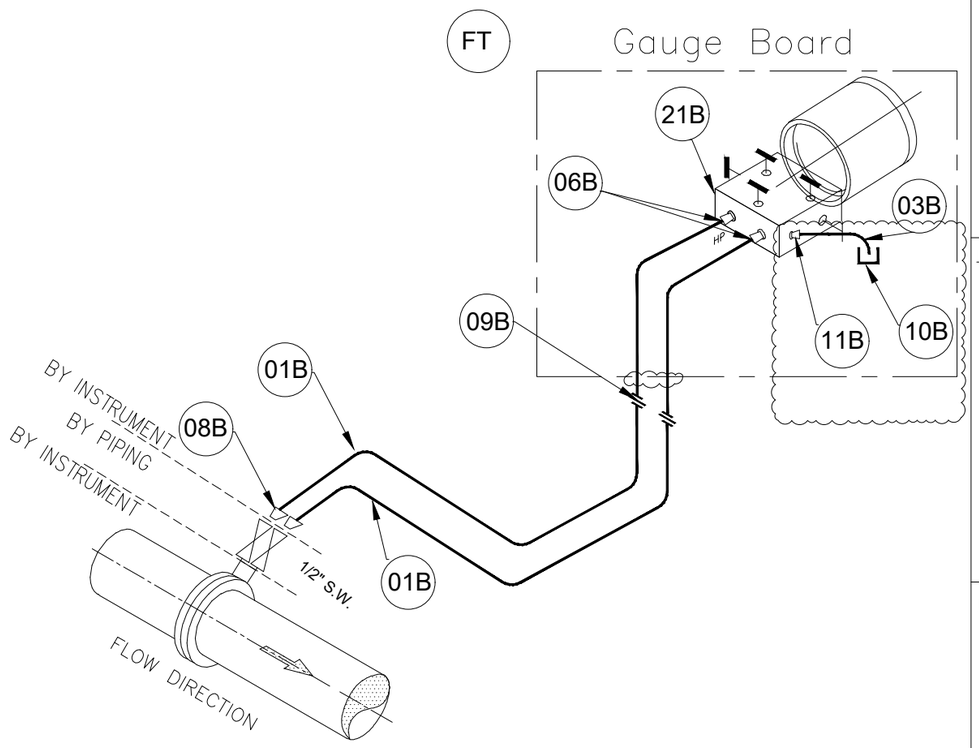

Tag Number	Quantity	REMARK
FT-2121A/B/C	3	FLUID: SOUR GAS
FT-2131A/B/C	3	FLUID: SOUR GAS

Tag Number	Quantity	REMARK
FT-2206A/B/C	3	FLUID: WATER

ITEM	QTY	SIZE OR CONNECTION	DESCRIPTION	Rating Class	MATERIAL	TOTAL QTY.	REMARK
01A	8m	1/2" O.D	TUBING, SEAMLESS, WALL THICKNESS 0.065"	#6000	AISI 316SS	24m	NACE MATERTIAL
03A	0.2m	1/4"NPTM	HEX HEAD PLUG	#6000	AISI 316SS	0.3m	NACE MATERIAL
06A	2	1/2" NPTM x 1/2" O.D	DOUBLE FERRULE COMPRESSION TYPE MALE CONNECTOR	#6000	AISI 316SS	12	NACE MATERTIAL
08A	2	1/2" NPTFx 1/2" O.D	DOUBLE FERRULE COMPRESSION TYPE FEMALE CONNECTOR	#6000	AISI 316SS	12	NACE MATERTIAL
09A	2	1/2" O.D	STRAIGHT UNION COMPRESSION TYPE DOUBLE FERRULE	#6000	AISI 316SS	12	NACE MATERTIAL
10A	1	1/4"	TUBE CAP	#6000	AISI 316SS	6	NACE MATERIAL
11A	1	1/4" NPTM x 1/4" O.D	DOUBLE FERRULE COMPRESSION TYPE MALE CONNECTOR	#6000	AISI 316SS	6	NACE MATERIAL
21A	1	2x1/2"NPTF + 1/4"	MANIFOLD,5 WAY 3 VALVE	#6000	AISI 316SS	6	NACE MATERTIAL
01B	8m	1/2" O.D	TUBING, SEAMLESS, WALL THICKNESS 0.065"	#6000	AISI 316SS	12m	-
03B	0.2m	1/4"NPTM	HEX HEAD PLUG	#6000	AISI 316SS	0.6m	-
06B	2	1/2" NPTM x 1/2" O.D	DOUBLE FERRULE COMPRESSION TYPE MALE CONNECTOR	#6000	AISI 316SS	6	-
08B	2	1/2" NPTFx 1/2" O.D	DOUBLE FERRULE COMPRESSION TYPE FEMALE CONNECTOR	#6000	AISI 316SS	6	-
09B	2	1/2" O.D	STRAIGHT UNION COMPRESSION TYPE DOUBLE FERRULE	#6000	AISI 316SS	6	-
10B	1	1/4"	TUBE CAP	#6000	AISI 316SS	3	-
11B	1	1/4" NPTM x 1/4" O.D	DOUBLE FERRULE COMPRESSION TYPE MALE CONNECTOR	#6000	AISI 316SS	3	-
21B	1	2x1/2"NPTF + 1/4"	MANIFOLD,5 WAY 3 VALVE	#6000	AISI 316SS	3	-

REFERENCE DRAWINGS	DWG. NUMBER
P&I DIAGRAM	BK-GCS-HY-120-PR-PI-0001-V04
INSTRUMENT DATASHEET/ CERTIFICATES	BK-GCS-HY-120-IN-DS-0001-V02

Note :

Legend :

REV.	DATE	P.O.I.	PREP.	CHK.	APP.	AUT.
V03	Jan.2025	IFR	HAVAYAR Co	M.FAKHARIAN	S.Faramarzpour	
V02	OCT.2024	IFR	HAVAYAR Co	M.FAKHARIAN	M.SADEGHIAN	
V01	MAY.2024	IFR	HAVAYAR Co	M.FAKHARIAN	M.SADEGHIAN	
V00	APR.2024	IFR	HAVAYAR Co	M.FAKHARIAN	A.M.MOHSENI	

REV.	DESCRIPTION	BY	DATE	BY	DATE
		CHECKED		REV. APPR.	

PROJECT NAME: BINAK OILFIELD DEVELOPMENT SURFACE WORK PACKAGES

PROJECT NO.: ---

EPC CONTRACTOR: HIRGAN ENERGY – DESIGN & INSPECTION COMPANIES

EPC/EPD CONTRACTOR: PETROIRAN DEVELOPMENT COMPANY (PEDCO)

این نقشه و کلیه اطلاعات مندرج در آن متعلق به شرکت ملی مناطق نفتخیز جنوب می باشد

THE ORIGINAL AND ALL COPIES OF THIS DRAWING TOGETHER WITH THE COPYRIGHT THEREIN ARE THE SOLE PROPERTY OF N.I.S.O.C./ FIELDS

BINAK OILFIELD DEVELOPMENT SURFACE WORK PACKAGES

DATE	SCALE	DRAWING BY	CHECKED BY	PROJECT ENG.

NO CONSTRUCTION PERMITTED UNLESS DRAWING APPROVED

APPROVED FOR CONSTRUCTION | BY: | DATE:

DRAWING TITLE: HOOK UP DRAWING

SCALE	SIZE	DRAWING NO.	SHEET NO.	REV.
N.T.S.C.	A3	BK-GCS-HY-120-IN-DW-0007	15 OF 19	V03

BUDGET REF.	LOCATION	SIZE	CLASS	SERIAL NO.	SHEET	REVISION

HAVAYAR

File No: BK-GCS-HY-120-IN-DW-0007-V03.dwg

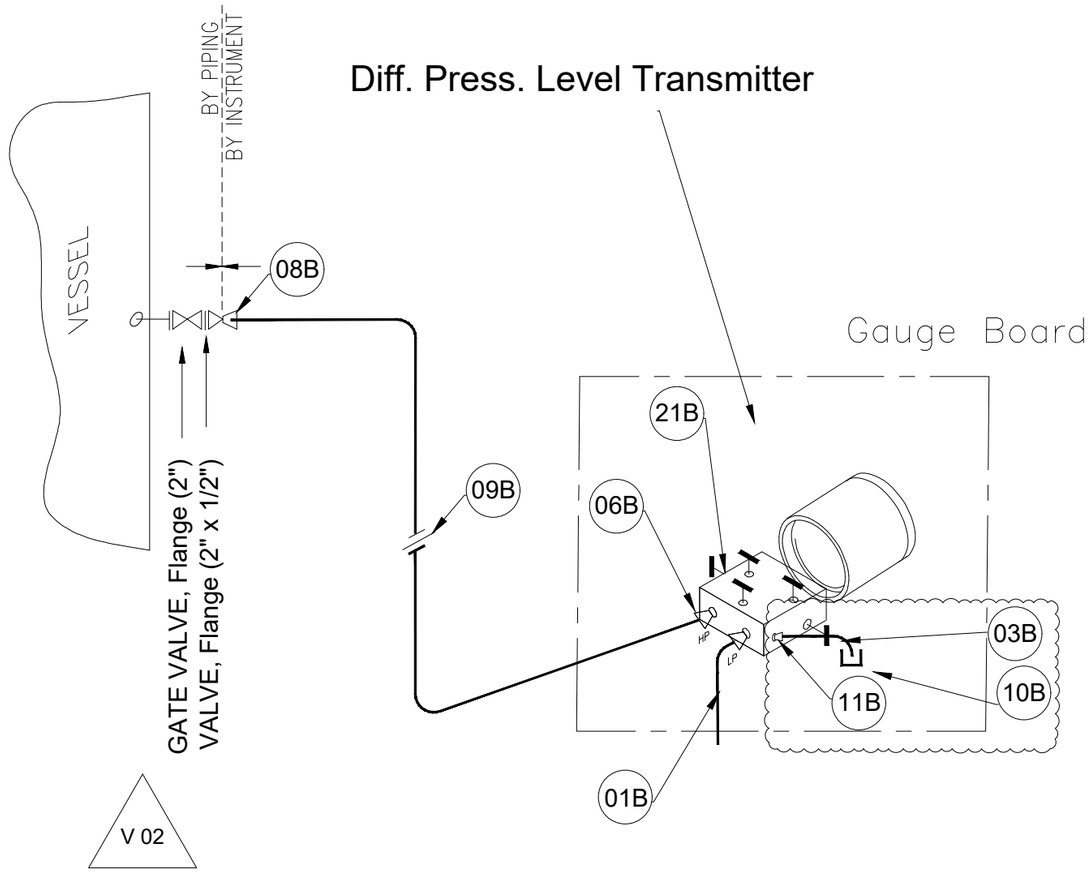

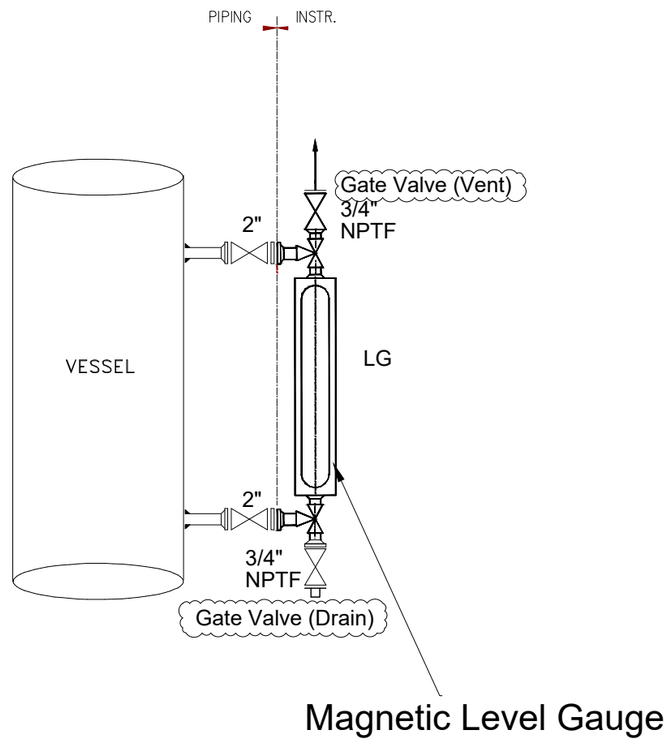

Tag Number	Quantity	REMARK
LG-2213A/B/C	3	FLUID: WATER

Tag Number	Quantity	REMARK
LT-2213A/B/C	3	FLUID: WATER
LT-2200A/B/C	3	FLUID: WATER

ITEM	QTY	SIZE OR CONNECTION	DESCRIPTION	Rating Class	MATERIAL	TOTAL QTY.	REMARK
01B	8m	1/2" O.D	TUBING, SEAMLESS, WALL THICKNESS 0.065"	#6000	AISI 316SS	48m	-
03B	0.2m	1/4"NPTM	HEX HEAD PLUG	#6000	AISI 316SS	1.2m	-
06B	2	1/2" NPTM x 1/2" O.D	DOUBLE FERRULE COMPRESSION TYPE MALE CONNECTOR	#6000	AISI 316SS	12	-
08B	2	1/2" NPTFx 1/2" O.D	DOUBLE FERRULE COMPRESSION TYPE FEMALE CONNECTOR	#6000	AISI 316SS	12	-
09B	2	1/2" O.D	STRAIGHT UNION COMPRESSION TYPE DOUBLE FERRULE	#6000	AISI 316SS	12	-
10B	1	1/4"	TUBE CAP	#6000	AISI 316SS	6	-
11B	1	1/4" NPTM x 1/4" O.D	DOUBLE FERRULE COMPRESSION TYPE MALE CONNECTOR	#6000	AISI 316SS	6	-
21B	1	2x1/2"NPTF + 1/4"	MANIFOLD,5 WAY 3 VALVE	#6000	AISI 316SS	6	-

REFERENCE DRAWINGS	DWG. NUMBER
P&I DIAGRAM	BK-GCS-HY-120-PR-PI-0001-V04
INSTRUMENT DATASHEET/ CERTIFICATES	BK-GCS-HY-120-IN-DS-0001-V02

Note :

Legend :

REV.	DATE	P.O.I.	PREP.	CHK.	APP.	AUT.
V03	Jan.2025	IFR	HAVAYAR Co	M.FAKHARIAN	S.Faramarzpour	
V02	OCT.2024	IFR	HAVAYAR Co	M.FAKHARIAN	M.SADEGHIAN	
V01	MAY.2024	IFR	HAVAYAR Co	M.FAKHARIAN	M.SADEGHIAN	
V00	APR.2024	IFR	HAVAYAR Co	M.FAKHARIAN	A.M.MOHSENI	

REV.	DESCRIPTION	BY	DATE	BY	DATE
		CHECKED		REV. APPR.	

PROJECT NAME: BINAK OILFIELD DEVELOPMENT SURFACE WORK PACKAGES

PROJECT NO.: ---

EPC CONTRACTOR: HIRGAN ENERGY – DESIGN & INSPECTION COMPANIES

EPC/EPD CONTRACTOR: PETROIRAN DEVELOPMENT COMPANY (PEDCO)

THE ORIGINAL AND ALL COPIES OF THIS DRAWING TOGETHER WITH THE COPYRIGHT THEREIN ARE THE SOLE PROPERTY OF N.I.S.O.C./ FIELDS

BINAK OILFIELD DEVELOPMENT SURFACE WORK PACKAGES

DATE	SCALE	DRAWING BY	CHECKED BY	PROJECT ENG.

DRAWING TITLE: HOOK UP DRAWING

NO CONSTRUCTION PERMITTED UNLESS DRAWING APPROVED

APPROVED FOR CONSTRUCTION | BY: | DATE:

SCALE	SIZE	DRAWING NO.	SHEET NO.	REV.
N.T.SC.	A3	BK-GCS-HY-120-IN-DW-0007	16 OF 19	V03

BUDGET REF.	LOCATION	SIZE	CLASS	SERIAL NO.	SHEET	REVISION

File No BK-GCS-HY-120-IN-DW-0007-V03.dwg

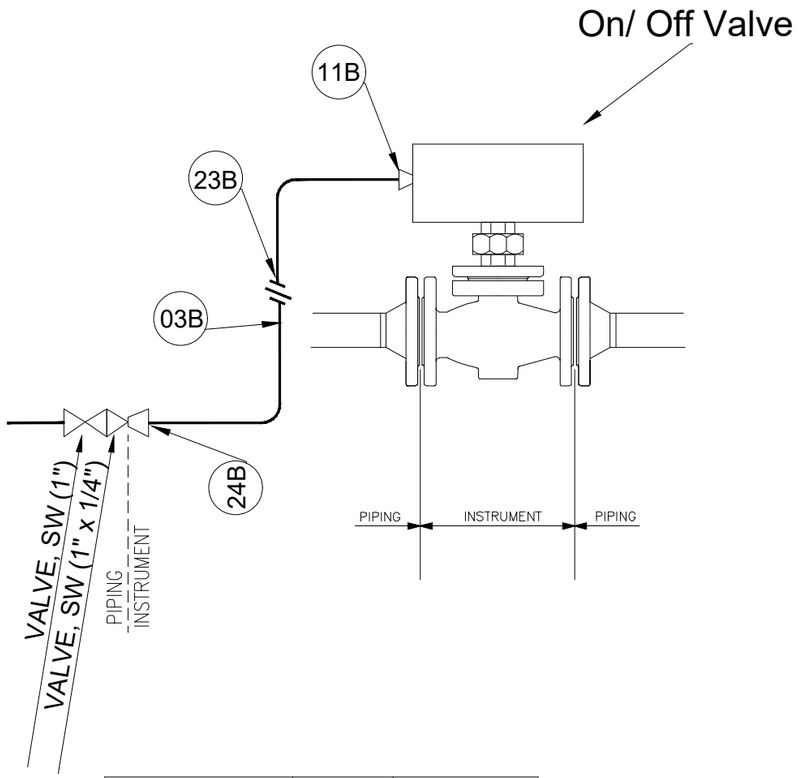

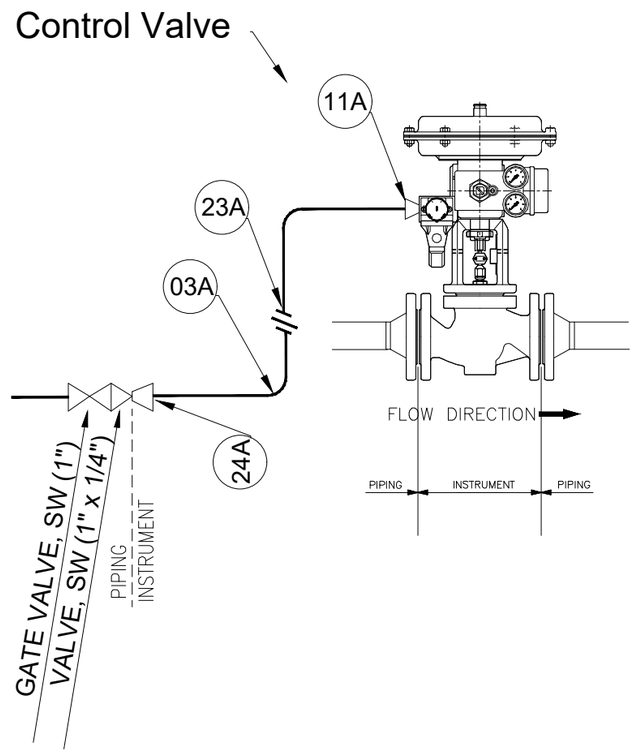

Tag Number	Quantity	REMARK
SV-2201A/B/C	3	FLUID: AIR
SV-2202A/B/C	3	FLUID: AIR
SV-2203A/B/C	3	FLUID: AIR
SV-2204A/B/C	3	FLUID: AIR
SV-2205A/B/C	3	FLUID: AIR

Tag Number	Quantity	REMARK
PCV-2123A/B/C	3	FLUID: SOUR GAS

ITEM	QTY	SIZE OR CONNECTION	DESCRIPTION	Rating Class	MATERIAL	TOTAL QTY.	REMARK
03B	5m	1/4" O.D	TUBING, SEAMLESS, WALL THICKNESS 0.065"	#6000	AISI 316SS	75	-
11B	1	1/4" NPTMx 1/4" O.D	DOUBLE FERRULE COMPRESSION TYPE MALE CONNECTOR	#6000	AISI 316SS	15	-
23B	1	1/4" O.D	STRAIGHT UNION COMPRESSION TYPE DOUBLE FERRULE	#6000	AISI 316SS	15	-
24B	1	1/4" NPTFx 1/4" O.D	DOUBLE FERRULE COMPRESSION TYPE FEMALE CONNECTOR	#6000	AISI 316SS	15	-

ITEM	QTY	SIZE OR CONNECTION	DESCRIPTION	Rating Class	MATERIAL	TOTAL QTY.	REMARK
03A	5m	1/4" O.D	TUBING, SEAMLESS, WALL THICKNESS 0.065"	#6000	AISI 316SS	15m	NACE MATERIAL
11A	1	1/4" NPTMx 1/4" O.D	DOUBLE FERRULE COMPRESSION TYPE MALE CONNECTOR	#6000	AISI 316SS	3	NACE MATERIAL
23A	1	1/4" O.D	TUBING, SEAMLESS, WALL THICKNESS 0.065"	#6000	AISI 316SS	3	NACE MATERIAL
24A	1	1/4" NPTFx 1/4" O.D	STRAIGHT UNION COMPRESSION TYPE DOUBLE FERRULE	#6000	AISI 316SS	3	NACE MATERIAL

REFERENCE DRAWINGS	DWG. NUMBER
P&I DIAGRAM	BK-GCS-HY-120-PR-PI-0001-V04
INSTRUMENT DATASHEET/ CERTIFICATES	BK-GCS-HY-120-IN-DS-0001-V02

Note :

Legend :

REV.	DATE	P.O.I.	PREP.	CHK.	APP.	AUT.
V03	Jan.2025	IFR	HAVAYAR Co	M.FAKHARIAN	S.Faramarzpour	
V02	OCT.2024	IFR	HAVAYAR Co	M.FAKHARIAN	M.SADEGHIAN	
V01	MAY.2024	IFR	HAVAYAR Co	M.FAKHARIAN	M.SADEGHIAN	
V00	APR.2024	IFR	HAVAYAR Co	M.FAKHARIAN	A.M.MOHSENI	

REV.	DESCRIPTION	BY	DATE	BY	DATE
		CHECKED		REV. APPR.	

PROJECT NAME: BINAK OILFIELD DEVELOPMENT SURFACE WORK PACKAGES

PROJECT NO.: ---

EPC CONTRACTOR: HIRGAN ENERGY – DESIGN & INSPECTION COMPANIES

EPC/EPD CONTRACTOR: PETROIRAN DEVELOPMENT COMPANY (PEDCO)

دارنده این نقشه و هرگونه کپی و یا هرگونه استفاده از آن بدون موافقت کتبی شرکت ملی نفت ایران
THE ORIGINAL AND ALL COPIES OF THIS DRAWING TOGETHER WITH THE COPYRIGHT THEREIN ARE THE SOLE PROPERTY OF N.I.S.O.C./ FIELDS

BINAK OILFIELD DEVELOPMENT SURFACE WORK PACKAGES

DATE	SCALE	DRAWING BY	CHECKED BY	PROJECT ENG.

NO CONSTRUCTION PERMITTED UNLESS DRAWING APPROVED

APPROVED FOR CONSTRUCTION | BY: | DATE:

DRAWING TITLE: HOOK UP DRAWING

SCALE	SIZE	DRAWING NO.	SHEET NO.	REV.
N.T.SC.	A3	BK-GCS-HY-120-IN-DW-0007	17 OF 19	V03

BUDGET REF.	LOCATION	SIZE	CLASS	SERIAL NO.	SHEET	REVISION

HAVAYAR

File No BK-GCS-HY-120-IN-DW-0007-V03.dwg

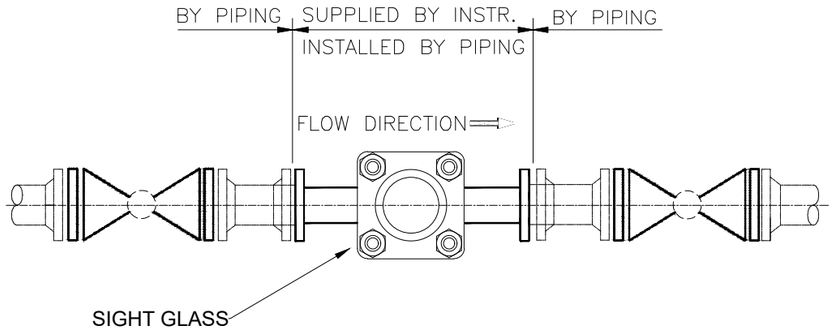

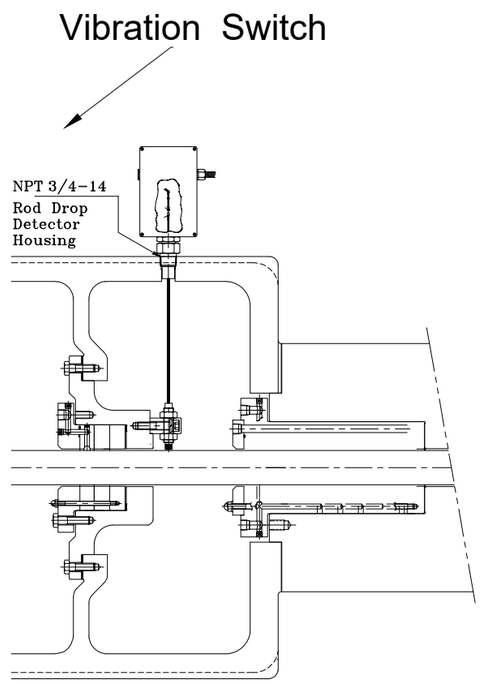

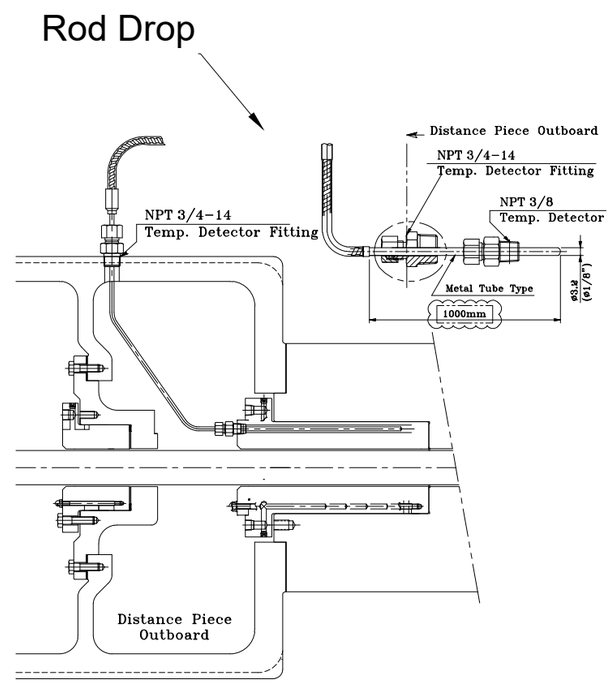

Tag Number	Quantity	REMARK
SG-2200A	3	FLUID: WATER
SG-2201A	3	FLUID: WATER
SG-2202A	3	FLUID: WATER
SG-2203A	3	FLUID: WATER

Tag Number	Quantity	REMARK
VE-2200A	3	-
VE-2201A	3	-
VE-2202A	3	-

Tag Number	Quantity	REMARK
C-ZE-2200A	3	-
C-ZE-2201A	3	-

REFERENCE DRAWINGS	DWG. NUMBER
P&I DIAGRAM	BK-GCS-HY-120-PR-PI-0001-V04
INSTRUMENT DATASHEET/ CERTIFICATES	BK-GCS-HY-120-IN-DS-0001-V02

Note :

Legend :

REV.	DATE	P.O.I.	PREP.	CHK.	APP.	AUT.
V03	Jan.2025	IFR	HAVAYAR Co	M.FAKHARIAN	S.Faramarzpour	
V02	OCT.2024	IFR	HAVAYAR Co	M.FAKHARIAN	M.SADEGHIAN	
V01	MAY.2024	IFR	HAVAYAR Co	M.FAKHARIAN	M.SADEGHIAN	
V00	APR.2024	IFR	HAVAYAR Co	M.FAKHARIAN	A.M.MOHSENI	

REV.	DESCRIPTION	BY	DATE	BY	DATE
		CHECKED		REV. APPR.	

PROJECT NAME: BINAK OILFIELD DEVELOPMENT SURFACE WORK PACKAGES

PROJECT NO.: ---

EPC CONTRACTOR: HIRGAN ENERGY – DESIGN & INSPECTION COMPANIES

EPC/EPD CONTRACTOR: PEDCO — PETROIRAN DEVELOPMENT COMPANY

در اساس‌ی پوچ چوچ تفر قطرات علی شرکت به قرائت ساختاوا چی و پژوهش این اهمیت هیچ‌ن هیکلک و لیمل

THE ORIGINAL AND ALL COPIES OF THIS DRAWING TOGETHER WITH THE COPYRIGHT THEREIN ARE THE SOLE PROPERTY OF N.I.S.O.C./ FIELDS

BINAK OILFIELD DEVELOPMENT SURFACE WORK PACKAGES

DATE	SCALE	DRAWING BY	CHECKED BY	PROJECT ENG.

HAVAYAR

DRAWING TITLE: HOOK UP DRAWING

NO CONSTRUCTION PERMITTED UNLESS DRAWING APPROVED

APPROVED FOR CONSTRUCTION | BY: | DATE:

SCALE	SIZE	DRAWING NO.	SHEET NO.	REV.
N.T.S.C.	A3	BK-GCS-HY-120-IN-DW-0007	18 OF 19	V03

BUDGET REF.	LOCATION	SIZE	CLASS	SERIAL NO.	SHEET	REVISION

Software Autocad File No BK-GCS-HY-120-IN-DW-0007-V03.dwg

ITEM	QTY	SIZE OR CONNECTION	DESCRIPTION	Rating Class	MATERIAL	TOTAL QTY.	REMARK
01A	4m	1/2" O.D	TUBING, SEAMLESS, WALL THICKNESS 0.065"	#6000	AISI 316SS	156m	NACE MATERIAL
01B	4m	1/2" O.D	TUBING, SEAMLESS, WALL THICKNESS 0.065"	#6000	AISI 316SS	216m	-
03A	0.2m	1/4" O.D	TUBING, SEAMLESS, WALL THICKNESS 0.065"	#6000	AISI 316SS	21.3	NACE MATERIAL
03B	0.2m	1/4" O.D	TUBING, SEAMLESS, WALL THICKNESS 0.065"	#6000	AISI 316SS	66m	-
06A	2	1/2" NPTM x 1/2" O.D	DOUBLE FERRULE COMPRESSION TYPE MALE CONNECTOR	#6000	AISI 316SS	45	NACE MATERTIAL
06B	2	1/2" NPTM x 1/2" O.D	DOUBLE FERRULE COMPRESSION TYPE MALE CONNECTOR	#6000	AISI 316SS	66	-
08A	1	1/2" NPTFx 1/2" O.D	DOUBLE FERRULE COMPRESSION TYPE FEMALE CONNECTOR	#6000	AISI 316SS	45	NACE MATERIAL
08B	1	1/2" NPTFx 1/2" O.D	DOUBLE FERRULE COMPRESSION TYPE FEMALE CONNECTOR	#6000	AISI 316SS	66	-
09A	2	1/2" O.D	STRAIGHT UNION COMPRESSION TYPE DOUBLE FERRULE	#6000	AISI 316SS	45	NACE MATERTIAL
09B	1	1/2" O.D	STRAIGHT UNION COMPRESSION TYPE DOUBLE FERRULE	#6000	AISI 316SS	66	-
10A	1	1/4"	TUBE CAP	#6000	AISI 316SS	60	NACE MATERIAL
10B	1	1/4"	TUBE CAP	#6000	AISI 316SS	72	-
11A	1	1/4" NPTM x 1/4" O.D	DOUBLE FERRULE COMPRESSION TYPE MALE CONNECTOR	#6000	AISI 316SS	63	NACE MATERIAL
11B	1	1/4" NPTM x 1/4" O.D	DOUBLE FERRULE COMPRESSION TYPE MALE CONNECTOR	#6000	AISI 316SS	87	-
13A	1	1/2"NPTF x1/2"NPTF	THERMOWELL	#300	AISI 316SS	39	NACE MATERIAL
13B	1	1/2"NPTF x1/2"NPTF	THERMOWELL	#300	AISI 316SS	24	-
19A	1	2x1/2"NPTF + 1/4"NPTF	MANIFOLD,3 WAY 2 VALVE	#6000	AISI 316SS	45	NACE MATERIAL
19B	1	2x1/2"NPTF + 1/4"NPTF	MANIFOLD,3 WAY 2 VALVE	#6000	AISI 316SS	45	-
20A	1	1/2"NPTM x 1/2"NPTF	OVER RANGE PROTECTION	#6000	AISI 316SS	6	NACE MATERIAL
21A	1	2x1/2"NPTF + 1/4"	MANIFOLD,5 WAY 3 VALVE	#6000	AISI 316SS	12	NACE MATERTIAL
21B	1	2x1/2"NPTF + 1/4"NPTF	MANIFOLD,5 WAY 3 VALVE	#6000	AISI 316SS	24	-
23A	1	1/4" O.D	TUBING, SEAMLESS, WALL THICKNESS 0.065"	#6000	AISI 316SS	3	NACE MATERIAL
23B	1	1/4" O.D	STRAIGHT UNION COMPRESSION TYPE DOUBLE FERRULE	#6000	AISI 316SS	15	-
24A	1	1/4" NPTFx 1/4" O.D	STRAIGHT UNION COMPRESSION TYPE DOUBLE FERRULE	#6000	AISI 316SS	3	NACE MATERIAL
24B	1	1/4" NPTFx 1/4" O.D	DOUBLE FERRULE COMPRESSION TYPE FEMALE CONNECTOR	#6000	AISI 316SS	15	-
25A	1	1/2" NPTF x 1/2" NPTM	COOLING ELEMENT	#6000	AISI 316SS	12	NACE MATERIAL
26B	1	1/2"NPTF x 1/2"NPTM	SNUBER	#6000	AISI 316SS	6	-
27A	1	2"	BLIND FLANGE	#300	AISI 316SS	15	NACE MATERIAL
27B	1	2"	BLIND FLANGE	#300	AISI 316SS	3	-
28A	1	2" SW	Elbow 90		AISI 316SS	15	NACE MATERIAL
28B	1	1" SW	Elbow 90		AISI 316SS	3	-

REFERENCE DRAWINGS	DWG. NUMBER
P&I DIAGRAM	BK-GCS-HY-120-PR-PI-0001-V04
INSTRUMENT DATASHEET/ CERTIFICATES	BK-GCS-HY-120-IN-DS-0001-V02

Note :

Legend :

REV.	DATE	P.O.I.	PREP.	CHK.	APP.	AUT.
V03	Jan.2025	IFR	HAVAYAR Co	M.FAKHARIAN	S.Faramarzpour	
V02	OCT.2024	IFR	HAVAYAR Co	M.FAKHARIAN	M.SADEGHIAN	
V01	MAY.2024	IFR	HAVAYAR Co	M.FAKHARIAN	M.SADEGHIAN	
V00	APR.2024	IFR	HAVAYAR Co	M.FAKHARIAN	A.M.MOHSENI	

REV.	DESCRIPTION	CHECKED BY	CHECKED DATE	REV. APPR. BY	REV. APPR. DATE

PROJECT NAME: BINAK OILFIELD DEVELOPMENT SURFACE WORK PACKAGES

PROJECT NO.: ---

EPC CONTRACTOR: HIRGAN ENERGY – DESIGN & INSPECTION COMPANIES

EPC/EPD CONTRACTOR: PEDCO — PETROIRAN DEVELOPMENT COMPANY

این نقشه و کلیه حقوق مادی و معنوی آن متعلق به شرکت ملی حفاری ایران است و چاپ و پخش آن بدون اجازه کتبی مجاز نمی باشد

THE ORIGINAL AND ALL COPIES OF THIS DRAWING TOGETHER WITH THE COPYRIGHT THEREIN ARE THE SOLE PROPERTY OF N.I.S.O.C./ FIELDS

BINAK OILFIELD DEVELOPMENT SURFACE WORK PACKAGES

DATE	SCALE	DRAWING BY	CHECKED BY	PROJECT ENG.

HAVAYAR

DRAWING TITLE: HOOK UP DRAWING

NO CONSTRUCTION PERMITTED UNLESS DRAWING APPROVED

APPROVED FOR CONSTRUCTION | BY: | DATE:

SCALE	SIZE	DRAWING NO.	SHEET NO.	REV.
N.T.S.C.	A3	BK-GCS-HY-120-IN-DW-0007	19 OF 19	V03

BUDGET REF.	LOCATION	SIZE	CLASS	SERIAL NO.	SHEET	REVISION

Software Autocad File No BK-GCS-HY-120-IN-DW-0007-V03.dwg