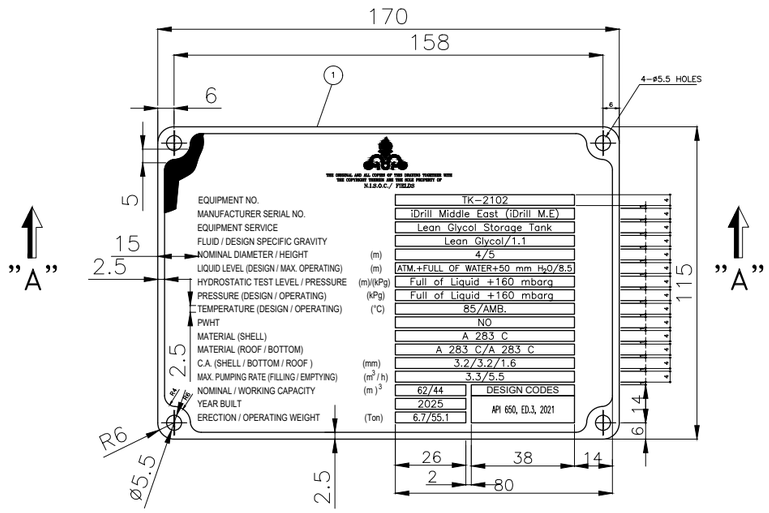

EQUIPMENT NO.		TK-2102
MANUFACTURER SERIAL NO.		iDrill Middle East (iDrill M.E)
EQUIPMENT SERVICE		Lean Glycol Storage Tank
FLUID / DESIGN SPECIFIC GRAVITY		Lean Glycol/1.1
NOMINAL DIAMETER / HEIGHT	(m)	4/5
LIQUID LEVEL (DESIGN / MAX. OPERATING)	(m)	ATM.+FULL OF WATER+50 mm H_2O/8.5
HYDROSTATIC TEST LEVEL / PRESSURE	(m)/(kPg)	Full of Liquid +160 mbarg
PRESSURE (DESIGN / OPERATING)	(kPg)	Full of Liquid +160 mbarg
TEMPERATURE (DESIGN / OPERATING)	(°C)	85/AMB.
PWHT		NO
MATERIAL (SHELL)		A 283 C
MATERIAL (ROOF / BOTTOM)		A 283 C/A 283 C
C.A. (SHELL / BOTTOM / ROOF)	(mm)	3.2/3.2/1.6
MAX. PUMPING RATE (FILLING / EMPTYING)	(m^3 / h)	3.3/5.5
NOMINAL / WORKING CAPACITY	(m^3)	62/44
YEAR BUILT		2025
ERECTION / OPERATING WEIGHT	(Ton)	6.7/55.1

DESIGN CODES: API 650, ED.3, 2021

NAME PLATE

SCALE = 1:1

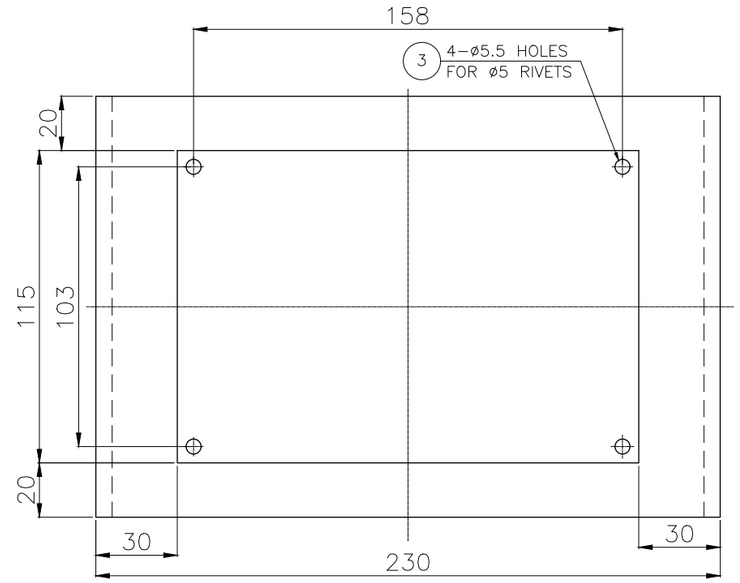

BRACKET

SCALE = 1:2

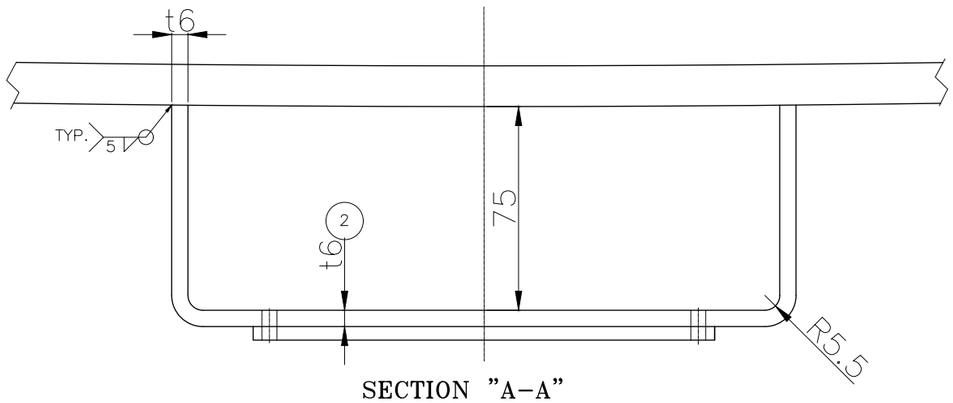

SECTION "A-A"

SCALE = 1:2

						TOTAL WEIGHT=(Kg)	3	
NAME PLATE	3	RIVET	ø5	4	COPPER	-		
	2	BRACKET	PL. 383.3x155, THK.=6	1	A 516 Gr.70	2.8	2.8	NOTE 15
	1	NAME PLATE	PL. 170x115, THK.=2	1	304 S.S.	0.3	0.3	NOTE14
PART	POS.	PART NAME	DESCRIPTION	QTY.	MATERIAL	UNIT WEIGHT (Kg)	TOTAL WEIGHT (Kg)	REMARK

PART LIST

NOTES

1. ALL DIMENSIONS ARE IN "mm" UNLESS OTHERWISE SPECIFIED.
2. ALL LETTERS , BLOCKS , AS WELL AS EDGES , SHALL HAVE RAISED POLISHED FACE – RELIEF 0.5mm APPROX.
3. BLACK BACKGROUND.

LEGEND

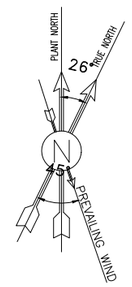

REV.	DATE	P.O.I.S	PREP.	CHK.	APP.	AUT.
V00	Feb. 2025	IFA	iDrill M.E.	M.FAKHARIAN	S.Paramarzpour	**.**

REV.	DESCRIPTION	BY	DATE	BY	DATE
***	**********	**.**	***.****	**.**	***.****
		CHECKED		REV. APPR.	

PROJECT NAME: BINAK OILFIELD DEVELOPMENT/SURFACE FACILITIES GAS & GAS-CONDENSATE PIPELINES

PROJECT NO.: 971020

EPC CONTRACTOR: HIRGAN ENERGY – DESIGN & INSPECTION COMPANIES

EPD/EPC CONTRACTOR (GC): PETROIRAN DEVELOPMENT COMPANY (PEDCO)

THE ORIGINAL AND ALL COPIES OF THIS DRAWING TOGETHER WITH THE COPYRIGHT THEREIN ARE THE SOLE PROPERTY OF N.I.S.O.C./ FIELDS

BINAK OILFIELD DEVELOPMENT
SURFACE FACILITIES
GAS CPMPRESSOR STATION

DATE	SCALE	DRAWING BY	CHECKED BY	PROJECT ENG.

iDrill MIDDLE EAST

MANUFACTURE:iDrill Middle East (iDrill M.E)

DRAWING TITLE: NAME PLATE DETAIL DRAWING FOR LEAN GLYCOL STORAGE TANK (TK-2102)

SCALE	SIZE	DRAWING NO.	SHEET NO.	REV.
1:5	A3	BK-GCS-IDR-120-ME-DW-0006	1 OF 1	V00

NO CONSTRUCTION PERMITTED UNLESS DRAWING APPROVED

APPROVED FOR CONSTRUCTION BY: DATE:

BUDGET REF.	LOCATION	SIZE	CLASS	SERIAL NO.	SHEET	REVISION