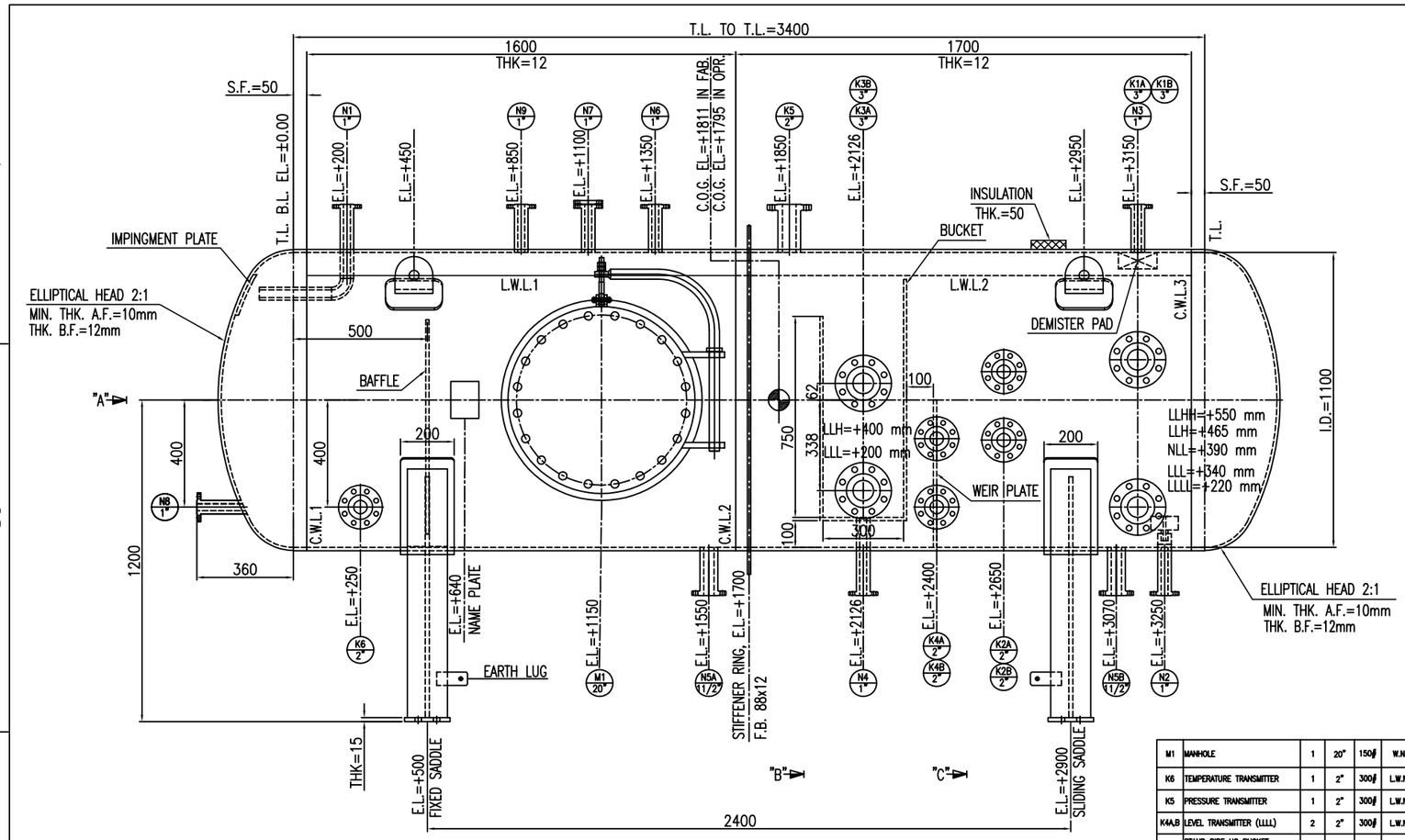

ELEVATION VIEW

SCALE 1:20

GENERAL NOTES

1. ALL DIMENSIONS ARE IN MM UNLESS OTHERWISE NOTED.
2. ALL ELEVATIONS ARE SPECIFIED FROM EQUIPMENT T.L. ±0.00
3. ALL THICKNESS SHOWN IN THE DRAWING ARE INTENDED AS MINIMUM AF
4. UNLESS OTHERWISE NOTED OUTSIDE PROJECTIONS OF NOZZLES ARE MEASURED FROM VESSEL HORIZONTAL C.L. TO THE FLANGES CONTACT FACE. FACE OF RADIAL FLANGES ON SHELL SHALL BE PARALLEL TO C.L.
5. FLANGES FACING TO BE IN ACCORDANCE WITH ASME B.16.5 FOR 24" OR LESS AND ASME B.16.47 SERIES A FOR LARGER.
6. FLANGES FACE FINISHING ARE SERRATED WITH 125 TO 250 MICRO INCH ROUGHNESS AS PER ASME B16.5 FOR 24" AND LESS. ALSO ASME B16.47 SERIES "A" FOR MORE THAN 24".
7. GASKETS SHALL BE SPIRAL WOUND WITH FLEXIBLE GRAPHITE FILLER 4.5MM, HOOP SS316, INNER & OUTER RING SS316.
8. BOLT HOLES FOR FLANGES SHALL BE STRADDLED TO NORTH–SOUTH AND/OR EQUIPMENT C.L.
9. ALL SHARP CORNERS WILL BE ROUNDED OFF.
10. ALL REMOVABLE INTERNALS PASS THROUGH THE MANHOLE 24".
11. 1/1.4 FACTOR FOR EARTHQUAKE LOADS AND 0.6 FACTOR FOR WIND LOADS HAS BEEN APPLIED FOR LOAD COMBINATION AS PER ASCE–7 2010.
12. FOR MORE SAFETY 10% CONTINGENCY FACTOR IS CONSIDERED ON BASE LOADS CALCULATIONS . SO , OVER LOADS MAY CHANGE THE LOADS & MOMENTS.
13. SETTING BOLTS HAVE 300 MPa TENSILE ALLOWABLE STRESS AND 180 MPa SHEAR ALLOWABLE STRESS AS MINIMUM.
14. ALL REINFORCED PAD HAVE 1/4" NPT TELLTAIL HOLE WHICH WILL BE PLUGGED WITH GREASE AFTER THE HYDRO TEST.
15. ALL REINFORCED PAD WILL BE AIR LEAK TESTED AT 1 BARG BY USING SOAP SOLUTION.
16. PAINTING WILL BE PERFORMED BASED ON "SURFACE PREPARATION AND INTERNAL/EXTERNAL PAINTING PROCEDURE DOC. NO. BK–GCS–MF–120–QC–PR–0004"
17. PWHT WILL BE PERFORMED BASED ON "PWHT PROCEDURE DOC NO. BK–CGS–MF–120–QC––PR–0006".
18. ALL PRESSURE PARTS BUTT WELDED JOINTS ARE FULLY RADIOGRAPHED.
19. ALL WELDS ARE CONTINUOUS UNLESS OTHERWISE NOTED.
20. WHERE IN ISOLATED CASES REINFORCING PADS COVER VESSEL WELD SEAMS THESE WILL BE GROUND FLUSH AND FULLY RADIOGRAPHED FOR A DISTANCE OF 100MM MEASURED EACH SIDE OF THE COVERED WELD AREA PRIOR TO THE ATTACHMENT OF THE PAD.
21. ALL INTERNAL WELDS WILL BE SMOOTH GRINDED.
22. VESSEL HAS BEEN DESIGNED FOR FIELD HYDROTEST IN CORRODED CONDITION.
23. ALL WET PART MATERIALS MEET "SPECIFICATION FOR MATERIAL REQUIREMENTS IN SOUR SERVICE DOC NO. "BK–GNRAL–PEDCO–000–PI–SP–0008"
24. ALL PRESSURE PARTS ARE NORMALIZED AND COMPLY WITH NACE MR0175/ISO 15156.
25. THE EQUIPMENT IS LOCATED ON SKID AND ELEVATION OF T.O.G. WILL BE FINALIZED LATER.
26. WILL BE FINALIZED BY INTERNAL MANUFACTURER LATER.

KEY PLAN

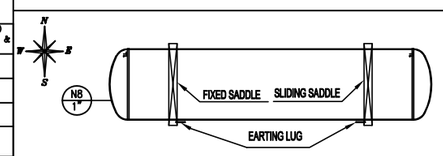

NOZZLE TABLE

MARK	SERVICE	QTY.	SIZE	RATING	TYPE	FACING	SCH/ THK.	DIA. REINFORCE PAD	THK. REINFORCE PAD	PROJECTION (NOTE 8)	REMARK
M1	MANHOLE	1	20"	150#	W.N.	R.F.	–/12	750	12	860	WITH BLIND DAVIT, BOLTS & NUTS
K6	TEMPERATURE TRANSMITTER	1	2"	300#	L.W.N.	R.F.	–/16.6	–	–	SEE DWG	
K5	PRESSURE TRANSMITTER	1	2"	300#	L.W.N.	R.F.	–/16.6	–	–	150	
K4A,B	LEVEL TRANSMITTER (LLLL)	2	2"	300#	L.W.N.	R.F.	–/16.6	–	–	SEE DWG	
K3A,B	STAND PIPE HC BUCKET (LG, LIC)	2	3"	300#	W.N.	R.F.	160/–	–	–	SEE DWG	
K2A,B	LEVEL TRANSMITTER (LLHH)	2	2"	300#	L.W.N.	R.F.	–/16.6	–	–	SEE DWG	
K1A,B	STAND PIPE (LG, LIC)	2	3"	300#	W.N.	R.F.	160/–	–	–	SEE DWG	
N9	INLET FROM TEG DRAIN DRUM	1	1"	150#	L.W.N.	R.F.	–/12.7	–	–	730	
N8	UTILITY CONNECTION	1	1"	150#	L.W.N.	R.F.	–/12.7	–	–	SEE DWG	
N7	VENT	1	1"	150#	L.W.N.	R.F.	–/12.7	–	–	730	WITH BLIND, BOLT&NUT
N6	PSV	1	1"	150#	L.W.N.	R.F.	–/12.7	–	–	730	–
N5A,B	DRAIN	2	1 1/2"	150#	L.W.N.	R.F.	–/14.45	–	–	730	–
N4	HYDROCARBON OUTLET	1	1"	150#	L.W.N.	R.F.	–/12.7	–		730	
N3	GAS OUTLET/BLANKETING	1	1"	150#	L.W.N.	R.F.	–/12.7	–	–	730	WITH DEMISTER
N2	TEG OUTLET	1	1"	150#	L.W.N.	R.F.	–/12.7	–	–	730	WITH VORTEX BREAKER
N1	TEG INLET	1	1"	150#	L.W.N.	R.F.	–/12.7	–	–	730	WITH INLET DIVERTER PIPE AND IMPINGMENT PLATE

NOZZLE LOAD

NOZZLE	SIZE	RATING	FORCE (KN) FL	FA	FC	MOMENT (KN–m) MC	MT	ML
N2	1"	150#	–	–	–	–	–	–
N1	1"	150#	–	–	–	–	–	–

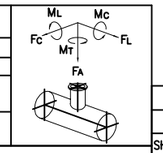

DESIGN DATA

DESIGN CODE : ASME VIII– DIV I 2019

GLYCOL FLASH DRUM (V–120)		WIND/SEISMIC CODE	ASCE7–10
PROCESS FLUID	TEG/HC GAS	SEISMIC DATA	Fa=1.111, Fv=1.575, Ss=1.377g,S1=0.367g,Site:C,I=1.25, R=3,z/h=0,Sds=1.02g,Sd1=0.385g
STAMP	N/A		
LIQUID DENSITY	WINTER: 1020 Kg/m3		
	SUMMER: 1017.6 Kg/m3	WIND IMPORTANCE FACTOR	1
DESIGN PRESSURE(INT./EXT.)	8/FV @ 100°C barg	WIND EXPOSURE	C
OPERATING PRESSURE	4.5 barg	WIND SPEED @ 10m A.G.	120 Km/hr
TEST PRESSURE	10.4 barg	VOLUME	3.6 m³
M.A.W.P.	8.58 barg	INSULATION/TYPE/DENSITY	50mm/HOT/125 Kg/m³
DESIGN TEMPERATURE	+5 /120 °C	INSULATION SUPPORT	YES
OPERATING TEMPERATURE	WINTER: 73.63 °C	VALVE DAVIT/TOP DAVIT	–/–
	SUMMER: 74.53 °C	INTERNAL LINING/DENSITY	NO
M.D.M.T. @ D.P.	+5 °C	FIREPROOFING(BOTH SIDE)/DENSITY	NO
HYDROTEST TYPE	UG–99(b) (36) HOR.	FIREPROOFING SUPPORT	NO
TEST POSITION (SITE)	HORIZONTAL	EXTERNAL PAINTING	YES (NOTE 16)
CORROSION ALLOWANCE	6 mm	EARTHING/PIPE SUPPORT CLIP	YES/–
RADIOGRAPHY (SHELL/HEAD)	FULL/FULL	SPECIAL SERVICE	(NOTE 24)
JOINT EFFICIENCY (SHELL/HEAD)	1/1	LADDER & PLATFORM	NO
LETHAL	YES	LIFTING DEVICE	YES
P.W.H.T.	YES	S.R. OF HEADS AFTER FORMING(BOTTOM/TOP)	NO/NO
IMPACT TEST	NO		

MATERIAL TABLE

DESCRIPTION	DESIGNATION	DESCRIPTION	DESIGNATION
SHELL	A–516 70N	REINFORCING PAD	SA–516 70N
HEAD	SA–516 70N	LIFTING LUG	SA–283 C
NOZZLE NECK (PIPE/PLATE)	SA–106 Gr.B/SA–516 70N	INSUL./FIREPROOFING SUPPORT	SA–516 70N
NOZZLE FLANGE/FORGING	A–105N	STIFFENING RING	SA–516 70N
WELDING FITTING	SA–234 WPB	EXTERNAL WELDED ATTACHMENTS	SA–516 70N
WEAR PLATE	SA–516 70N	INTERNAL WELDED/REMOVABLE	SA–516 70N/S.S. 316L
SADDLE	SA–283 C	NAME PLATE	SS 304
BOLTS/NUTS MATERIAL		**GASKET MATERIAL**	
SETTING BOLTS (BY OTHERS)	SA–325M (NOTE 13)	GASKET	(NOTE 7)
EXTERNAL(BOLTS/NUTS)	SA–193 B7/SA–194 2H		
INTERNAL(BOLTS/NUTS)	SA–193 B7/SA–194 2H		

WEIGHTS (kg)

FABRICATED	2785	SHOP HYDROTEST	6363
OPERATING	4712	FIELD HYDROTEST	5792
SHUTDOWN (EMPTY)	2888	INTERNALS	(NOTE 26)
ERECTED	2785	LADDERS & PLATFORMS	–

LOADING DATA ON EACH SADDLE (NOTE 11 & 12)

WIND SHEAR (N)	WIND MOMENT (N.m)	SEISMIC SHEAR (N)	SEISMIC MOMENT (N.m)
660	792	5713	6856

- ☐ NO COMMENT: Documents/Drawings were checked by PIDEC and further steps can be followed. Upon Putting No Comment on vendor documents by PIDEC, VDMS will lock it and there is not possible to upload any new revision,in this case vendors have to send their request through email to VDC for activating it.
- ☐ COMMENT AS MARKED, Manufacturing May Proceed: Means documents/drawings were checked by PIDEC and comments must be considered by vendor. Fabrication can proceed accordingly.
- ☐ MAJOR COMMENT AS MARKED,Manufacturing shall be on hold for the next revision: Means documents/ drawings were checked by PIDEC and marked comments must be considered by vendor.vendor shall revise documents/drawings as per comments and the new revision documents/drawings must be reissued prior to fabrication.
- ☐ REJECTED, new document with the same revision No. shall be issued : Means documents/drawings were checked and it is not comply with purchase requisition requirements.
- ☐ FOR INFORMATION.

Name:
Signature:
Date:
Req. No.:
Seq. No.:

PIDEC review & comments does not absolve the vendor of the responsibility for the correct design, manufacturing and operation of the equipment.

DE	EXT	
Eng. Phase	Purpose of Distribution (POD)	Purpose of Issue (POI)

REV.	DATE	P.O.I.S	PREP.	CHK.	APP.	AUT.
V00	DEC.2024	ISSUED FOR APPROVAL	MFS	M.FAKHARIAN	S.FARAMARZPOUR	** **

REV.	DESCRIPTION	BY	DATE	BY	DATE
		CHECKED		REV. APPR.	

PROJECT NAME: BINAK OILFIELD DEVELOPMENT/SURFACE FACILITIES GAS COMPRESSOR STATION

PROJECT NO.: 971020

EPC CONTRACTOR: HIRGAN ENERGY – DESIGN & INSPECTION COMPANIES

EPD/EPC CONTRACTOR (GC): PETROIRAN DEVELOPMENT COMPANY — PEDCO

THE ORIGINAL AND ALL COPIES OF THIS DRAWING TOGETHER WITH THE COPYRIGHT THEREIN ARE THE SOLE PROPERTY OF N.I.S.O.C./ FIELDS

BINAK OILFIELD DEVELOPMENT
SURFACE FACILITIES
GAS COMPRESSOR STATION

DATE	SCALE	DRAWING BY	CHECKED BY	PROJECT ENG.

NO CONSTRUCTION PERMITTED UNLESS DRAWING APPROVED

APPROVED FOR CONSTRUCTION BY: DATE:

DRAWING TITLE: GENERAL ARRANGEMENT FOR GLYCOL FLASH DRUM (V–120)

SCALE	SIZE	DRAWING NO.	SHEET NO.	REV.
NTS	A3	BK–GCS–MF–120–ME–DW–0008	1 OF 2	V00

BUDGET REF.	LOCATION	SIZE	CLASS	SERIAL NO.	SHEET	REVISION

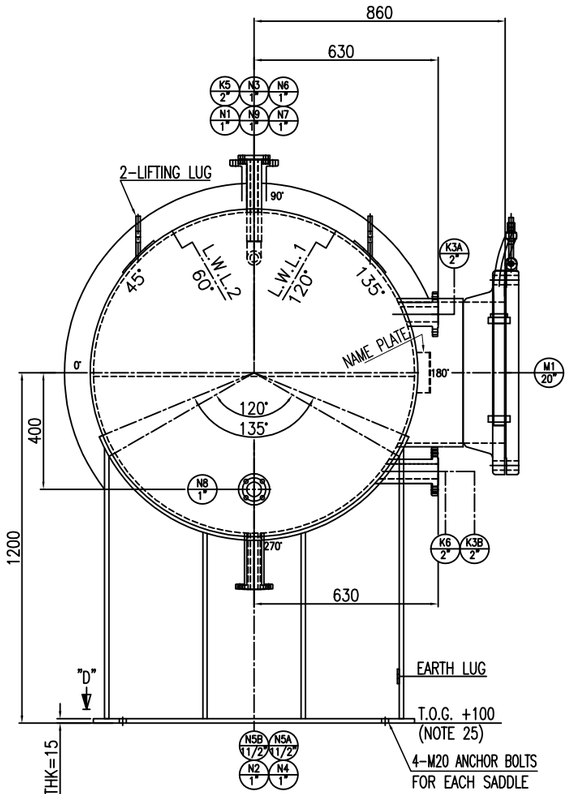

VIEW "A"
SCALE 1:20

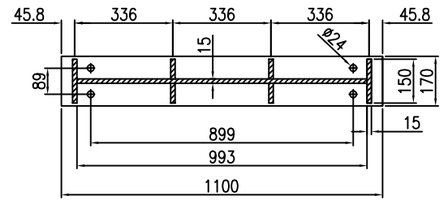

VIEW "D"
FIXED SADDLE
SCALE 1:20

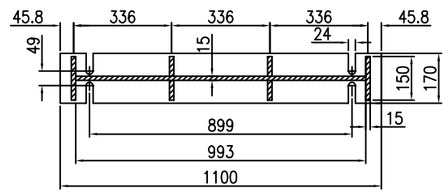

VIEW "D"
SLIDING SADDLE
SCALE 1:20

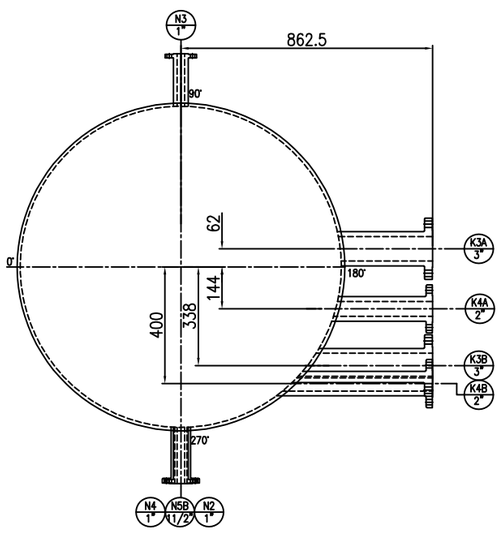

VIEW "B"
SCALE 1:20

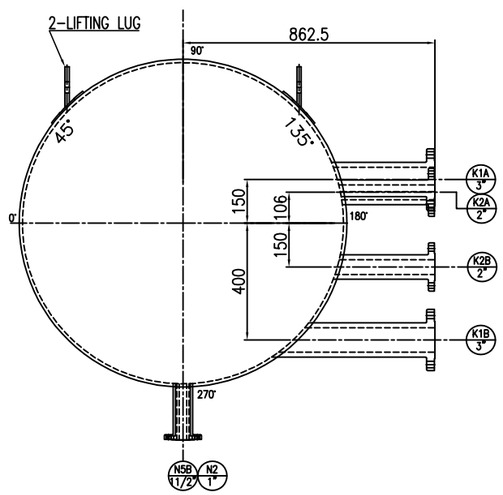

VIEW "C"
SCALE 1:20

GENERAL NOTES

ABBREVIATIONS & LEGEND

T.L.	TANGENT LINE	N	NORMALIZED
B.L.	BASE LINE	P.W.H.T.	POST WELD HEAT TREATMENT
C.O.G.	CENTER OF GRAVITY	R.F.	RAISED FACE
EL.	ELEVATION	S.R.	STRESS RELIEVE
F.B.	FLAT BAR	S.F.	STRAIGHT FLANGE
L.L.H.	LIQUID LEVEL HIGH	T.L.	TANGENT LINE
L.L.H.H.	LIQUID LEVEL HIGH HIGH	T.O.G.	TOP OF GROUTING
L.L.L.	LIQUID LEVEL LOW	W.N.	WELDING NECK
L.L.L.L.	LIQUID LEVEL LOW LOW	L.W.L.	LONGITUDINAL WELDING LINE
N.L.L.	NORMAL LIQUID LEVEL	C.W.L.	CIRCUMFERENTIAL WELDING LINE
M.A.W.P.	MAX. ALLOWABLE WORKING PRESSURE	L.W.N.	LONG WELDING NECK
M.D.M.T.	MIN. DESIGN METAL TEMP.	R.T.	RADIOGRAPHY TEST
D.P.	DESIGN PRESSURE	INT.	INTERNAL
J.E.	JOINT EFFICIENCY	EXT.	EXTERNAL
L.	LIQUID	H.P.P.	HIGHEST POINT OF PAVING
V.	VAPOR	THK.	THICKNESS
DWG	DRAWING	N.A.	NOT APPLICABLE

REFERENCE DRAWINGS	DRAWING NO.
PROCESS DATASHEET FOR GLYCOL FLASH DRUM (V-120)	BK-GCS-MF-120-PR-DS-0002
MECHANICAL CALCULATION BOOK FOR GLYCOL FLASH DRUM (V-120)	BK-GCS-MF-120-ME-CN-0003
DETAILS DRAWING FOR GLYCOL FLASH DRUM (V-120)	BK-GCS-MF-120-ME-DW-0009
NAME PLATE DRAWING FOR GLYCOL FLASH DRUM (V-120)	BK-GCS-MF-120-ME-DW-0010

REV.	DATE	P.O.I.S	PREP.	CHK.	APP.	AUT.
V00	DEC.2024	ISSUED FOR APPROVAL	MFS	M.FAKHARIAN	S.FARAMARZPOUR	**.**

REV.	DESCRIPTION	BY	DATE	BY	DATE
		CHECKED		REV. APPR.	

PROJECT NAME: BINAK OILFIELD DEVELOPMENT/SURFACE FACILITIES GAS COMPRESSOR STATION

PROJECT NO.: 971020

EPC CONTRACTOR: HIRGAN ENERGY – DESIGN & INSPECTION COMPANIES

EPD/EPC CONTRACTOR (GC): PETROIRAN DEVELOPMENT COMPANY — PEDCO

THE ORIGINAL AND ALL COPIES OF THIS DRAWING TOGETHER WITH THE COPYRIGHT THEREIN ARE THE SOLE PROPERTY OF N.I.S.O.C./ FIELDS

BINAK OILFIELD DEVELOPMENT
SURFACE FACILITIES
GAS COMPRESSOR STATION

DATE	SCALE	DRAWING BY	CHECKED BY	PROJECT ENG.

NO CONSTRUCTION PERMITTED UNLESS DRAWING APPROVED

APPROVED FOR CONSTRUCTION | BY: | DATE:

DRAWING TITLE: GENERAL ARRANGEMENT FOR GLYCOL FLASH DRUM (V-120)

SCALE	SIZE	DRAWING NO.	SHEET NO.	REV.
NTS	A3	BK-GCS-MF-120-ME-DW-0008	2 OF 2	V00

BUDGET REF.	LOCATION	SIZE	CLASS	SERIAL NO.	SHEET	REVISION