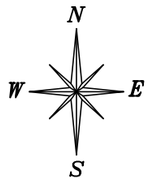

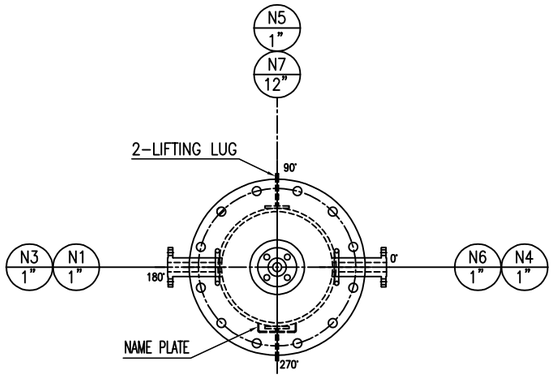

VIEW "A"
SCALE 1:16

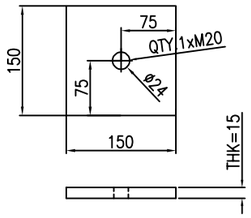

BASE PLATE DETAIL
SCALE 1:8

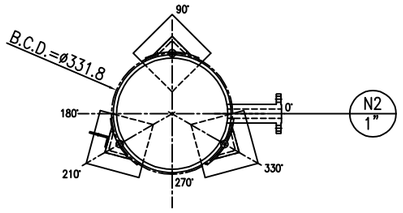

SECTION "B-B"
SCALE 1:16

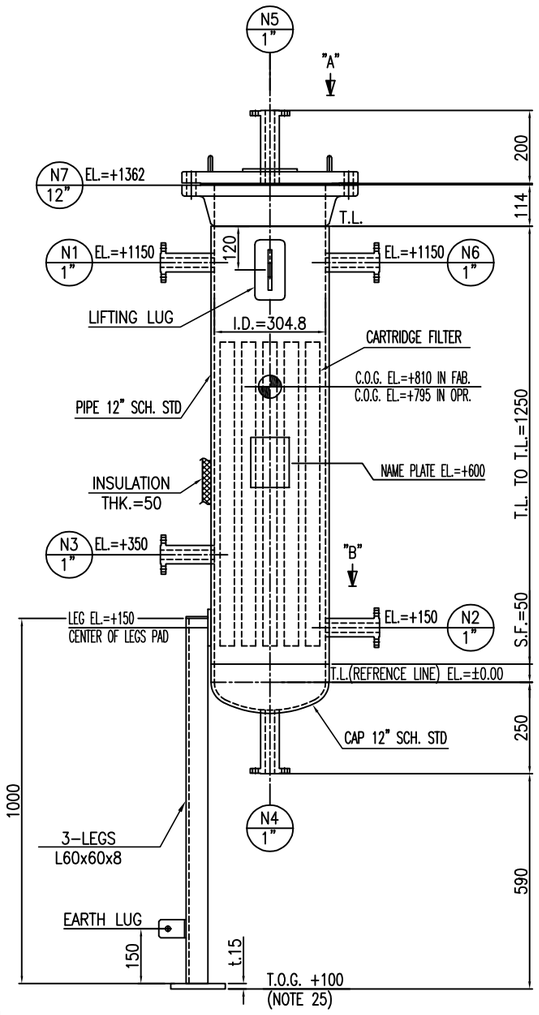

ELEVATION VIEW
SCALE 1:16

GENERAL NOTES

1. ALL DIMENSIONS ARE IN MM UNLESS OTHERWISE NOTED.
2. ALL ELEVATIONS ARE SPECIFIED FROM EQUIPMENT T.L. ±0.00
3. ALL THICKNESS SHOWN IN THE DRAWING ARE INTENDED AS MINIMUM AF
4. UNLESS OTHERWISE NOTED OUTSIDE PROJECTIONS OF NOZZLES ARE MEASURED FROM VESSEL VERTICAL C.L. TO THE FLANGES CONTACT FACE. FACE OF RADIAL FLANGES ON SHELL SHALL BE PERPENDICULAR TO C.L.
5. FLANGES FACING TO BE IN ACCORDANCE WITH ASME B.16.5 FOR 24" OR LESS AND ASME B.16.47 SERIES A FOR LARGER.
6. FLANGES FACE FINISHING ARE SERRATED WITH 125 TO 250 MICRO INCH ROUGHNESS AS PER ASME B16.5 FOR 24" AND LESS. ALSO ASME B16.47 SERIES "A" FOR MORE THAN 24".
7. GASKETS SHALL BE SPIRAL WOUND WITH FLEXIBLE GRAPHITE FILLER 4.5MM, HOOP SS316, INNER & OUTER RING SS316.
8. BOLT HOLES FOR FLANGES SHALL BE STRADDLED TO NORTH-SOUTH AND/OR EQUIPMENT C.L.
9. ALL SHARP CORNERS WILL BE ROUNDED OFF.
10. ALL REMOVABLE INTERNALS PASS THROUGH THE HANDHOLE 12".
11. 1/1.4 FACTOR FOR EARTHQUAKE LOADS AND 0.6 FACTOR FOR WIND LOADS HAS BEEN APPLIED FOR LOAD COMBINATION AS PER ASCE-7 2010 ON ONE LEG.
12. FOR MORE SAFETY 10% CONTINGENCY FACTOR IS CONSIDERED ON BASE LOADS CALCULATIONS . SO , OVER LOADS MAY CHANGE THE LOADS & MOMENTS.
13. SETTING BOLTS HAVE 300 MPa TENSILE ALLOWABLE STRESS AND 180 MPa SHEAR ALLOWABLE STRESS AS MINIMUM.
14. ALL REINFORCED PAD HAVE 1/4" NPT TELLTAIL HOLE WHICH WILL BE PLUGGED WITH GREASE AFTER THE HYDRO TEST.
15. ALL REINFORCED PAD WILL BE AIR LEAK TESTED AT 1 BARG BY USING SOAP SOLUTION.
16. PAINTING WILL BE PERFORMED BASED ON "SURFACE PREPARATION AND INTERNAL/EXTERNAL PAINTING PROCEDURE DOC. NO. BK-GCS-MF-120-QC-PR-0004"
17. PWHT WILL BE PERFORMED BASED ON "PWHT PROCEDURE DOC NO. BK-CGS-MF-120-QC--PR-0006".
18. ALL PRESSURE PARTS BUTT WELDED JOINTS ARE FULLY RADIOGRAPHED.
19. ALL WELDS ARE CONTINUOUS UNLESS OTHERWISE NOTED.
20. WHERE IN ISOLATED CASES REINFORCING PADS COVER VESSEL WELD SEAMS THESE WILL BE GROUND FLUSH AND FULLY RADIOGRAPHED FOR A DISTANCE OF 100MM MEASURED EACH SIDE OF THE COVERED WELD AREA PRIOR TO THE ATTACHMENT OF THE PAD.
21. ALL INTERNAL WELDS WILL BE SMOOTH GRINDED.
22. VESSEL HAS BEEN DESIGNED FOR FIELD HYDROTEST IN CORRODED CONDITION.
23. ALL WET PART MATERIALS MEET "SPECIFICATION FOR MATERIAL REQUIREMENTS IN SOUR SERVICE DOC NO. "BK-GNRAL-PEDCO-000-PI-SP-0008"
24. ALL PRESSURE PARTS ARE NORMALIZED AND COMPLY WITH NACE MR0175/ISO 15156.
25. THE EQUIPMENT IS LOCATED ON SKID AND ELEVATION OF T.O.G. WILL BE FINALIZED LATER.
26. WILL BE FINALIZED BY INTERNAL MANUFACTURER LATER.

ABBREVIATIONS & LEGEND

T.L.	TANGENT LINE	N	NORMALIZED
B.L.	BASE LINE	P.W.H.T.	POST WELD HEAT TREATMENT
C.O.G.	CENTER OF GRAVITY	R.F.	RAISED FACE
EL.	ELEVATION	S.R.	STRESS RELIEVE
F.B.	FLAT BAR	S.F.	STRAIGHT FLANGE
L.L.H.	LIQUID LEVEL HIGH	T.L.	TANGENT LINE
L.L.H.H.	LIQUID LEVEL HIGH HIGH	T.O.G.	TOP OF GROUTING
L.L.L.	LIQUID LEVEL LOW	W.N.	WELDING NECK
L.L.L.L.	LIQUID LEVEL LOW LOW	L.W.L.	LONGITUDINAL WELDING LINE
N.L.L.	NORMAL LIQUID LEVEL	C.W.L.	CIRCUMFERENTIAL WELDING LINE
M.A.W.P.	MAX. ALLOWABLE WORKING PRESSURE	L.W.N.	LONG WELDING NECK
M.D.M.T.	MIN. DESIGN METAL TEMP.	R.T.	RADIOGRAPHY TEST
D.P.	DESIGN PRESSURE	INT.	INTERNAL
J.E.	JOINT EFFICIENCY	EXT.	EXTERNAL
L.	LIQUID	H.P.P.	HIGHEST POINT OF PAVING
V.	VAPOR	THK.	THICKNESS
DWG	DRAWING	N.A.	NOT APPLICABLE

NOZZLE TABLE

MARK	SERVICE	QTY.	SIZE	RATING	TYPE	FACING	SCH/THK.	DIA.	THK. (REINFORCE PAD)	PROJECTION (NOTE 8)	REMARK
N7	HANDHOLE	1	12"	150#	W.N.	R.F.	STD/-	-	-	SEE DWG	WITH BLIND, BOLT & NUT
N6	PSV	1	1"	150#	L.W.N.	R.F.	-/12.7	-	-	300	-
N5	VENT	1	1	150#	L.W.N.	R.F.	-/12.7	150	8	SEE DWG	-
N4	DRAIN	1	1"	150#	L.W.N.	R.F.	-/12.7	-	-	SEE DWG	-
N3	DRAIN	1	1"	150#	L.W.N.	R.F.	-/12.7	-	-	300	-
N2	OUTLET	1	1"	150#	L.W.N.	R.F.	-/12.7	-	-	300	-
N1	INLET	1	1"	150#	L.W.N.	R.F.	-/12.7	-	-	300	-

NOZZLE LOAD

NOZZLE	SIZE	RATING	FORCE (KN) FL	FA	FC	MOMENT (KN-m) MC	MT	ML
N2	1"	150#	-	-	-	-	-	-
N1	1"	150#	-	-	-	-	-	-

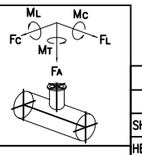

DESIGN DATA

DESIGN CODE : ASME VIII- DIV I 2019

GLYCOL PARTICLE FILTER (F-100 A/B)		WIND/SEISMIC CODE	ASCE7-10
PROCESS FLUID	RICH TEG	EARTHQUAKE CONDITIONS	Fa=1.111, Fv=1.575, Ss=1.377g,S1=0.367g,Site:C,I=1.25, R=2.5,z/h=0,Sds=1.02g,Sd1=0.385g
STAMP	N/A		
LIQUID DENSITY	WINTER: 1020 Kg/m3		
	SUMMER: 1017.6 Kg/m3	WIND IMPORTANCE FACTOR	1
DESIGN PRESSURE(INT./EXT.)	8/F.V.@100°C barg	WIND EXPOSURE	C
OPERATING PRESSURE	4.5 barg	WIND SPEED @ 10m A.G.	120 Km/hr
DESIGN TEMPERATURE	+5 /100 °C	VOLUME	0.11 m^3
OPERATING TEMPERATURE	WINTER: 74.53 °C	INSULATION/TYPE/DENSITY	50mm/HOT/125 Kg/m^3
	SUMMER: 73.63 °C	LADDER & PLATFORM	NO
TEST PRESSURE	10.5 barg	VALVE DAVIT/TOP DAVIT	-/-
HYDROTEST TYPE	UG-99(b) (36) VERTICAL	INTERNAL LINING/DENSITY	NO
TEST POSITION(SITE)	VERTICAL	FIREPROOFING(BOTH SIDE)/DENSITY	NO
RADIOGRAPHY (SHELL/HEAD)	FULL/FULL	FIREPROOFING SUPPORT	NO
JOINT EFFICIENCY (SHELL/HEAD)	1/1	EXTERNAL PAINTING	YES/(NOTE 16)
LETHAL	YES	EARTHING/PIPE SUPPORT CLIP	YES/-
P.W.H.T.	YES	S.R. OF HEADS AFTER FORMING(BOTTOM/TOP)	NO/NO
M.D.M.T. @ D.P.	+5 °C	INSULATION SUPPORT	YES
M.A.W.P.	17 barg	IMPACT TEST	NO
CORROSION ALLOWANCE	6 mm	LIFTING DEVICE	YES

MATERIAL TABLE

DESCRIPTION	DESIGNATION	DESCRIPTION	DESIGNATION
SHELL	SA 106 Gr.BN	REINFORCING PAD	SA-516 70N
HEAD	SA-234 WPB N	LIFTING LUG	SA-283 C
NOZZLE NECK (PIPE/PLATE)	SA-106 Gr.B/SA-516 70N	INSUL./FIREPROOFING SUPPORT	SA-516 70N
NOZZLE FLANGE/FORGING	A-105 N	STIFFENING RING	-
WELDING FITTING	SA-234 WPB N	EXTERNAL WELDED ATTACHMENTS	SA-516 70N
SKIRT(TOP/BOTTOM)	-	INTERNAL WELDED/REMOVABLE	SA-516 70N/SS 316L
LEG	SA-36	NAME PLATE	SS 304
BOLTS/NUTS MATERIAL		GASKET MATERIAL	
SETTING BOLTS	SA-325M (NOTE 13)	GASKET	(NOTE 7)
EXTERNAL(BOLTS/NUTS)	SA-193 B7/SA-194 2H		
INTERNAL(BOLTS/NUTS)	-		

WEIGHTS (kg)

FABRICATED	259	SHOP HYDROTEST	363
OPERATING	417	FIELD HYDROTEST	310
SHUTDOWN (EMPTY)	321	INTERNALS	(NOTE 26)
ERRECTED	259	LADDERS & PLATFORMS	-

LOADING DATA (NOTE 11 & 12)

WIND		SEISMIC	
SHEAR (N)	MOMENT (N.m)	SHEAR (N)	MOMENT (N.m)
119	119	734	734

REFERENCE DRAWINGS	DRAWING NO.
PROCESS DATASHEET FOR GLYCOL PARTICLE FILTER (F-100 A/B)	BK-GCS-MF-120-PR-DS-0003
MECHANICAL CALCULATION BOOK FOR GLYCOL PARTICLE FILTER (F-100 A/B)	BK-GCS-MF-120-ME-CN-0004
DETAILS DRAWING FOR GLYCOL PARTICLE FILTER (F-100 A/B)	BK-GCS-MF-120-ME-DW-0012
NAME PLATE DRAWING FOR GLYCOL PARTICLE FILTER (F-100 A/B)	BK-GCS-MF-120-ME-DW-0013

REV.	DATE	P.O.I.S	PREP.	CHK.	APP.	AUT.
V00	DEC.2024	ISSUED FOR APPROVAL	MFS	M.FAKHARIAN	S.FARAMARZPOUR	**.**

REV.	DESCRIPTION	BY	DATE	BY	DATE
		CHECKED		REV. APPR.	

PROJECT NAME: BINAK OILFIELD DEVELOPMENT/SURFACE FACILITIES GAS COMPRESSOR STATION

PROJECT NO.: 971020

EPC CONTRACTOR: HIRGAN ENERGY – DESIGN & INSPECTION COMPANIES

EPD/EPC CONTRACTOR (GC): PEDCO — PETROIRAN DEVELOPMENT COMPANY

THE ORIGINAL AND ALL COPIES OF THIS DRAWING TOGETHER WITH THE COPYRIGHT THEREIN ARE THE SOLE PROPERTY OF N.I.S.O.C./ FIELDS

BINAK OILFIELD DEVELOPMENT
SURFACE FACILITIES
GAS COMPRESSOR STATION

DATE	SCALE	DRAWING BY	CHECKED BY	PROJECT ENG.

DRAWING TITLE: GENERAL ARRANGEMENT FOR GLYCOL PARTICLE FILTER (F-100 A/B)

SCALE	SIZE	DRAWING NO.	SHEET NO.	REV.
NTS	A3	BK-GCS-MF-120-ME-DW-0011	1 OF 1	V00

NO CONSTRUCTION PERMITTED UNLESS DRAWING APPROVED

APPROVED FOR CONSTRUCTION BY: DATE:

BUDGET REF.	LOCATION	SIZE	CLASS	SERIAL NO.	SHEET	REVISION