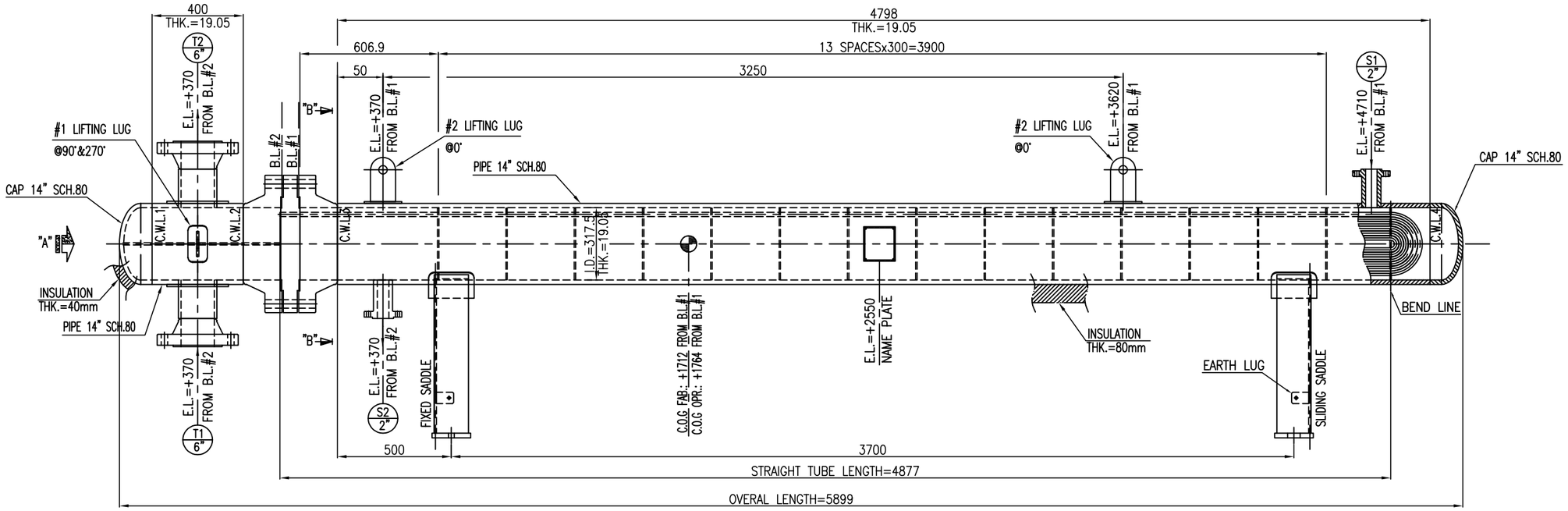

ELEVATION VIEW

SCALE 1:20

DESIGN DATA

DESIGN CODE	ASME VIII- DIV I 2019	
SERVICE	LEAN GLYCOL DRY GAS (E-300)	
TEMA TYPE	BEU	
ORIENTATION/QTY.	HORIZONTAL/1	
SHELL IN SERIES/PARALLEL	1/1	
SIZE (mm)	317.5x4877	
DESIGN DUTY (KW)	32.2	
SURFACE GROSS/EFF. (m2)	33.3/32.8	
	SHELL SIDE	TUBE SIDE
FLUID	LEAN TEG	DRY GAS
VOLUME (m3)	0.4	0.17
DENSITY (IN/OUT) (Kg/m3)	1022.8 L/1045.2 L	56.2 V/ 54.9 V
NUMBER OF PASS	1	2
OPERATING PRESSURE (barg)	55.1	53.6
DESIGN PRESSURE (barg)	62	59
TEST PRESSURE (barg)	80.6	76.7
MAWP (barg)	78.6	76
OPERATING TEMPERATURE (IN/OUT) (°C)	120.45/68	63.62/66.21
DESIGN TEMPERATURE (°C)	145	95
MDMT (°C)	+5	+5
MEAN METAL TEMPERATURE (°C)	83.8	67.1
CORROSION ALLOWANCE (mm)	3	3
RADIOGRAPHY (SHELL/HEAD)	FULL/FULL	FULL/FULL
JOINT EFFICIENCY (SHELL/HEAD)	1/1	1/1
PWHT	YES	YES
STRESS RELIEVING	NO	YES (TUBES)
INSULATION (DENSITY/TYPE/THK.) (mm)	125/HOT/80	125/HOT/40
FIREPROOFING (DENSITY/THK.) (mm)	-/-	-/-
EXTERNAL PAINTING	NOTE 17	NOTE 17
EARTHQUAKE CONDITIONS	ASCE 7-10 : Fa=1.111, Fv=1.575, Ss=1.377g,S1=0.367g,Site:C,I=1.25, R=3,z/h=0,Sds=1.02g,Sd1=0.385g	
WIND CONDITIONS	ASCE 7-10 : Wind Speed=120km/h, I.F.=1, Surface Roughness=C	

TUBE BUNDLE DATA

TUBE QTY.	55U	BAFFLE TYPE	SINGLE SEGMENTAL
TUBE O.D. mm	19.05	BAFFLE ORIENTATION	VERTICAL
TUBE THK. mm	2.11 (min)	BAFFLE CUT	28%
TUBE PITCH mm	23.813	BAFFLE/FULL SUPPORT QTY.	14 / 1
OUTER TUBE DIAMETER mm	299.5	TIE ROD QTY.	4
TUBE LAYOUT	30°	SEALING RING/ROD QTY.	-
TUBE LENGTH (STRANGHT) (mm)	4877	PASS PARTITION QTY.	1
TUBE TO TUBESHEET JOINT:	EXPANDED & FULL STRENGTH WELD (2GROOVES)		

MATERIAL TABLE

SHELL SIDE		TUBE SIDE	
DESCRIPTION	DESIGNATION	DESCRIPTION	DESIGNATION
BARREL	SA-106 Gr.B N	BARREL	SA-106 Gr.B N
COVER HEAD	SA-234 WPB N	COVER HEAD	SA-234 WPB N
GIRTH FLANGE	SA-105 N	GIRTH FLANGE	SA-105 N
NOZZLE NECK (PIPE/PLATE)	SA-106 Gr.B N/-	NOZZLE NECK (PIPE/PLATE)	SA-106 Gr.B N/-
NOZZLE FLANGE/FORGING	SA-105 N	NOZZLE FLANGE/FORGING	SA-105 N
WELDING FITTING	SA-234 WPB N	WELDING FITTING	SA-234 WPB N
GENERAL		TUBE BUNDLE	
SUPPORT	-	TUBESHEET	SA-266 Gr.2 N
NAME PLATE	S.S.304	TUBE	SA-179 N
PARTITION PLATE	SA-516 Gr.70 N	BAFFLE & SUPPORT	SA-516 Gr.70 N
EARTHING LUG	S.S.304	TIE ROD	C.S.
TEST RING	-	IMPINGEMENT PLATE	-
BOLTS/NUTS MATERIAL		GASKET MATERIAL	
SETTING BOLTS	SA-325M (NOTE 14)	SHELL & CHANNEL NOZZLE FLANGE	(NOTE 7)
EXTERNAL(BOLTS/NUTS)	SA-193 B7/SA-194 Gr 2H	SHELL & CHANNEL/TUBESHEET	(NOTE 7)
INTERNAL(BOLTS/NUTS)	-		

WEIGHTS (kg)

FABRICATED	2352	SHOP HYDROTEST	2762
OPERATING	2691	FIELD HYDROTEST	2703
SHUTDOWN (EMPTY)	2429	INTERNALS	-
TUBE BUNDLE	719	LADDERS & PLATFORMS	-

LOADING DATA ON EACH SADDLE (NOTE 12 & 13)

WIND		SEISMIC	
SHEAR (N)	MOMENT (N.m)	SHEAR (N)	MOMENT (N.m)
473	378	3663	2930

NOZZLE LOAD

NOZZLE	SIZE	RATING	FORCE (KN)			MOMENT (KN-m)		
			FL	FA	FC	MC	MT	ML
T1,T2	2"	150#	2.8	2.8	2.1	0.28	0.42	0.36
S1,2	6"	150#	8.4	8.4	6.3	2.52	3.78	3.28

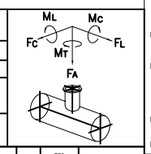

NOZZLE TABLE

MARK	SERVICE	QTY.	SIZE	RATING	TYPE	FACING	SCH/ THK.	DIA.	THK.	PROJECTION	REMARK
								REINFORCE PAD			
S2	LEAN TEG OUTLET	1	2"	600#	L.W.N	R.F.	-/16.6	-	-	330	
S1	LEAN TEG INLET	1	2"	600#	L.W.N	R.F.	-/16.6	-	-	330	
T2	RICH TEG OUTLET	1	6"	600#	W.N	R.F.	80/-	270	10	400	
T1	RICH TEG INLET	1	6"	600#	W.N	R.F.	80/-	270	10	400	

REFERENCE DRAWINGS

REFERENCE DRAWINGS	DRAWING NO.
THERMAL/MECHANICAL CALCULATION BOOK FOR LEAN GLYCOL GAS H.E. (E-300)	BK-GCS-MF-120-ME-CN-0008
DETAILS DRAWING FOR LEAN GLYCOL GAS H.E. (E-300)	BK-GCS-MF-120-ME-DW-0024
NAME PLATE DETAIL DRAWING FOR LEAN GLYCOL GAS H.E. (E-300)	BK-GCS-MF-120-ME-DW-0025
WELDING & NDT MAP FOR LEAN GLYCOL GAS H.E. (E-300)	BK-GCS-MF-120-ME-MP-0008

- ☐ NO COMMENT: Documents/Drawings were checked by PIDEC and further steps can be followed. Upon Putting No Comment on vendor documents by PIDEC, VDMS will lock it and there is not possible to upload any new revision,in this case vendors have to send their request through email to VDC for activating it.
- ☐ COMMENT AS MARKED, Manufacturing May Proceed: Means documents/drawings were checked by PIDEC and comments must be considered by vendor. Fabrication can proceed accordingly.
- ☐ MAJOR COMMENT AS MARKED,Manufacturing shall be on hold for the next revision: Means documents/ drawings were checked by PIDEC and marked comments must be considered by vendor.vendor shall revise documents/drawings as per comments and the new revision documents/drawings must be reissued prior to fabrication.
- ☐ REJECTED, new document with the same revision No. shall be issued : Means documents/drawings were checked and it is not comply with purchase requisition requirements.
- ☐ FOR INFORMATION.

Name:
Signature:
Date:

Req. No.:

Seq. No.:

PIDEC review & comments does not absolve the vendor of the responsibility for the correct design, manufacturing and operation of the equipment.

DE	EXT	
Eng. Phase	Purpose of Distribution (POD)	Purpose of Issue (POI)

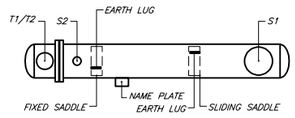

KEY PLAN
N.T.S

REV.	DESCRIPTION	BY	DATE	BY	DATE
		CHECKED		REV. APPR.	
V00	DEC.2024 ISSUED FOR APPROVAL	MFS	M.FAKHARIAN	S.FARAMARZPOUR	** **
REV.	DATE P.O.I.S	PREP.	CHK.	APP.	AUT.

PROJECT NAME: BINAK OILFIELD DEVELOPMENT/SURFACE FACILITIES GAS COMPRESSOR STATION

PROJECT NO.: 971020

EPC CONTRACTOR: HIRGAN ENERGY – DESIGN & INSPECTION COMPANIES

EPD/EPC CONTRACTOR (GC): PETROIRAN DEVELOPMENT COMPANY

BINAK OILFIELD DEVELOPMENT
SURFACE FACILITIES
GAS COMPRESSOR STATION

DATE	SCALE	DRAWING BY	CHECKED BY	PROJECT ENG.

DRAWING TITLE: GENERAL ARRANGEMENT FOR LEAN GLYCOL GAS H.E. (E-300)

SCALE	SIZE	DRAWING NO.	SHEET NO.	REV.
NTS	A3	BK-GCS-MF-120-ME-DW-0023	1 OF 2	V00

NO CONSTRUCTION PERMITTED UNLESS DRAWING APPROVED

APPROVED FOR CONSTRUCTION	BY:	DATE:

BUDGET REF.	LOCATION	SIZE	CLASS	SERIAL NO.	SHEET	REVISION

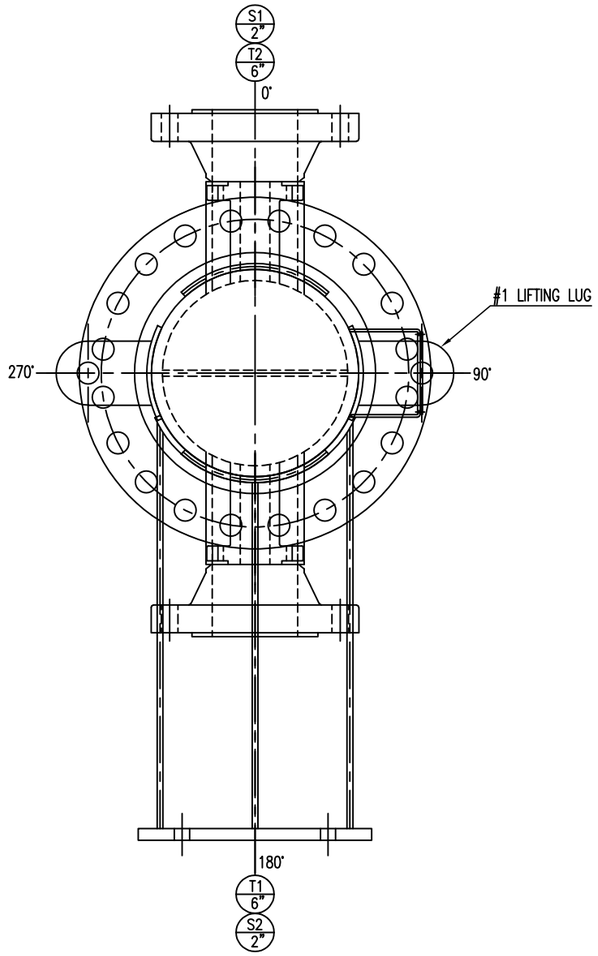

VIEW "A"

SCALE 1:10

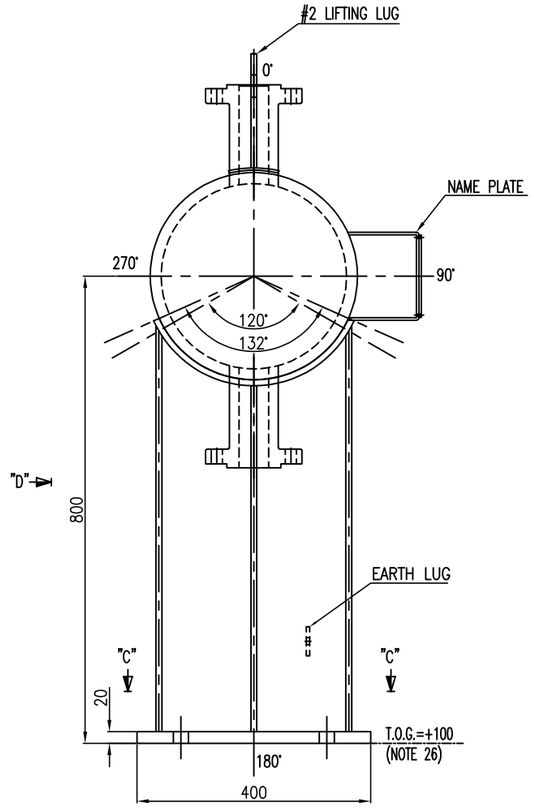

SECTION "B-B"

SCALE 1:10

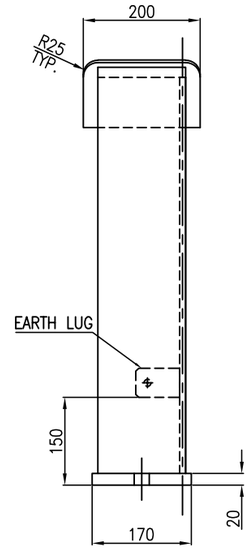

VIEW "D"

SCALE 1:10

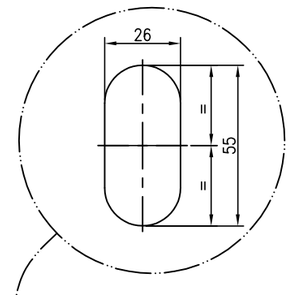

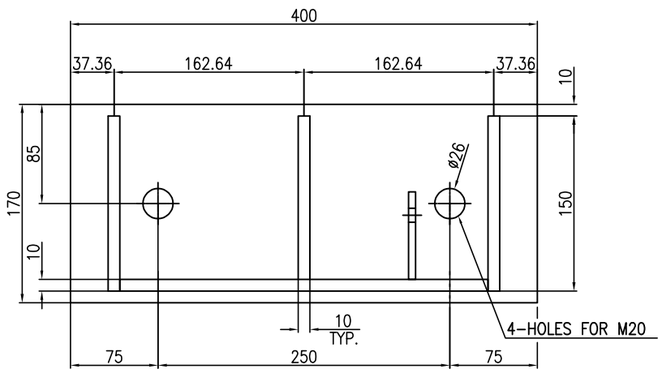

FIXED SADDLE
SECTION "C-C"

SCALE 1:5

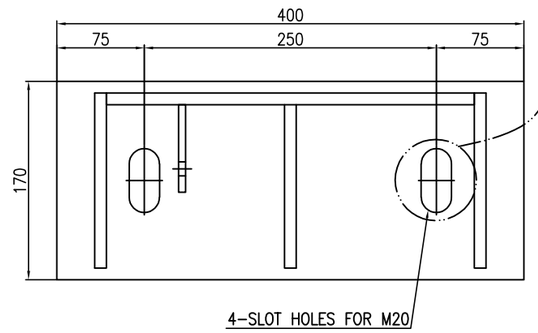

SLIDING SADDLE
SECTION "C-C"

SCALE 1:5

NOTES:

1. ALL DIMENSIONS ARE IN MM UNLESS OTHERWISE NOTED.
2. ALL ELEVATIONS ARE SPECIFIED FROM EQUIPMENT T.L. ±0.00
3. ALL THICKNESS SHOWN IN THE DRAWING ARE INTENDED AS MINIMUM AF
4. UNLESS OTHERWISE NOTED OUTSIDE PROJECTIONS OF NOZZLES ARE MEASURED FROM VESSEL HORIZONTAL C.L. TO THE FLANGES CONTACT FACE. FACE OF RADIAL FLANGES ON SHELL SHALL BE PARALLEL TO C.L.
5. FLANGES FACING TO BE IN ACCORDANCE WITH ASME B.16.5 FOR 24" OR LESS AND ASME B.16.47 SERIES A FOR LARGER.
6. FLANGES FACE FINISHING ARE SERRATED WITH 125 TO 250 MICRO INCH ROUGHNESS AS PER ASME B16.5 FOR 24" AND LESS. ALSO ASME B16.47 SERIES "A" FOR MORE THAN 24".
7. GASKETS SHALL BE SPIRAL WOUND WITH FLEXIBLE GRAPHITE FILLER 4.5MM, HOOP SS316, INNER & OUTER RING SS316.
8. BOLT HOLES FOR FLANGES SHALL BE STRADDLED TO NORTH-SOUTH AND/OR EQUIPMENT C.L.
9. ALL SHARP CORNERS WILL BE ROUNDED OFF.
10. 0.5 BARG ALLOWABLE PRESSURE DROP HAS BEEN CONSIDERED FOR PASS PARTITION DESIGN.
11. TUBE BUNDLE IS REMOVABLE.
12. 1/1.4 FACTOR FOR EARTHQUAKE LOADS AND 0.6 FACTOR FOR WIND LOADS HAS BEEN APPLIED FOR LOAD COMBINATION AS PER ASCE-7 2010.
13. FOR MORE SAFETY 10% CONTINGENCY FACTOR IS CONSIDERED ON BASE LOADS CALCULATIONS . SO , OVER LOADS MAY CHANGE THE LOADS & MOMENTS.
14. SETTING BOLTS HAVE 300 MPa TENSILE ALLOWABLE STRESS AND 180 MPa SHEAR ALLOWABLE STRESS AS MINIMUM.
15. ALL REINFORCED PAD HAVE 1/4" NPT TELLTAIL HOLE WHICH WILL BE PLUGGED WITH GREASE AFTER THE HYDRO TEST.
16. ALL REINFORCED PAD WILL BE AIR LEAK TESTED AT 1 BARG BY USING SOAP SOLUTION.
17. PAINTING WILL BE PERFORMED BASED ON "SURFACE PREPARATION AND INTERNAL/EXTERNAL PAINTING PROCEDURE DOC. NO. BK-GCS-MF-120-QC-PR-0004"
18. PWHT WILL BE PERFORMED BASED ON "PWHT PROCEDURE DOC NO. BK-CGS-MF-120-QC--PR-0006".
19. ALL PRESSURE PARTS BUTT WELDED JOINTS ARE FULLY RADIOGRAPHED.
20. ALL WELDS ARE CONTINUOUS UNLESS OTHERWISE NOTED.
21. WHERE IN ISOLATED CASES REINFORCING PADS COVER VESSEL WELD SEAMS THESE WILL BE GROUND FLUSH AND FULLY RADIOGRAPHED FOR A DISTANCE OF 100MM MEASURED EACH SIDE OF THE COVERED WELD AREA PRIOR TO THE ATTACHMENT OF THE PAD.
22. ALL INTERNAL WELDS WILL BE SMOOTH GRINDED.
23. VESSEL HAS BEEN DESIGNED FOR FIELD HYDROTEST IN CORRODED CONDITION.
24. ALL WET PART MATERIALS MEET "SPECIFICATION FOR MATERIAL REQUIREMENTS IN SOUR SERVICE DOC NO. "BK-GNRAL-PEDCO-000-PI-SP-0008"
25. ALL PRESSURE PARTS ARE NORMALIZED AND COMPLY WITH NACE MR0175/ISO 15156.
26. THE EQUIPMENT IS LOCATED ON SKID AND ELEVATION OF T.O.G. WILL BE FINALIZED LATER.
27. WILL BE FINALIZED BY INTERNAL MANUFACTURER LATER.

ABBREVIATIONS & LEGEND

T.L.	TANGENT LINE	N	NORMALIZED
B.L.	BASE LINE	P.W.H.T.	POST WELD HEAT TREATMENT
C.O.G.	CENTER OF GRAVITY	R.F.	RAISED FACE
EL.	ELEVATION	S.R.	STRESS RELIEVE
F.B.	FLAT BAR	S.F.	STRAIGHT FLANGE
L.L.H.	LIQUID LEVEL HIGH	T.L.	TANGENT LINE
L.L.H.H.	LIQUID LEVEL HIGH HIGH	T.O.G.	TOP OF GROUTING
L.L.L.	LIQUID LEVEL LOW	W.N.	WELDING NECK
L.L.L.L.	LIQUID LEVEL LOW LOW	L.W.L.	LONGITUDINAL WELDING LINE
N.L.L.	NORMAL LIQUID LEVEL	C.W.L.	CIRCUMFERENTIAL WELDING LINE
M.A.W.P.	MAX. ALLOWABLE WORKING PRESSURE	L.W.N.	LONG WELDING NECK
M.D.M.T.	MIN. DESIGN METAL TEMP.	R.T.	RADIOGRAPHY TEST
D.P.	DESIGN PRESSURE	INT.	INTERNAL
J.E.	JOINT EFFICIENCY	EXT.	EXTERNAL
L.	LIQUID	H.P.P.	HIGHEST POINT OF PAVING
V.	VAPOR	THK.	THICKNESS
DWG	DRAWING	N.A.	NOT APPLICABLE

REV.	DATE	P.O.I.S	PREP.	CHK.	APP.	AUT.
V00	DEC.2024	ISSUED FOR APPROVAL	MFS	M.FAKHARIAN	S.FARAMARZPOUR	**.**

REV.	DESCRIPTION	BY	DATE	BY	DATE
		CHECKED		REV. APPR.	

PROJECT NAME: BINAK OILFIELD DEVELOPMENT/SURFACE FACILITIES GAS COMPRESSOR STATION

PROJECT NO.: 971020

EPC CONTRACTOR: HIRGAN ENERGY - DESIGN & INSPECTION COMPANIES

EPD/EPC CONTRACTOR (GC): PETROIRAN DEVELOPMENT COMPANY — PEDCO

BINAK OILFIELD DEVELOPMENT
SURFACE FACILITIES
GAS COMPRESSOR STATION

DATE	SCALE	DRAWING BY	CHECKED BY	PROJECT ENG.

DRAWING TITLE: GENERAL ARRANGEMENT FOR LEAN GLYCOL GAS H.E. (E-300)

SCALE	SIZE	DRAWING NO.	SHEET NO.	REV.
NTS	A3	BK-GCS-MF-120-ME-DW-0023	2 OF 2	V00

NO CONSTRUCTION PERMITTED UNLESS DRAWING APPROVED

APPROVED FOR CONSTRUCTION BY: DATE:

BUDGET REF.	LOCATION	SIZE	CLASS	SERIAL NO.	SHEET	REVISION