طرح نگهداشت و افزایش تولید 27 مخزن

MECHANICAL CALCULATION BOOK FOR STILL COLUMN (C-200)

نگهداشت و افزایش تولید میدان نفتی بینک

V01	MAR. 2025	IFI	MFS	M.Fakharian	S.Faramarzpour	
V00	DEC. 2024	IFA	MFS	M.Fakharian	S.Faramarzpour	
Rev.	**Date**	**Purpose of Issue/Status**	**Prepared by:**	**Checked by:**	**Approved by:**	**CLIENT Approval**

Status:

IFA: Issued For Approval
IFI: Issued For Information
AFC: Approved For Construction

REVISION RECORD SHEET

PAGE	V00	V01	V02	V03	V04
1	X	X			
2	X	X			
3	X	X			
4	X	X			
5	X	X			
6	X	X			
7	X	X			
8	X	X			
9	X	X			
10	X	X			
11	X	X			
12	X	X			
13	X	X			
14	X	X			
15	X	X			
16	X	X			
17	X	X			
18	X	X			
19	X	X			
20	X	X			
21	X	X			
22	X	X			
23	X	X			
24	X	X			
25	X	X			
26	X	X			
27	X	X			
28	X	X			
29	X	X			
30	X	X			
31	X	X			
32	X	X			
33	X	X			
34	X	X			
35	X	X			
36	X	X			
37	X	X			
38	X	X			
39	X	X			
40	X	X			
41	X	X			
42	X	X			
43	X	X			
44	X	X			
45	X	X			
46	X	X			
47	X	X			
48	X	X			
49	X	X			
50	X	X			
51	X	X			
52	X	X			
53	X	X			
54	X	X			
55	X	X			
56	X	X			
57	X	X			
58	X	X			
59	X	X			
60	X	X			
61	X	X			
62	X	X			
63	X	X			
64	X	X			
65	X	X			

PAGE	V00	V01	V02	V03	V04
66	X	X			
67	X	X			
68	X	X			
69	X	X			
70	X	X			
71	X	X			
72	X	X			
73	X	X			
74	X	X			
75	X	X			
76	X	X			
77	X	X			
78	X	X			
79	X	X			
80	X	X			
81	X	X			
82	X	X			
83	X	X			
84	X	X			
85	X	X			
86	X	X			
87	X	X			
88	X	X			
89	X	X			
90	X	X			
91	X	X			
92	X	X			
93	X	X			
94	X	X			
95	X	X			
96	X	X			
97	X	X			
98	X	X			
99	X	X			
100	X	X			
101	X	X			
102	X	X			
103	X	X			
104	X	X			
105	X	X			
106	X	X			
107	X	X			
108	X	X			
109	X	X			
110	X	X			
111	X	X			
112	X	X			
113	X	X			
114	X	X			
115	X	X			
116	X	X			
117	X	X			
118	X	X			
119	X	X			
120	X	X			
121		X			
122		X			
123		X			
124		X			
125		X			
126		X			
127		X			
128		X			
129		X			
130		X			

PAGE	V00	V01	V02	V03	V04
131		X			
132		X			
133		X			
134		X			
135		X			
136		X			
137		X			
138		X			

PAGE	V00	V01	V02	V03	V04

Table of Contents

Cover Sheet 5
Vessel Design Summary: 6
Nozzle Summary: 8
Nozzle Schedule & BOM: 9
MDMT Summary: 11
Warnings and Errors: 12
Input Echo: 13
XY Coordinate Calculations: 22
Flg Calc [Int P]: FLANGE 23
Flg Calc [Int P]: New Flange 27
Flg Calc [Int P]: New Flange 31
Flg Calc [Int P]: New Flange 35
Internal Pressure Calculations: 39
External Pressure Calculations: 42
Element and Detail Weights: 45
Nozzle Flange MAWP: 49
Center of Gravity Calculation: 50
Nozzle Calcs.: N03 (2in) 51
Nozzle Calcs.: N05B (8in) 60
Nozzle Calcs.: N05A (8in) 69
Nozzle Calcs.: K1A (2in) 78
Hydrotest Case: 84
Combination Load Cases: 86
FEA for N05A,B 8INCH: 91
Lifting Lug Calculation - C-200: 129
Lifting WRC: 131

DESIGN CALCULATION

In Accordance with ASME Section VIII Division 1

```
ASME Code Version      : 2019

Analysis Performed by :

Job File               : C:\USERS\TECHNICAL2\DESKTOP\C-200.Pvdb

Date of Analysis       : Mar 4,2025    3:51pm

PV Elite 2020, January 2020
```

ASME Code, Section VIII Division 1, 2019

Diameter Spec : 273.050 mm. OD		
Vessel Design Length, Tangent to Tangent	2524.92	mm.
Distance of Bottom Tangent above Grade	100.00	mm.
Distance of Base above Grade	100.00	mm.
Specified Datum Line Distance	0.00	mm.
Internal Design Temperature	234	°C
Internal Design Pressure	4.000	bars
External Design Temperature	100	°C
External Design Pressure	1.034	bars
Maximum Allowable Working Pressure	10.626	bars
External Max. Allowable Working Pressure	24.197	bars
Hydrostatic Test Pressure	5.200	bars
Required Minimum Design Metal Temperature	5.0	°C
Warmest Computed Minimum Design Metal Temperature	-48.0	°C
Wind Design Code	ASCE-2010	
Earthquake Design Code	ASCE 7-2010	

Materials of Construction:

Component Type	Material	Class	Thickness	UNS #	Normalized	Impact Tested
Shell	SA-312 TP316L	...	...	S31603	No	No
Flange	SA-182 F316L	...	<= 5	S31603	No	No
Flange	SA-312 TP316L	...	...	S31603	No	No
Nozzle	SA-182 F316L	...	<= 5	S31603	No	No
Nozzle	SA-312 TP316L	...	...	S31603	No	No
Re-Pad	SA-516 70	...	...	K02700	No	No
Nozzle Flg	SA-312 TP316	...	...	S31600	No	No
Nozzle Flg	SA-182 F316L	...	<= 5	S31603	No	No
Flg Bolting	SA-193 B7	...	<= 2 1/2	G41400	No	No

Normalized is determined based on the UCS-66 material curve selection and Figure UCS-66.
Impact Tested is based on material selection and material data properties.

Element Pressures and MAWP (bars & mm.):

Element Description or Type	Design Pressure + Stat. head	Ext. Press.	Element M.A.W.P	Corrosion Allowance	Str. Flg. Gov.	In Creep Range
Reboiler Connection	4.098	1.03	11.000	0.0000	N/A	?
Cylinder	4.088	1.03	47.000	0.0000	N/A	?
Body Flg	4.000	1.03	11.000	0.0000	N/A	?
Body Flg	4.000	1.03	11.000	0.0000	N/A	?

Cylinder	4.000	1.03	47.000	0.0000	N/A	?
Reflux Cond. Connection	4.000	1.03	11.000	0.0000	N/A	?

Liquid Level: 1001.60 mm. Dens.: 999.542 kg/m³ Sp. Gr.: 1.000

Element Types and Properties:

Element Type	"To" Elev mm.	Element Length mm.	Nominal Thickness mm.	Finished Thickness mm.	Reqd Thk Internal mm.	Reqd Thk External mm.	Long Eff	Circ Eff
Body Flg	109.3	101.6	...	30.2	...	...	1.00	1.00
Cylinder	1009.3	900.0	9.3	8.1	1.5	1.5	1.00	1.00
Body Flg	1110.9	101.6	...	30.2	...	...	1.00	1.00
Body Flg	1223.3	101.6	...	30.2	...	...	1.00	1.00
Cylinder	2423.3	1200.0	9.3	8.1	1.5	1.7	1.00	1.00
Body Flg	2524.9	101.6	...	30.2	...	...	1.00	1.00

Factored Loads:

Un-Factored Loads:

Local Stress Analysis Results:

Description	Analysis Type	Max Stress Ratio	High Stress Location	Pass Fail
N03 (2in)	WRC-107/537	0.343	n/a	Passed

Weights:

Fabricated	- Bare W/O Removable Internals	435.8	kg.
Shop Test	- Fabricated + Water (Full)	565.2	kg.
Shipping	- Fab. + Rem. Intls.+ Shipping App.	435.8	kg.
Erected	- Fab. + Rem. Intls.+ Insul. (etc)	585.8	kg.
Empty	- Fab. + Intls. + Details + Wghts.	650.9	kg.
Operating	- Empty + Operating Liquid (No CA)	1129.1	kg.
Field Test	- Empty Weight + Water (Full)	586.3	kg.

PV Elite is a trademark of Intergraph CADWorx & Analysis Solutions, Inc. 2020

Nozzle Calculation Summary:

Description	MAWP bars	Ext	MAPNC bars	UG-45	[tr] mm.	Weld Path	Areas or Stresses
N03 (2in)	47	OK	...	OK	1.50	OK	Passed
N05B (8in)	34	OK	...	...		OK	Passed
N05A (8in)	34	OK	...	...		OK	Passed
K1A (2in)	47	OK	...	OK	1.50	OK	Passed

Nozzle MAWP Summary:

```
Minimum MAWP Nozzles          :          34 Nozzle  : N05B (8in)
Minimum MAWP Shells/Flanges   :          11 Element : Reboiler Connection
Minimum MAPnc Shells/Flanges  :          16 Element : Reflux Cond. Connect
-------------------------------------------------------------------------
Computed Vessel M.A.W.P.      :          11 bars
```

Note: MAWPs (Internal Case) shown above are at the High Point.

Check the Spatial Relationship between the Nozzles:

From Node	Nozzle Description	Y Coordinate mm.	Layout Angle deg	Dia. Limit mm.
20	N03 (2in)	909.275	0.000	101.600
20	N05B (8in)	309.275	180.000	409.524
50	N05A (8in)	1423.325	180.000	409.524
50	K1A (2in)	2323.325	0.000	101.600

The nozzle spacing is computed by the following:

= Sqrt($ll^2 + lc^2$) where

ll - Arc length along the inside vessel surface in the long. direction.

lc - Arc length along the inside vessel surface in the circ. direction

If any interferences/violations are found, they will be noted below.

No interference violations have been detected !

PV Elite is a trademark of Intergraph CADWorx & Analysis Solutions, Inc. 2020

Bill of Materials:

QTY	DESCRIPTION	MATERIAL
3	BODY FLANGE: 30.2mm. THK X 254.5mm. OD	SA-182 F316L
1	CYLINDER: 9.3mm. THK X 256.8mm. ID X 900.0mm.	SA-312 TP316L
1	CYLINDER: 9.3mm. THK X 256.8mm. ID X 1200.0mm.	SA-312 TP316L
1	BODY FLANGE: 30.2mm. THK X 254.5mm. OD	SA-312 TP316L
4	INSULATION: 101mm X 60mm THK	
1	PACKING: 650.000mm	...
1	INSULATION: 900mm X 60mm THK	
1	PACKING: 1050.000mm	...
1	INSULATION: 1200mm X 60mm THK	
2	CLASS 150 GR 2.3, 8.0" BLIND FLANGE(S)	SA-312 TP316L
1	GASKET: 317mm. OD X 287mm. ID	...
12	BODY FLANGE BOLTS: 22mm. DIA	SA-193 B7
24	NUTS FOR BODY FLANGE BOLTS: 22mm. DIA	...
1	NAMEPLATE	...

Nozzle Schedule:

Description	Nominal or Actual Size	Schd or FVC Type	Flg Type	Nozzle O/Dia in	Wall Thk mm	Reinforcing Pad Diameter	Reinforcing Pad Thk mm	Cut Length in	Flg Class
N03 (2in)	2.000 in	Actual	LW	3.248	15.850	...	...	164.9	150
K1A (2in)	2.000 in	Actual	LW	3.307	16.600	...	...	165.2	300
N05B (8in)	8.000 in	STD	WN	8.625	8.179	320.00	10.00	220.6	150
N05A (8in)	8.000 in	STD	WN	8.625	8.179	320.00	10.00	220.6	150

General Notes for the above table:

The Cut Length is the Outside Projection + Inside Projection + Drop + In Plane Shell Thickness. This value does not include weld gaps, nor does it account for shrinkage.

In the case of Oblique Nozzles, the Outside Diameter must be increased. The Re-Pad WIDTH around the nozzle is calculated as follows:
Width of Pad = (Pad Outside Dia. (per above) - Nozzle Outside Dia.)/2

For hub nozzles, the thickness and diameter shown are those of the smaller and thinner section.

Nozzle Material and Weld Fillet Leg Size Details (mm.):

Description	Material	Shl Grve Weld	Noz Shl/Pad Weld	Pad OD Weld	Pad Grve Weld	Inside Weld
N03 (2in)	SA-182 F316L	3.667	10.000	...	...	...
K1A (2in)	SA-182 F316L	3.667	10.000	...	...	...
N05B (8in)	SA-312 TP316L	8.112	10.000	8.000	10.000	...
N05A (8in)	SA-312 TP316L	8.112	10.000	8.000	10.000	...

Note: The Outside projections below do not include the flange thickness.

Nozzle Miscellaneous Data:

Description	Elev/Distance From Datum mm.	Layout Angle deg	Proj Outside mm.	Proj Inside mm.	Installed in Component
N03 (2in)	909.275	0.0	150.00	0.00	Node: 20
K1A (2in)	2323.325	0.0	150.00	0.00	Node: 50
N05B (8in)	309.275	180.0	150.00	0.00	Node: 20
N05A (8in)	1423.325	180.0	150.00	0.00	Node: 50

PV Elite is a trademark of Intergraph CADWorx & Analysis Solutions, Inc. 2020

Minimum Design Metal Temperature Results Summary :

Description	Notes	Curve	Basic MDMT °C	Reduced MDMT °C	UG-20(f) MDMT °C	Thickness ratio	Gov Thk mm.	E*	PWHT reqd
	[16]		-196						
	[16]		-196						
N03 (2in)	[15]		-196						
N05B (8in)	[1]	B	-29	-104	-29	0.051	7.156	1.00	Yes
N05A (8in)	[1]	B	-29	-104	-29	0.050	7.156	1.00	Yes
K1A (2in)	[15]		-196						
Bolting	[21]		-48						
Bolting	[21]		-48						
Bolting	[21]		-48						
Warmest MDMT:			-29	-104					

Required Minimum Design Metal Temperature 5.0 °C
Warmest Computed Minimum Design Metal Temperature -48.0 °C

Notes:
[!] - This was an impact tested material.
[1] - Governing Nozzle Weld.
[4] - ANSI Flange MDMT Calcs; Thickness ratio per UCS-66(b)(1)(-c).
[5] - ANSI Flange MDMT Calcs; Thickness ratio per UCS-66(b)(1)(-b).
[6] - MDMT Calculations at the Shell/Head Joint.
[7] - MDMT Calculations for the Straight Flange.
[8] - Cylinder/Cone/Flange Junction MDMT.
[9] - Calculations in the Spherical Portion of the Head.
[10] - Calculations in the Knuckle Portion of the Head.
[11] - Calculated (Body Flange) Flange MDMT.
[12] - Calculated Flat Head MDMT per UCS-66.3
[13] - Tubesheet MDMT, shell side, if applicable
[14] - Tubesheet MDMT, tube side, if applicable
[15] - Nozzle Material
[16] - Shell or Head Material
[17] - Impact Testing required
[18] - Impact Testing not required, see UCS-66(b)(3)
[20] - Cylinder/Cone Junction MDMT based on Longitudinal Stress considerations
[21] - Bolting Material

UG-84(b)(2) was not considered.
UCS-66(g) was not considered.
UCS-66(i) was not considered.

Notes:
Impact test temps were not entered in and not considered in the analysis.
UCS-66(i) applies to impact tested materials not by specification and
UCS-66(g) applies to materials impact tested per UG-84.1 General Note (c).
The Basic MDMT includes the (30F) PWHT credit if applicable.

PV Elite is a trademark of Intergraph CADWorx & Analysis Solutions, Inc. 2020

```
Class From To : Basic Element Checks.
==========================================================================

Class From To: Check of Additional Element Data
==========================================================================
```

There were no geometry errors or warnings.

PV Elite is a trademark of Intergraph CADWorx & Analysis Solutions, Inc. 2020

PV Elite Vessel Analysis Program: Input Data

Design Internal Pressure (for Hydrotest)	4	bars
Design Internal Temperature	234.0	°C
Type of Hydrotest	UG-99(b) Note [36]	
Hydrotest Position	Vertical	
Projection of Nozzle from Vessel Top	0	mm.
Projection of Nozzle from Vessel Bottom	0	mm.
Minimum Design Metal Temperature	5.0	°C
Type of Construction	Welded	
Special Service	Lethal	
Degree of Radiography	RT-1	
Use Higher Longitudinal Stresses (Flag)	N	
Select t for Internal Pressure (Flag)	N	
Select t for External Pressure (Flag)	N	
Select t for Axial Stress (Flag)	N	
Select Location for Stiff. Rings (Flag)	N	
Consider Vortex Shedding	N	
Perform a Corroded Hydrotest	Y	

Load Case 1	NP+EW+WI+FW+BW
Load Case 2	NP+EW+EE+FS+BS
Load Case 3	NP+OW+WI+FW+BW
Load Case 4	NP+OW+EQ+FS+BS
Load Case 5	NP+HW+HI
Load Case 6	NP+HW+HE
Load Case 7	IP+OW+WI+FW+BW
Load Case 8	IP+OW+EQ+FS+BS
Load Case 9	EP+OW+WI+FW+BW
Load Case 10	EP+OW+EQ+FS+BS
Load Case 11	HP+HW+HI
Load Case 12	HP+HW+HE
Load Case 13	IP+WE+EW
Load Case 14	IP+WF+CW
Load Case 15	IP+VO+OW
Load Case 16	IP+VE+EW
Load Case 17	NP+VO+OW
Load Case 18	FS+BS+IP+OW
Load Case 19	FS+BS+EP+OW

Wind Design Code	ASCE-7 2010	
Wind Load Reduction Scale Factor	0.600	
Basic Wind Speed [V]	232	Km/hr
Surface Roughness Category	C: Open Terrain	
Importance Factor	1.0	
Type of Surface	Moderately Smooth	
Base Elevation	100	mm.
Percent Wind for Hydrotest	33.0	
Using User defined Wind Press. Vs Elev.	N	
Height of Hill or Escarpment H or Hh	0	mm.
Distance Upwind of Crest Lh	0	mm.
Distance from Crest to the Vessel x	0	mm.
Type of Terrain (Hill, Escarpment)	Flat	

```
Damping Factor (Beta) for Wind (Ope)                    0.0100
Damping Factor (Beta) for Wind (Empty)                  0.0000
Damping Factor (Beta) for Wind (Filled)                 0.0000

Seismic Design Code                               ASCE 7-2010
Seismic Load Reduction Scale Factor                     0.700
Importance Factor                                       1.250
Table Value Fa                                          1.000
Table Value Fv                                          1.330
Short Period Acceleration value Ss                      1.125
Long Period Acceleration Value Sl                       0.460
Moment Reduction Factor Tau                             1.000
Force Modification Factor R                             2.500
Site Class                                                  D
Component Elevation Ratio            z/h                1.000
Amplification Factor                  Ap                2.500
Force Factor                                            0.000
Consider Vertical Acceleration                            Yes
Minimum Acceleration Multiplier                         0.000
User Value of Sds (used if > 0 )                        1.020
User Value of Sd1 (used if > 0 )                        0.385

Design Pressure + Static Head                               Y
Consider MAP New and Cold in Noz. Design                    N
Consider External Loads for Nozzle Des.                     Y
Use ASME VIII-1 Appendix 1-9                                N

Material Database Year        Current w/Addenda or Code Year
```

Configuration Directives:

```
Do not use Nozzle MDMT Interpretation VIII-1 01-37        No
Use Table G instead of exact equation for "A"            Yes
Shell Head Joints are Tapered                            Yes
Compute "K" in corroded condition                        Yes
Use Code Case 2286                                        No
Use the MAWP to compute the MDMT                         Yes
For thickness ratios <= 0.35, MDMT will be -155F (-104C) Yes
For PWHT & P1 Materials the MDMT can be < -55F (-48C)     No

Using Metric Material Databases, ASME II D                No
Calculate B31.3 type stress for Nozzles with Loads       Yes
Reduce the MDMT due to lower membrane stress             Yes
Consider Longitudinal Stress in MDMT calcs. (Div. 1)     Yes
```

Complete Listing of Vessel Elements and Details:

```
Element From Node                                        10
Element To Node                                          20
Element Type                                        Flange
Description                              Reboiler Connection
Distance "FROM" to "TO"                               101.6  mm.
Flange Inside Diameter                                254.51  mm.
Element Thickness                                     30.226  mm.
Internal Corrosion Allowance                               0  mm.
```

```
Nominal Thickness                                    0  mm.
External Corrosion Allowance                         0  mm.
Design Internal Pressure                             4  bars
Design Temperature Internal Pressure               234  °C
Design External Pressure                         1.034  bars
Design Temperature External Pressure               100  °C
Effective Diameter Multiplier                      1.2
Material Name                            SA-182 F316L
    Allowable Stress, Ambient                    115.1  N./mm²
    Allowable Stress, Operating                   77.7  N./mm²
    Allowable Stress, Hydrotest                  155.1  N./mm²
    Material Density                            8027.2  kg/m³
    P Number Thickness                               0  mm.
    Yield Stress, Operating                      116.6  N./mm²
    External Pressure Chart Name                  HA-4
    UNS Number                                  S31603
    Class / Thickness / Grade     :: <= 5
    Product Form                              Forgings
Perform Flange Stress Calculation (Y/N)               Y
Weight of Standard Flange                            0  kN
Class of Standard Flange
Grade of Standard Flange
Weld is pre-Heated                                  No

    Element From Node                               10
    Detail Type                                 Liquid
    Detail ID                             Liquid: 10
    Dist. from "FROM" Node / Offset dist             0  mm.
    Height/Length of Liquid                      101.6  mm.
    Liquid Density                              999.54  kg/m³

    Element From Node                               10
    Detail Type                           Insulation
    Detail ID                               Ins: 10
    Dist. from "FROM" Node / Offset dist             0  mm.
    Height/Length of Insulation                  101.6  mm.
    Thickness of Insulation                         60  mm.
    Density                                        125  kg/m³

-----------------------------------------------------------------------

Element From Node                                   20
Element To Node                                     30
Element Type                                  Cylinder
Description
Distance "FROM" to "TO"                            900  mm.
Element Outside Diameter                        273.05  mm.
Element Thickness                               8.1121  mm.
Internal Corrosion Allowance                         0  mm.
Nominal Thickness                                9.271  mm.
External Corrosion Allowance                         0  mm.
Design Internal Pressure                             4  bars
Design Temperature Internal Pressure               234  °C
Design External Pressure                         1.034  bars
Design Temperature External Pressure               100  °C
```

Effective Diameter Multiplier	1.2	
Material Name	SA-312 TP316L	
Allowable Stress, Ambient	115.15	N./mm²
Allowable Stress, Operating	77.739	N./mm²
Allowable Stress, Hydrotest	155.14	N./mm²
Material Density	8027.2	kg/m³
P Number Thickness	0	mm.
Yield Stress, Operating	116.63	N./mm²
External Pressure Chart Name	HA-4	
UNS Number	S31603	
Product Form	Smls. pipe	
Efficiency, Longitudinal Seam	1.0	
Efficiency, Circumferential Seam	1.0	
Weld is pre-Heated	No	
Element From Node	20	
Detail Type	Packing	
Detail ID	Pack: [1 of 1]	
Dist. from "FROM" Node / Offset dist	50	mm.
Height of Packed Section	650	mm.
Density	500	kg/m³
Percent Volume Holdup	30.0	
Specific Gravity of Packing Liquid	1.0	
Element From Node	20	
Detail Type	Liquid	
Detail ID	Liquid: 20	
Dist. from "FROM" Node / Offset dist	0	mm.
Height/Length of Liquid	900	mm.
Liquid Density	999.54	kg/m³
Element From Node	20	
Detail Type	Insulation	
Detail ID	Ins: 20	
Dist. from "FROM" Node / Offset dist	0	mm.
Height/Length of Insulation	900	mm.
Thickness of Insulation	60	mm.
Density	125	kg/m³
Element From Node	20	
Detail Type	Nozzle	
Detail ID	N03 (2in)	
Dist. from "FROM" Node / Offset dist	800	mm.
Nozzle Diameter	2	in.
Nozzle Schedule	None	
Nozzle Class	150	
Layout Angle	0.0	
Blind Flange (Y/N)	N	
Weight of Nozzle (Used if > 0)	0.07334	kN
Grade of Attached Flange	GR 2.2	
Nozzle Matl	SA-182 F316L	
Element From Node	20	
Detail Type	Nozzle	
Detail ID	N05B (8in)	

```
    Dist. from "FROM" Node / Offset dist                 200  mm.
    Nozzle Diameter                                        8  in.
    Nozzle Schedule                                      STD
    Nozzle Class                                         150
    Layout Angle                                       180.0
    Blind Flange (Y/N)                                     Y
    Weight of Nozzle ( Used if > 0 )                  0.4956  kN
    Grade of Attached Flange                          GR 2.3
    Nozzle Matl                                 SA-312 TP316L

    Element From Node                                     20
    Detail Type                                       Weight
    Detail ID                                 SUPPORT GRID 1
    Dist. from "FROM" Node / Offset dist                  50  mm.
    Miscellaneous Weight                              0.4903  kN
    Offset from Element Centerline                         0  mm.

    Element From Node                                     20
    Detail Type                                       Weight
    Detail ID                                  BED LIMMITER
    Dist. from "FROM" Node / Offset dist                 700  mm.
    Miscellaneous Weight                              0.2451  kN
    Offset from Element Centerline                         0  mm.

    Element From Node                                     20
    Detail Type                                       Weight
    Detail ID                                     N03 INLET
    Dist. from "FROM" Node / Offset dist                 800  mm.
    Miscellaneous Weight                              0.4903  kN
    Offset from Element Centerline                         0  mm.

-----------------------------------------------------------------------

Element From Node                                         30
Element To Node                                           40
Element Type                                        Flange
Description
Distance "FROM" to "TO"                               101.6  mm.
Flange Inside Diameter                               254.51  mm.
Element Thickness                                    30.226  mm.
Internal Corrosion Allowance                               0  mm.
Nominal Thickness                                          0  mm.
External Corrosion Allowance                               0  mm.
Design Internal Pressure                                   4  bars
Design Temperature Internal Pressure                     234  °C
Design External Pressure                               1.034  bars
Design Temperature External Pressure                     100  °C
Effective Diameter Multiplier                            1.2
Material Name                                   SA-182 F316L
    Allowable Stress, Ambient                          115.1  N./mm²
    Allowable Stress, Operating                         77.7  N./mm²
    Allowable Stress, Hydrotest                        155.1  N./mm²
    Material Density                                  8027.2  kg/m³
    P Number Thickness                                     0  mm.
    Yield Stress, Operating                            116.6  N./mm²
```

```
    External Pressure Chart Name                          HA-4
    UNS Number                                          S31603
    Class / Thickness / Grade     :: <= 5
    Product Form                                      Forgings
Perform Flange Stress Calculation (Y/N)                      Y
Weight of Standard Flange                                    0  kN
Class of Standard Flange
Grade of Standard Flange
Weld is pre-Heated                                          No

    Element From Node                                       30
    Detail Type                                     Insulation
    Detail ID                                          Ins: 30
    Dist. from "FROM" Node / Offset dist                     0  mm.
    Height/Length of Insulation                          101.6  mm.
    Thickness of Insulation                                 60  mm.
    Density                                                125  kg/m³

-------------------------------------------------------------------

Element From Node                                           40
Element To Node                                             50
Element Type                                           Flange
Description
Distance "FROM" to "TO"                                  101.6  mm.
Flange Inside Diameter                                  254.51  mm.
Element Thickness                                       30.226  mm.
Internal Corrosion Allowance                                 0  mm.
Nominal Thickness                                            0  mm.
External Corrosion Allowance                                 0  mm.
Design Internal Pressure                                     4  bars
Design Temperature Internal Pressure                       234  °C
Design External Pressure                                 1.034  bars
Design Temperature External Pressure                       100  °C
Effective Diameter Multiplier                              1.2
Material Name                                     SA-182 F316L
Perform Flange Stress Calculation (Y/N)                      Y
Weight of Standard Flange                                    0  kN
Class of Standard Flange
Grade of Standard Flange
Weld is pre-Heated                                          No

    Element From Node                                       40
    Detail Type                                     Insulation
    Detail ID                                          Ins: 40
    Dist. from "FROM" Node / Offset dist                     0  mm.
    Height/Length of Insulation                          101.6  mm.
    Thickness of Insulation                                 60  mm.
    Density                                                125  kg/m³

-------------------------------------------------------------------

Element From Node                                           50
Element To Node                                             60
Element Type                                          Cylinder
```

Description		
Distance "FROM" to "TO"	1200	mm.
Element Outside Diameter	273.05	mm.
Element Thickness	8.1121	mm.
Internal Corrosion Allowance	0	mm.
Nominal Thickness	9.271	mm.
External Corrosion Allowance	0	mm.
Design Internal Pressure	4	bars
Design Temperature Internal Pressure	234	°C
Design External Pressure	1.034	bars
Design Temperature External Pressure	100	°C
Effective Diameter Multiplier	1.2	
Material Name	SA-312 TP316L	
Allowable Stress, Ambient	115.15	N./mm²
Allowable Stress, Operating	77.739	N./mm²
Allowable Stress, Hydrotest	155.14	N./mm²
Material Density	8027.2	kg/m³
P Number Thickness	0	mm.
Yield Stress, Operating	116.63	N./mm²
External Pressure Chart Name	HA-4	
UNS Number	S31603	
Product Form	Smls. pipe	
Efficiency, Longitudinal Seam	1.0	
Efficiency, Circumferential Seam	1.0	
Weld is pre-Heated	No	
Element From Node	50	
Detail Type	Packing	
Detail ID	Pack: [1 of 1]	
Dist. from "FROM" Node / Offset dist	50	mm.
Height of Packed Section	1050	mm.
Density	500	kg/m³
Percent Volume Holdup	30.0	
Specific Gravity of Packing Liquid	1.0	
Element From Node	50	
Detail Type	Insulation	
Detail ID	Ins: 50	
Dist. from "FROM" Node / Offset dist	0	mm.
Height/Length of Insulation	1200	mm.
Thickness of Insulation	60	mm.
Density	125	kg/m³
Element From Node	50	
Detail Type	Nozzle	
Detail ID	N05A (8in)	
Dist. from "FROM" Node / Offset dist	200	mm.
Nozzle Diameter	8	in.
Nozzle Schedule	STD	
Nozzle Class	150	
Layout Angle	180.0	
Blind Flange (Y/N)	Y	
Weight of Nozzle (Used if > 0)	0.4956	kN
Grade of Attached Flange	GR 2.3	
Nozzle Matl	SA-312 TP316L	

```
    Element From Node                                    50
    Detail Type                                      Nozzle
    Detail ID                                     K1A (2in)
    Dist. from "FROM" Node / Offset dist               1100  mm.
    Nozzle Diameter                                       2  in.
    Nozzle Schedule                                    None
    Nozzle Class                                        300
    Layout Angle                                        0.0
    Blind Flange (Y/N)                                    N
    Weight of Nozzle ( Used if > 0 )                0.08761  kN
    Grade of Attached Flange                         GR 2.2
    Nozzle Matl                                  SA-182 F316L

    Element From Node                                    50
    Detail Type                                      Weight
    Detail ID                                  SUPPORT GRID 2
    Dist. from "FROM" Node / Offset dist                 50  mm.
    Miscellaneous Weight                             0.4903  kN
    Offset from Element Centerline                        0  mm.

    Element From Node                                    50
    Detail Type                                      Weight
    Detail ID                                   BED LIMMETER
    Dist. from "FROM" Node / Offset dist               1100  mm.
    Miscellaneous Weight                             0.2451  kN
    Offset from Element Centerline                        0  mm.

-----------------------------------------------------------------------

Element From Node                                        60
Element To Node                                          70
Element Type                                         Flange
Description                          Reflux Cond. Connection
Distance "FROM" to "TO"                               101.6  mm.
Flange Inside Diameter                                254.51  mm.
Element Thickness                                     30.226  mm.
Internal Corrosion Allowance                               0  mm.
Nominal Thickness                                          0  mm.
External Corrosion Allowance                               0  mm.
Design Internal Pressure                                   4  bars
Design Temperature Internal Pressure                     234  °C
Design External Pressure                               1.034  bars
Design Temperature External Pressure                     100  °C
Effective Diameter Multiplier                            1.2
Material Name                                   SA-312 TP316L
Perform Flange Stress Calculation (Y/N)                    Y
Weight of Standard Flange                                  0  kN
Class of Standard Flange
Grade of Standard Flange
Weld is pre-Heated                                        No

    Element From Node                                    60
    Detail Type                                   Insulation
    Detail ID                                        Ins: 60
```

```
Dist. from "FROM" Node / Offset dist                    0  mm.
Height/Length of Insulation                         101.6  mm.
Thickness of Insulation                                60  mm.
Density                                               125  kg/m³

Element From Node                                      60
Detail Type                                        Weight
Detail ID                                     E-100 WEIGHT
Dist. from "FROM" Node / Offset dist                  101  mm.
Miscellaneous Weight                               3.4321  kN
Offset from Element Centerline                          0  mm.

Element From Node                                      60
Detail Type                                        Weight
Detail ID                                          PIPING
Dist. from "FROM" Node / Offset dist                  101  mm.
Miscellaneous Weight                               0.4903  kN
Offset from Element Centerline                        660  mm.
```

PV Elite is a trademark of Intergraph CADWorx & Analysis Solutions, Inc. 2020

XY Coordinate Calculations:

From	To	X (Horiz.) mm.	Y (Vert.) mm.	DX (Horiz.) mm.	DY (Vert.) mm.
Reboiler Connec		...	109.275	...	101.6
20	30	...	1009.27	...	900
30	40	...	1110.87	...	101.6
40	50	...	1223.32	...	101.6
50	60	...	2423.32	...	1200
Reflux Cond. Co		...	2524.92	...	101.6

PV Elite is a trademark of Intergraph CADWorx & Analysis Solutions, Inc. 2020

Flange Input Data Values **Description: FLANGE :**

Reboiler Connection

Description of Flange Geometry (Type)		Integral Weld Neck	
Design Pressure	P	4.10	bars
Design Temperature		234	°C
Internal Corrosion Allowance	ci	0.0000	mm.
External Corrosion Allowance	ce	0.0000	mm.
Use Corrosion Allowance in Thickness Calcs.		Yes	
Flange Inside Diameter	B	254.508	mm.
Flange Outside Diameter	A	406.400	mm.
Flange Thickness	t	30.2260	mm.
Thickness of Hub at Small End	go	5.5563	mm.
Thickness of Hub at Large End	g1	21.4312	mm.
Length of Hub	h	71.3740	mm.
Flange Material		SA-182 F316L	
Flange Material UNS number		S31603	
Flange Allowable Stress At Temperature	Sfo	77.70	N./mm²
Flange Allowable Stress At Ambient	Sfa	115.10	N./mm²
Bolt Material		SA-193 B7	
Bolt Allowable Stress At Temperature	Sb	172.38	N./mm²
Bolt Allowable Stress At Ambient	Sa	172.38	N./mm²
Diameter of Bolt Circle	C	361.950	mm.
Nominal Bolt Diameter	a	22.2250	mm.
Type of Threads		TEMA Thread Series	
Number of Bolts		12	
Flange Face Outside Diameter	Fod	323.850	mm.
Flange Face Inside Diameter	Fid	254.508	mm.
Flange Facing Sketch		1, Code Sketch 1a	
Gasket Outside Diameter	Go	317.500	mm.
Gasket Inside Diameter	Gi	287.274	mm.
Gasket Factor	m	3.0000	
Gasket Design Seating Stress	y	68.95	N./mm²
Column for Gasket Seating		2, Code Column II	
Gasket Thickness	tg	4.5000	mm.
Axial Force on Flange		4.00	kN
Bending Moment on Flange		0.00	N-m
Flange Class		150	
Flange Grade		GR 2.3	
Flange Series	Series	A	

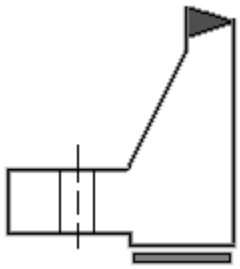

ASME Code, Section VIII Division 1, 2019

Hub Small End Required Thickness due to Internal Pressure:

```
= (P*(D/2+Ca))/(S*E-0.6*P) per UG-27 (c)(1)
= (4.1*(254.508/2+0.0))/(77.7*1.0-0.6*4.1)+Ca
= 0.6734 mm.
```

Hub Small End Hub MAWP:

```
= (S*E*t)/(R+0.6*t) per UG-27 (c)(1)
= (77.7 * 1.0 * 5.5563)/(127.254 + 0.6 * 5.5563 )
= 33.058 bars
```

```
Corroded Flange ID,       Bcor = B+2*Fcor                 254.508  mm.
Corroded Large Hub,      g1Cor = g1-ci                     21.431  mm.
Corroded Small Hub,      g0Cor = go-ci                      5.556  mm.
Code R Dimension,            R = (C-B)/2 - g1              32.290  mm.

Gasket Contact Width,        N = (Go - Gi) / 2             15.113  mm.
Basic Gasket Width,         bo = N / 2                      7.557  mm.
Effective Gasket Width,      b = Cb sqrt(bo)                6.927  mm.
Gasket Reaction Diameter,    G = Go - 2 * b               303.646  mm.

Original Design Pressure for Flange                         4.098  bars
Axial Force Equiv. Pressure (4*max(F,0)/(pi*G^2))           0.552  bars
Bending Moment Equiv. Pressure (16*abs(M)/(pi*G^3))         0.000  bars
                                                         ---------
Final Equivalent Design Pressure                            4.651  bars
```

Note:
Per ASME NC-3658.1(b), the equivalent pressure is used only to compute the Hydrostatic End Load H. The original design pressure is used in the remaining calculations.

<u>Basic Flange and Bolt Loads:</u>

Hydrostatic End Load due to Pressure [H]:

$= 0.785 * G^2 * Peq$
$= 0.785 * 303.6459^2 * 4.651$
$= 33.676$ kN

Contact Load on Gasket Surfaces [Hp]:

```
= 2 * b * Pi * G * m * P
= 2 * 6.927 * 3.1416 * 303.6459 * 3.0 * 4.1
```

```
  = 16.248 kN
```

Hydrostatic End Load at Flange ID [Hd]:

```
  = Pi * Bcor² * P  / 4
  = 3.1416 * 254.508² *4.0982/4
  = 20.848 kN
```

Pressure Force on Flange Face [Ht]:

```
  = H - Hd
  = 34 - 21
  = 12.828 kN
```

Operating Bolt Load [Wm1]:

```
  = max( H + Hp + H'p, 0 )
  = max( 34 + 16 + 0, 0 )
  = 49.924 kN
```

Gasket Seating Bolt Load [Wm2]:

```
  = y * b * Pi * G  + yPart * bPart * lp
  = 68.95*6.927*3.141*303.646+0.0*0.0*0.0
  = 455.577 kN
```

Required Bolt Area [Am]:

```
  = Maximum of Wm1/Sb, Wm2/Sa
  = Maximum of 50/172, 456/172
  = 26.432 cm²
```

Min. Gasket Contact Width (Brownell Young) [Not an ASME Calc] [Nmin]:

```
  = Ab * Sa/( y * Pi * (Go + Gi) )
  = 32.439 * 172.38/(68.95 * 3.14 * (317.5 + 287.27) )
  = 4.268 mm.
```

Flange Design Bolt Load, Gasket Seating [W]:

```
  = Sa * ( Am + Ab ) / 2
  = 172.38 * ( 26.4317 + 32.4386 )/2
  = 507.35 kN
```

Gasket Load for the Operating Condition [HG]:

```
  = Wm1 - H
  = 50 - 34
  = 16.25 kN
```

Moment Arm Calculations:

Distance to Gasket Load Reaction [hg]:

```
  = (C - G ) / 2
  = ( 361.95 - 303.6459 )/2
  = 29.1520 mm.
```

Distance to Face Pressure Reaction [ht]:

```
  = ( R + g1 + hg ) / 2
  = ( 32.2898 + 21.4312 + 29.152 )/2
  = 41.4365 mm.
```

Distance to End Pressure Reaction [hd]:

```
  = R + ( g1 / 2 )
  = 32.2898 + ( 21.4312/2.0 )
  = 43.0054 mm.
```

Summary of Moments for Internal Pressure: (N-m)

Loading		Force	Distance	Bolt Corr	Moment
End Pressure,	Md	21.	43.0054	1.1200	1005.
Face Pressure,	Mt	13.	41.4365	1.1200	596.
Gasket Load,	Mg	16.	29.1520	1.1200	531.
Gasket Seating,	Matm	507.	29.1520	1.1200	16572.

Total Moment for Operation, Mop 2131. N-m
Total Moment for Gasket seating, Matm 16572. N-m

You chose not to perform Stress Calculations on this Standard Flange.
The pressure rating of the flange will be used to check code compliance.

Estimated Finished Weight of Flange at given Thk. 25.6 kg.
Estimated Unfinished Weight of Forging at given Thk 64.3 kg.

Note:
The flange pressure ratio is less than 0.35. Impact testing is not required due to low stress per UHA-51(g).

Design Pressure/Ambient Rating = 4.10/15.90 = 0.258

PV Elite is a trademark of Intergraph CADWorx & Analysis Solutions, Inc. 2020

Flange Input Data Values **Description: New Flange :**

Item: Node 30 to 40

Description of Flange Geometry (Type)		Integral Weld Neck	
Design Pressure	P	4.00	bars
Design Temperature		234	°C
Internal Corrosion Allowance	ci	0.0000	mm.
External Corrosion Allowance	ce	0.0000	mm.
Use Corrosion Allowance in Thickness Calcs.		Yes	
Flange Inside Diameter	B	254.508	mm.
Flange Outside Diameter	A	406.400	mm.
Flange Thickness	t	30.2260	mm.
Thickness of Hub at Small End	go	5.5563	mm.
Thickness of Hub at Large End	g1	21.4312	mm.
Length of Hub	h	71.3740	mm.
Flange Material		SA-182 F316L	
Flange Material UNS number		S31603	
Flange Allowable Stress At Temperature	Sfo	77.70	N./mm²
Flange Allowable Stress At Ambient	Sfa	115.10	N./mm²
Bolt Material		SA-193 B7	
Bolt Allowable Stress At Temperature	Sb	172.38	N./mm²
Bolt Allowable Stress At Ambient	Sa	172.38	N./mm²
Diameter of Bolt Circle	C	361.950	mm.
Nominal Bolt Diameter	a	22.2250	mm.
Type of Threads		TEMA Thread Series	
Number of Bolts		12	
Flange Face Outside Diameter	Fod	323.850	mm.
Flange Face Inside Diameter	Fid	254.508	mm.
Flange Facing Sketch		1, Code Sketch 1a	
Gasket Outside Diameter	Go	317.500	mm.
Gasket Inside Diameter	Gi	287.274	mm.
Gasket Factor	m	3.0000	
Gasket Design Seating Stress	y	68.95	N./mm²
Column for Gasket Seating		2, Code Column II	
Gasket Thickness	tg	4.5000	mm.
Flange Class		150	
Flange Grade		GR 2.3	
Flange Series	Series	A	

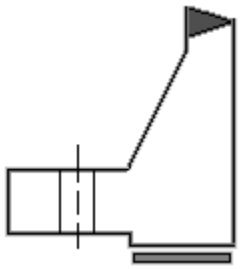

ASME Code, Section VIII Division 1, 2019

Hub Small End Required Thickness due to Internal Pressure:
```
= (P*(D/2+Ca))/(S*E-0.6*P) per UG-27 (c)(1)
= (4.0*(254.508/2+0.0))/(77.7*1.0-0.6*4.0)+Ca
= 0.6572 mm.
```

Hub Small End Hub MAWP:
```
= (S*E*t)/(R+0.6*t) per UG-27 (c)(1)
= (77.7 * 1.0 * 5.5563)/(127.254 + 0.6 * 5.5563 )
= 33.058 bars
```

```
Corroded Flange ID,      Bcor = B+2*Fcor              254.508  mm.
Corroded Large Hub,     g1Cor = g1-ci                  21.431  mm.
Corroded Small Hub,     g0Cor = go-ci                   5.556  mm.
Code R Dimension,           R = (C-B)/2 - g1           32.290  mm.

Gasket Contact Width,       N = (Go - Gi) / 2          15.113  mm.
Basic Gasket Width,        bo = N / 2                   7.557  mm.
Effective Gasket Width,     b = Cb sqrt(bo)             6.927  mm.
Gasket Reaction Diameter,   G = Go - 2 * b             303.646  mm.
```

<u>Basic Flange and Bolt Loads:</u>

Hydrostatic End Load due to Pressure [H]:
```
= 0.785 * G² * Peq
= 0.785 * 303.6459² * 4.0
= 28.965 kN
```
Contact Load on Gasket Surfaces [Hp]:
```
= 2 * b * Pi * G * m * P
= 2 * 6.927 * 3.1416 * 303.6459 * 3.0 * 4.0
= 15.859 kN
```
Hydrostatic End Load at Flange ID [Hd]:
```
= Pi * Bcor² * P  / 4
= 3.1416 * 254.508² *4.0/4
= 20.349 kN
```
Pressure Force on Flange Face [Ht]:
```
= H - Hd
= 29 - 20
= 8.616 kN
```
Operating Bolt Load [Wm1]:
```
= max( H + Hp + H'p, 0 )
```

```
  = max( 29 + 16 + 0, 0 )
  = 44.824 kN
```

Gasket Seating Bolt Load [Wm2]:

```
  = y * b * Pi * G  + yPart * bPart * lp
  = 68.95*6.927*3.141*303.646+0.0*0.0*0.0
  = 455.577 kN
```

Required Bolt Area [Am]:

```
  = Maximum of Wm1/Sb, Wm2/Sa
  = Maximum of 45/172, 456/172
  = 26.432 cm²
```

Min. Gasket Contact Width (Brownell Young) [Not an ASME Calc] [Nmin]:

```
  = Ab * Sa/( y * Pi * (Go + Gi) )
  = 32.439 * 172.38/(68.95 * 3.14 * (317.5 + 287.27) )
  = 4.268 mm.
```

Flange Design Bolt Load, Gasket Seating [W]:

```
  = Sa * ( Am + Ab ) / 2
  = 172.38 * ( 26.4317 + 32.4386 )/2
  = 507.35 kN
```

Gasket Load for the Operating Condition [HG]:

```
  = Wm1 - H
  = 45 - 29
  = 15.86 kN
```

Moment Arm Calculations:

Distance to Gasket Load Reaction [hg]:

```
  = (C - G ) / 2
  = ( 361.95 - 303.6459 )/2
  = 29.1520 mm.
```

Distance to Face Pressure Reaction [ht]:

```
  = ( R + g1 + hg ) / 2
  = ( 32.2898 + 21.4312 + 29.152 )/2
  = 41.4365 mm.
```

Distance to End Pressure Reaction [hd]:

```
  = R + ( g1 / 2 )
  = 32.2898 + ( 21.4312/2.0 )
  = 43.0054 mm.
```

Summary of Moments for Internal Pressure: (N-m)

Loading		Force	Distance	Bolt Corr	Moment
End Pressure,	Md	20.	43.0054	1.1200	981.
Face Pressure,	Mt	9.	41.4365	1.1200	400.
Gasket Load,	Mg	16.	29.1520	1.1200	518.
Gasket Seating,	Matm	507.	29.1520	1.1200	16572.

```
Total Moment for Operation,      Mop                                  1899. N-m
Total Moment for Gasket seating, Matm                                16572. N-m
```

You chose not to perform Stress Calculations on this Standard Flange.
The pressure rating of the flange will be used to check code compliance.

```
Estimated Finished Weight of Flange at given Thk.        25.6 kg.
Estimated Unfinished Weight of Forging at given Thk      64.3 kg.
```

Note:
The flange pressure ratio is less than 0.35. Impact testing is not required due to low stress per UHA-51(g).

Design Pressure/Ambient Rating = 4.00/15.90 = 0.252

PV Elite is a trademark of Intergraph CADWorx & Analysis Solutions, Inc. 2020

Flange Input Data Values **Description: New Flange :**

Item: Node 40 to 50

Description of Flange Geometry (Type)		Integral Weld Neck	
Design Pressure	P	4.00	bars
Design Temperature		234	°C
Internal Corrosion Allowance	ci	0.0000	mm.
External Corrosion Allowance	ce	0.0000	mm.
Use Corrosion Allowance in Thickness Calcs.		Yes	
Flange Inside Diameter	B	254.508	mm.
Flange Outside Diameter	A	406.400	mm.
Flange Thickness	t	30.2260	mm.
Thickness of Hub at Small End	go	5.5563	mm.
Thickness of Hub at Large End	g1	21.4312	mm.
Length of Hub	h	71.3740	mm.
Flange Material		SA-182 F316L	
Flange Material UNS number		S31603	
Flange Allowable Stress At Temperature	Sfo	77.70	N./mm²
Flange Allowable Stress At Ambient	Sfa	115.10	N./mm²
Bolt Material		SA-193 B7	
Bolt Allowable Stress At Temperature	Sb	172.38	N./mm²
Bolt Allowable Stress At Ambient	Sa	172.38	N./mm²
Diameter of Bolt Circle	C	361.950	mm.
Nominal Bolt Diameter	a	22.2250	mm.
Type of Threads		TEMA Thread Series	
Number of Bolts		12	
Flange Face Outside Diameter	Fod	323.850	mm.
Flange Face Inside Diameter	Fid	254.508	mm.
Flange Facing Sketch		1, Code Sketch 1a	
Gasket Outside Diameter	Go	317.500	mm.
Gasket Inside Diameter	Gi	287.274	mm.
Gasket Factor	m	3.0000	
Gasket Design Seating Stress	y	68.95	N./mm²
Column for Gasket Seating		2, Code Column II	
Gasket Thickness	tg	4.5000	mm.
Flange Class		150	
Flange Grade		GR 2.3	
Flange Series	Series	A	

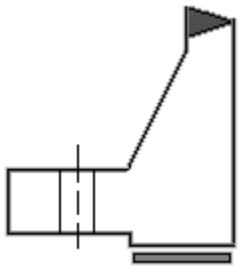

ASME Code, Section VIII Division 1, 2019

Hub Small End Required Thickness due to Internal Pressure:
```
= (P*(D/2+Ca))/(S*E-0.6*P) per UG-27 (c)(1)
= (4.0*(254.508/2+0.0))/(77.7*1.0-0.6*4.0)+Ca
= 0.6572 mm.
```

Hub Small End Hub MAWP:
```
= (S*E*t)/(R+0.6*t) per UG-27 (c)(1)
= (77.7 * 1.0 * 5.5563)/(127.254 + 0.6 * 5.5563 )
= 33.058 bars
```

```
Corroded Flange ID,      Bcor = B+2*Fcor              254.508  mm.
Corroded Large Hub,     g1Cor = g1-ci                  21.431  mm.
Corroded Small Hub,     g0Cor = go-ci                   5.556  mm.
Code R Dimension,           R = (C-B)/2 - g1           32.290  mm.

Gasket Contact Width,       N = (Go - Gi) / 2          15.113  mm.
Basic Gasket Width,        bo = N / 2                   7.557  mm.
Effective Gasket Width,     b = Cb sqrt(bo)             6.927  mm.
Gasket Reaction Diameter,   G = Go - 2 * b             303.646  mm.
```

<u>Basic Flange and Bolt Loads:</u>

Hydrostatic End Load due to Pressure [H]:
```
= 0.785 * G² * Peq
= 0.785 * 303.6459² * 4.0
= 28.965 kN
```
Contact Load on Gasket Surfaces [Hp]:
```
= 2 * b * Pi * G * m * P
= 2 * 6.927 * 3.1416 * 303.6459 * 3.0 * 4.0
= 15.859 kN
```
Hydrostatic End Load at Flange ID [Hd]:
```
= Pi * Bcor² * P  / 4
= 3.1416 * 254.508² *4.0/4
= 20.349 kN
```
Pressure Force on Flange Face [Ht]:
```
= H - Hd
= 29 - 20
= 8.616 kN
```
Operating Bolt Load [Wm1]:
```
= max( H + Hp + H'p, 0 )
```

```
  = max( 29 + 16 + 0, 0 )
  = 44.824 kN
```

Gasket Seating Bolt Load [Wm2]:

```
  = y * b * Pi * G  + yPart * bPart * lp
  = 68.95*6.927*3.141*303.646+0.0*0.0*0.0
  = 455.577 kN
```

Required Bolt Area [Am]:

```
  = Maximum of Wm1/Sb, Wm2/Sa
  = Maximum of 45/172, 456/172
  = 26.432 cm²
```

Min. Gasket Contact Width (Brownell Young) [Not an ASME Calc] [Nmin]:

```
  = Ab * Sa/( y * Pi * (Go + Gi) )
  = 32.439 * 172.38/(68.95 * 3.14 * (317.5 + 287.27) )
  = 4.268 mm.
```

Flange Design Bolt Load, Gasket Seating [W]:

```
  = Sa * ( Am + Ab ) / 2
  = 172.38 * ( 26.4317 + 32.4386 )/2
  = 507.35 kN
```

Gasket Load for the Operating Condition [HG]:

```
  = Wm1 - H
  = 45 - 29
  = 15.86 kN
```

Moment Arm Calculations:

Distance to Gasket Load Reaction [hg]:

```
  = (C - G ) / 2
  = ( 361.95 - 303.6459 )/2
  = 29.1520 mm.
```

Distance to Face Pressure Reaction [ht]:

```
  = ( R + g1 + hg ) / 2
  = ( 32.2898 + 21.4312 + 29.152 )/2
  = 41.4365 mm.
```

Distance to End Pressure Reaction [hd]:

```
  = R + ( g1 / 2 )
  = 32.2898 + ( 21.4312/2.0 )
  = 43.0054 mm.
```

Summary of Moments for Internal Pressure: (N-m)

Loading		Force	Distance	Bolt Corr	Moment
End Pressure,	Md	20.	43.0054	1.1200	981.
Face Pressure,	Mt	9.	41.4365	1.1200	400.
Gasket Load,	Mg	16.	29.1520	1.1200	518.
Gasket Seating,	Matm	507.	29.1520	1.1200	16572.

```
Total Moment for Operation,      Mop                                  1899. N-m
Total Moment for Gasket seating, Matm                                16572. N-m
```

You chose not to perform Stress Calculations on this Standard Flange.
The pressure rating of the flange will be used to check code compliance.

```
Estimated Finished Weight of Flange at given Thk.        25.6 kg.
Estimated Unfinished Weight of Forging at given Thk      64.3 kg.
```

Note:
The flange pressure ratio is less than 0.35. Impact testing is not required due to low stress per UHA-51(g).

Design Pressure/Ambient Rating = 4.00/15.90 = 0.252

PV Elite is a trademark of Intergraph CADWorx & Analysis Solutions, Inc. 2020

Flange Input Data Values **Description: New Flange :**

Reflux Cond. Connection

Description of Flange Geometry (Type)		Integral Weld Neck	
Design Pressure	P	4.00	bars
Design Temperature		234	°C
Internal Corrosion Allowance	ci	0.0000	mm.
External Corrosion Allowance	ce	0.0000	mm.
Use Corrosion Allowance in Thickness Calcs.		Yes	
Flange Inside Diameter	B	254.508	mm.
Flange Outside Diameter	A	406.400	mm.
Flange Thickness	t	30.2260	mm.
Thickness of Hub at Small End	go	5.5563	mm.
Thickness of Hub at Large End	g1	21.4312	mm.
Length of Hub	h	71.3740	mm.
Flange Material		SA-312 TP316L	
Flange Material UNS number		S31603	
Flange Allowable Stress At Temperature	Sfo	77.74	N./mm²
Flange Allowable Stress At Ambient	Sfa	115.15	N./mm²
Bolt Material		SA-193 B7	
Bolt Allowable Stress At Temperature	Sb	172.38	N./mm²
Bolt Allowable Stress At Ambient	Sa	172.38	N./mm²
Diameter of Bolt Circle	C	361.950	mm.
Nominal Bolt Diameter	a	22.2250	mm.
Type of Threads		TEMA Thread Series	
Number of Bolts		12	
Flange Face Outside Diameter	Fod	323.850	mm.
Flange Face Inside Diameter	Fid	254.508	mm.
Flange Facing Sketch		1, Code Sketch 1a	
Gasket Outside Diameter	Go	317.500	mm.
Gasket Inside Diameter	Gi	287.274	mm.
Gasket Factor	m	3.0000	
Gasket Design Seating Stress	y	68.95	N./mm²
Column for Gasket Seating		2, Code Column II	
Gasket Thickness	tg	4.5000	mm.
Flange Class		150	
Flange Grade		GR 2.3	
Flange Series	Series	A	

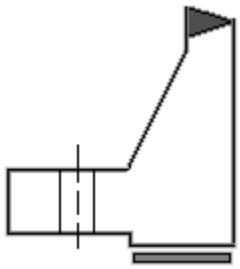

ASME Code, Section VIII Division 1, 2019

Hub Small End Required Thickness due to Internal Pressure:
```
= (P*(D/2+Ca))/(S*E-0.6*P) per UG-27 (c)(1)
= (4.0*(254.508/2+0.0))/(77.74*1.0-0.6*4.0)+Ca
= 0.6568 mm.
```

Hub Small End Hub MAWP:
```
= (S*E*t)/(R+0.6*t) per UG-27 (c)(1)
= (77.74 * 1.0 * 5.5563)/(127.254 + 0.6 * 5.5563 )
= 33.074 bars
```

```
Corroded Flange ID,      Bcor = B+2*Fcor                254.508  mm.
Corroded Large Hub,     g1Cor = g1-ci                    21.431  mm.
Corroded Small Hub,     g0Cor = go-ci                     5.556  mm.
Code R Dimension,           R = (C-B)/2 - g1             32.290  mm.

Gasket Contact Width,       N = (Go - Gi) / 2            15.113  mm.
Basic Gasket Width,        bo = N / 2                     7.557  mm.
Effective Gasket Width,     b = Cb sqrt(bo)               6.927  mm.
Gasket Reaction Diameter,   G = Go - 2 * b               303.646  mm.
```

<u>Basic Flange and Bolt Loads:</u>

Hydrostatic End Load due to Pressure [H]:
```
= 0.785 * G² * Peq
= 0.785 * 303.6459² * 4.0
= 28.965 kN
```
Contact Load on Gasket Surfaces [Hp]:
```
= 2 * b * Pi * G * m * P
= 2 * 6.927 * 3.1416 * 303.6459 * 3.0 * 4.0
= 15.859 kN
```
Hydrostatic End Load at Flange ID [Hd]:
```
= Pi * Bcor² * P  / 4
= 3.1416 * 254.508² *4.0/4
= 20.349 kN
```
Pressure Force on Flange Face [Ht]:
```
= H - Hd
= 29 - 20
= 8.616 kN
```
Operating Bolt Load [Wm1]:
```
= max( H + Hp + H'p, 0 )
```

```
  = max( 29 + 16 + 0, 0 )
  = 44.824 kN
```

Gasket Seating Bolt Load [Wm2]:

```
  = y * b * Pi * G  + yPart * bPart * lp
  = 68.95*6.927*3.141*303.646+0.0*0.0*0.0
  = 455.577 kN
```

Required Bolt Area [Am]:

```
  = Maximum of Wm1/Sb, Wm2/Sa
  = Maximum of 45/172, 456/172
  = 26.432 cm²
```

Min. Gasket Contact Width (Brownell Young) [Not an ASME Calc] [Nmin]:

```
  = Ab * Sa/( y * Pi * (Go + Gi) )
  = 32.439 * 172.38/(68.95 * 3.14 * (317.5 + 287.27) )
  = 4.268 mm.
```

Flange Design Bolt Load, Gasket Seating [W]:

```
  = Sa * ( Am + Ab ) / 2
  = 172.38 * ( 26.4317 + 32.4386 )/2
  = 507.35 kN
```

Gasket Load for the Operating Condition [HG]:

```
  = Wm1 - H
  = 45 - 29
  = 15.86 kN
```

Moment Arm Calculations:

Distance to Gasket Load Reaction [hg]:

```
  = (C - G ) / 2
  = ( 361.95 - 303.6459 )/2
  = 29.1520 mm.
```

Distance to Face Pressure Reaction [ht]:

```
  = ( R + g1 + hg ) / 2
  = ( 32.2898 + 21.4312 + 29.152 )/2
  = 41.4365 mm.
```

Distance to End Pressure Reaction [hd]:

```
  = R + ( g1 / 2 )
  = 32.2898 + ( 21.4312/2.0 )
  = 43.0054 mm.
```

Summary of Moments for Internal Pressure: (N-m)

Loading		Force	Distance	Bolt Corr	Moment
End Pressure,	Md	20.	43.0054	1.1200	981.
Face Pressure,	Mt	9.	41.4365	1.1200	400.
Gasket Load,	Mg	16.	29.1520	1.1200	518.
Gasket Seating,	Matm	507.	29.1520	1.1200	16572.

```
Total Moment for Operation,      Mop                                  1899. N-m
Total Moment for Gasket seating, Matm                                16572. N-m
```

You chose not to perform Stress Calculations on this Standard Flange.
The pressure rating of the flange will be used to check code compliance.

```
Estimated Finished Weight of Flange at given Thk.        25.6 kg.
Estimated Unfinished Weight of Forging at given Thk      64.3 kg.
```

Note:
The flange pressure ratio is less than 0.35. Impact testing is not required due to low stress per UHA-51(g).

Design Pressure/Ambient Rating = 4.00/15.90 = 0.252

PV Elite is a trademark of Intergraph CADWorx & Analysis Solutions, Inc. 2020

Element Thickness, Pressure, Diameter and Allowable Stress :

From	To	Int. Press + Liq. Hd bars	Nominal Thickness mm.	Total Corr Allowance mm.	Element Diameter mm.	Allowable Stress(SE) N./mm²
Reboiler Connect		4.0982	...	...	254.51	77.7
20	30	4.0882	9.271	...	273.05	77.739
30	40	4	...	...	254.51	77.7
40	50	4	...	...	254.51	77.7
50	60	4	9.271	...	273.05	77.739
Reflux Cond. Con		4	...	...	254.51	77.739

Element Required Thickness and MAWP :

From	To	Design Pressure bars	M.A.W.P. Corroded bars	M.A.P. New & Cold bars	Minimum Thickness mm.	Required Thickness mm.
Reboiler Connect		4	10.6259	15.9001	30.226	No Calc
20	30	4	47.225	70.08	8.11212	1.5
30	40	4	10.7241	15.9001	30.226	No Calc
40	50	4	10.7241	15.9001	30.226	No Calc
50	60	4	47.3132	70.08	8.11212	1.5
Reflux Cond. Con		4	10.7241	15.9001	30.226	No Calc
Minimum			11	16		

MAWP: 11 bars, limited by: Reboiler Connection.

Elements Suitable for Design Internal Pressure.

<u>Internal Pressure Calculation Results:</u>

ASME Code, Section VIII Division 1, 2019

<u>Cylindrical Shell From 20 To 30 SA-312 TP316L at 234 °C</u>
Material UNS Number: S31603

Required Thickness due to Internal Pressure [tr]:

```
= (P*Ro) / (S*E+0.4*P) per Appendix 1-1 (a)(1)
= (4.088*136.525)/(77.74*1.0+0.4*4.088)
= 0.7165 + 0.0000 = 0.7165 mm.
```

Note: The thickness required was less than the Code Minimum, therefore the Code Minimum value of 1.5000 mm. per UG-16 will be used.

Max. Allowable Working Pressure at given Thickness, corroded [MAWP]:
Less Operating Hydrostatic Head Pressure of 0.088 bars

```
= (S*E*t)/(Ro-0.4*t) per Appendix 1-1 (a)(1)
= (77.74*1.0*8.1121)/(136.525-0.4*8.1121)
= 47 - 0.1 = 47  bars
```

Maximum Allowable Pressure, New and Cold [MAPNC]:
```
= (S*E*t)/(Ro-0.4*t) per Appendix 1-1 (a)(1)
= (115.15*1.0*8.1121)/(136.525-0.4*8.1121)
= 70 bars
```

Actual stress at given pressure and thickness, corroded [Sact]:
```
= (P*(Ro-0.4*t))/(E*t)
= (4.088*((136.525-0.4*8.1121))/(1.0*8.1121)
= 6.717 N./mm²
```

SA-312 TP316L, Min Metal Temp without impact per UHA-51: -196 °C

Cylindrical Shell From 50 To 60 SA-312 TP316L at 234 °C

Material UNS Number: S31603

Required Thickness due to Internal Pressure [tr]:
```
= (P*Ro) / (S*E+0.4*P) per Appendix 1-1 (a)(1)
= (4.0*136.525)/(77.74*1.0+0.4*4.0)
= 0.7011 + 0.0000 = 0.7011 mm.
```

Note: The thickness required was less than the Code Minimum, therefore the Code Minimum value of 1.5000 mm. per UG-16 will be used.

Max. Allowable Working Pressure at given Thickness, corroded [MAWP]:
```
= (S*E*t)/(Ro-0.4*t) per Appendix 1-1 (a)(1)
= (77.74*1.0*8.1121)/(136.525-0.4*8.1121)
= 47 bars
```

Maximum Allowable Pressure, New and Cold [MAPNC]:
```
= (S*E*t)/(Ro-0.4*t) per Appendix 1-1 (a)(1)
= (115.15*1.0*8.1121)/(136.525-0.4*8.1121)
= 70 bars
```

Actual stress at given pressure and thickness, corroded [Sact]:
```
= (P*(Ro-0.4*t))/(E*t)
= (4.0*((136.525-0.4*8.1121))/(1.0*8.1121)
= 6.572 N./mm²
```

SA-312 TP316L, Min Metal Temp without impact per UHA-51: -196 °C

Hydrostatic Test Pressure Results:

```
Pressure per UG99b     = 1.30 * M.A.W.P. * Sa/S          13.814  bars
Pressure per UG99b[36] = 1.30 * Design Pres * Sa/S        5.200  bars
Pressure per UG99c     = 1.30 * M.A.P. - Head(Hyd)       20.660  bars
Pressure per UG100     = 1.10 * M.A.W.P. * Sa/S          11.688  bars
Pressure per PED       = max(1.43*DP, 1.25*DP*ratio)      5.720  bars
Pressure per App 27-4  = M.A.W.P.                        10.626  bars
```

UG-99(b) Note 36, Test Pressure Calculation:
```
= Test Factor * Design Pressure * Stress Ratio
= 1.3 * 4.0 * 1.0
= 5.200 bars
```

Vertical Test performed per: UG-99b (Note 36)

Please note that Nozzle, Shell, Head, Flange, etc MAWPs are all considered when determining the hydrotest pressure for those test types that are based on the MAWP of the vessel.

Stresses on Elements due to Test Pressure (N./mm² & bars):

From	To	Stress	Allowable	Ratio	Pressure
20	30	8.9	155.1	0.058	5.44
50	60	8.8	155.1	0.056	5.33

Stress ratios for Nozzle and Pad Materials (N./mm²):

Description	Pad/Nozzle	Ambient	Operating	Ratio
N03 (2in)	Nozzle	115.15	77.74	1.481
N05B (8in)	Nozzle	115.10	77.70	1.481
N05B (8in)	Pad	137.90	137.90	1.000
N05A (8in)	Nozzle	115.15	77.74	1.481
N05A (8in)	Pad	137.90	137.90	1.000
K1A (2in)	Nozzle	115.15	77.74	1.481
Minimum				1.000

Stress ratios for Pressurized Vessel Elements (N./mm²):

Description	Ambient	Operating	Ratio
Reboiler Connection	115.10	77.70	1.481
	115.15	77.74	1.481
	115.10	77.70	1.481
	115.10	77.70	1.481
	115.15	77.74	1.481
Reflux Cond. Connect	115.15	77.74	1.481
Minimum			1.481

Hoop Stress in Nozzle Wall during Pressure Test (N./mm²):

Description	Ambient	Operating	Ratio
N03 (2in)	1.18	155.14	0.008
N05B (8in)	8.07	155.10	0.052
N05A (8in)	7.91	155.14	0.051
K1A (2in)	1.11	155.14	0.007

Elements Suitable for Test Pressure.

PV Elite is a trademark of Intergraph CADWorx & Analysis Solutions, Inc. 2020

External Pressure Calculation Results :

External Pressure Calculations:

From	To	Section Length mm.	Outside Diameter mm.	Corroded Thickness mm.	Factor A	Factor B N./mm²
10	20	No Calc	...	30.226	No Calc	No Calc
20	30	900	273.05	8.11212	0.0018986	65.0075
30	40	No Calc	...	30.226	No Calc	No Calc
40	50	No Calc	...	30.226	No Calc	No Calc
50	60	1200	273.05	8.11212	0.0013835	61.0888
60	70	No Calc	...	30.226	No Calc	No Calc

External Pressure Calculations:

From	To	External Actual T. mm.	External Required T. mm.	External Design Pressure bars	External M.A.W.P. bars
10	20	30.226	No Calc	1.034	No Calc
20	30	8.11212	1.47578	1.034	25.7495
30	40	30.226	No Calc	1.034	No Calc
40	50	30.226	No Calc	1.034	No Calc
50	60	8.11212	1.67077	1.034	24.1973
60	70	30.226	No Calc	1.034	No Calc
Minimum					24

External Pressure Calculations:

From	To	Actual Length Bet. Stiffeners mm.	Allowable Length Bet. Stiffeners mm.	Ring Inertia Required cm**4	Ring Inertia Available cm**4
10	20	No Calc	No Calc	No Calc	No Calc
20	30	900	21000	No Calc	No Calc
30	40	No Calc	No Calc	No Calc	No Calc
40	50	No Calc	No Calc	No Calc	No Calc
50	60	1200	27129.5	No Calc	No Calc
60	70	No Calc	No Calc	No Calc	No Calc

Elements Suitable for External Pressure.

ASME Code, Section VIII Division 1, 2019

<u>Cylindrical Shell From 20 to 30 Ext. Chart: HA-4 at 100 °C</u>

Elastic Modulus from Chart: HA-4 at 100 °C: 186872176.000 KPa.

```
                                                |                                |
Results for Maximum Allowable Ext. Pressure     |                           MAEP |
-----------------------------------------------------------------------------------
    Tca |  Outer Dia |        Slen |      Do/t |       L/D |   Factor A | Factor B |
  8.112 |     273.05 |      900.00 |     33.66 |    3.2961 |  0.0018986 |    65.01 |
-----------------------------------------------------------------------------------
MAEP = (4*B)/(3*(Do/t)) = (4*65.0075)/(3*33.6595) = 25.7495 bars

                                                |                                |
Results for Required Thickness                  |                            Tca |
-----------------------------------------------------------------------------------
    Tca |  Outer Dia |        Slen |      Do/t |       L/D |   Factor A | Factor B |
  1.476 |     273.05 |      900.00 |    185.02 |    3.2961 |  0.0001536 |    14.35 |
-----------------------------------------------------------------------------------
MAEP = (4*B)/(3*(Do/t)) = (4*14.3499)/(3*185.0207) = 1.034 bars

                                                |                                |
Results for Maximum Stiffened Length            |                           Slen |
-----------------------------------------------------------------------------------
    Tca |  Outer Dia |        Slen |      Do/t |       L/D |   Factor A | Factor B |
  8.112 |     273.05 |    21000.00 |     33.66 |   50.0000 |  0.0009977 |    56.93 |
-----------------------------------------------------------------------------------
MAEP = (4*B)/(3*(Do/t)) = (4*56.932)/(3*33.6595) = 22.5508 bars

-----------------------------------------------------------------------------------------------
```

Cylindrical Shell From 50 to 60 Ext. Chart: HA-4 at 100 °C

Elastic Modulus from Chart: HA-4 at 100 °C: 186872176.000 KPa.

```
                                                |                                |
Results for Maximum Allowable Ext. Pressure     |                           MAEP |
-----------------------------------------------------------------------------------
    Tca |  Outer Dia |        Slen |      Do/t |       L/D |   Factor A | Factor B |
  8.112 |     273.05 |     1200.00 |     33.66 |    4.3948 |  0.0013835 |    61.09 |
-----------------------------------------------------------------------------------
MAEP = (4*B)/(3*(Do/t)) = (4*61.0888)/(3*33.6595) = 24.1973 bars

                                                |                                |
Results for Required Thickness                  |                            Tca |
-----------------------------------------------------------------------------------
    Tca |  Outer Dia |        Slen |      Do/t |       L/D |   Factor A | Factor B |
  1.671 |     273.05 |     1200.00 |    163.43 |    4.3948 |  0.0001356 |    12.68 |
-----------------------------------------------------------------------------------
MAEP = (4*B)/(3*(Do/t)) = (4*12.6751)/(3*163.4272) = 1.034 bars

                                                |                                |
Results for Maximum Stiffened Length            |                           Slen |
-----------------------------------------------------------------------------------
    Tca |  Outer Dia |        Slen |      Do/t |       L/D |   Factor A | Factor B |
  8.112 |     273.05 |    27129.53 |     33.66 |   50.0000 |  0.0009977 |    56.93 |
-----------------------------------------------------------------------------------
MAEP = (4*B)/(3*(Do/t)) = (4*56.932)/(3*33.6595) = 22.5508 bars

-----------------------------------------------------------------------------------------------
```

PV Elite is a trademark of Intergraph CADWorx & Analysis Solutions, Inc. 2020

Element and Detail Weights:

From	To	Element Metal Wgt. kg.	ID	Element Volume Cm.	Corroded Metal Wgt. kg.	Corroded ID Volume Cm.	Extra due Misc % kg.
10	20	25.6393		5169.69	25.6393	5169.69	2.56393
20	30	55.9923		46632.4	55.9923	46632.4	5.59923
30	40	25.6393		5169.69	25.6393	5169.69	2.56393
40	50	25.6393		5169.69	25.6393	5169.69	2.56393
50	60	74.6563		62176.5	74.6563	62176.5	7.46563
60	70	25.6393		5169.69	25.6393	5169.69	2.56393
Total		233		129487.57	233	129487.57	23

Weight of Details:

From	Type	Weight of Detail kg.	X Offset, Dtl. Cent. mm.	Y Offset, Dtl. Cent. mm.	Description
10	Liqd	5.16653	...	50.8	Liquid: 10
10	Insl	1.14807	...	50.8	Ins: 10
20	Pack	16.8369	...	375	Pack: [1 of 1]
20	Liqd	46.6039	...	450	Liquid: 20
20	Insl	7.06277	...	450	Ins: 20
20	Nozl	8.22666	153.813	800	N03 (2in)
20	Nozl	55.5954	230.794	200	N05B (8in)
20	Wght	50	...	50	SUPPORT GRID 1
20	Wght	25	...	700	BED LIMMITER
20	Wght	50	...	800	N03 INLET
30	Insl	1.14807	...	50.8	Ins: 30
40	Insl	1.14807	...	50.8	Ins: 40
50	Pack	27.1981	...	575	Pack: [1 of 1]
50	Insl	9.41702	...	600	Ins: 50
50	Nozl	55.5954	230.794	200	N05A (8in)
50	Nozl	9.82743	153.813	1100	K1A (2in)
50	Wght	50	...	50	SUPPORT GRID 2
50	Wght	25	...	1100	BED LIMMETER
60	Insl	1.14807	...	50.8	Ins: 60
60	Wght	350	...	101	E-100 WEIGHT
60	Wght	50	660	101	PIPING
20	Pliq	10.10	...	375.000	
50	Pliq	16.31	...	575.000	

Total Weight of Each Detail Type:

Packing	44.0
Packing Liquid	26.4
Liquid	51.8
Insulation	21.1
Nozzles	129.2
Weights	600.0
Sum of the Detail Weights	872.5 kg.

Weight Summation Results: (kg.)

	Fabricated	Shop Test	Shipping	Erected	Empty	Operating
Main Elements	256.5	256.5	256.5	256.5	256.5	256.5
Nozzles	129.2	129.2	129.2	129.2	129.2	129.2
Wld Weights	50.0	50.0	50.0	50.0	50.0	50.0
Packing	...	...	...	...	44.0	44.0 *
Insulation	...	...	...	...	21.1	21.1 *
Empty Weights	...	...	...	150.0	150.0	...
Ope Weights	...	...	...	...	...	550.0
Ope. Liquid	...	...	...	...	...	51.8
Packing Liq	...	...	...	...	...	26.4
Test Liquid	...	129.4	...	...	...	...
Totals	435.8	565.2	435.8	585.8	650.9	1129.1

Field Installation Options:
* Packing installed after lifting.
* Insulation installed after lifting.

Miscellaneous Weight Percent: 10.0 %

Note that the above value for the miscellaneous weight percent has been applied to the shells/heads/flange/tubesheets/tubes etc. in the weight calculations for metallic components.

Weight Summary:

Fabricated Wt.	- Bare Weight without Removable Internals	435.8 kg.
Shop Test Wt.	- Fabricated Weight + Water (Full)	565.2 kg.
Shipping Wt.	- Fab. Weight + removable Intls.+ Shipping App.	435.8 kg.
Erected Wt.	- Fab. Wt + or - loose items (trays,platforms etc.)	585.8 kg.
Ope. Wt. no Liq	- Fab. Weight + Internals. + Details + Weights	650.9 kg.
Operating Wt.	- Empty Weight + Operating Liq. Uncorroded	1129.1 kg.
Field Test Wt.	- Empty Weight + Water (Full)	586.3 kg.
Mass of the Upper 1/3 of the Vertical Vessel		547.2 kg.

Note: The Field Test weight as computed in the corroded condition.

Outside Surface Areas of Elements:

From	To	Surface Area cm²
10	20	1841.13
20	30	7785.84
30	40	1841.13
40	50	1841.13
50	60	10381.1
60	70	1841.13
Total		25531.488 cm²

Element and Detail Weights:

From	To	Total Ele. Empty Wgt. kg.	Total. Ele. Oper. Wgt. kg.	Total. Ele. Hydro. Wgt. kg.	Total Dtl. Offset Mom. N-m	Oper. Wgt. No Liquid kg.
10	20	28.2032	34.5178	34.5178	...	29.3513
20	30	250.414	331.015	229.08	138.286	274.313
30	40	28.2032	29.3513	34.5178	...	29.3513
40	50	28.2032	29.3513	34.5178	...	29.3513
50	60	222.545	275.471	219.1	140.701	259.16
60	70	28.2032	429.351	34.5178	323.729	429.351

Cumulative Vessel Weight

From	To	Cumulative Ope Wgt. No Liquid kg.	Cumulative Oper. Wgt. kg.	Cumulative Hydro. Wgt. kg.
10	20	1050.88	1129.06	586.252
20	30	1021.53	1094.54	551.734
30	40	747.214	763.525	322.654
40	50	717.862	734.174	288.136
50	60	688.511	704.823	253.618
60	70	429.351	429.351	34.5178

Note: The cumulative operating weights no liquid in the column above are the cumulative operating weights minus the operating liquid weight minus any weights absent in the empty condition.

Cumulative Vessel Moment

From	To	Cumulative Empty Mom. N-m	Cumulative Oper. Mom. N-m	Cumulative Hydro. Mom. N-m
10	20	602.716	602.716	602.716
20	30	602.716	602.716	602.716
30	40	464.43	464.43	464.43
40	50	464.43	464.43	464.43
50	60	464.43	464.43	464.43
60	70	323.729	323.729	323.729

PV Elite is a trademark of Intergraph CADWorx & Analysis Solutions, Inc. 2020

Nozzle Flange MAWP Results: (bars & °C)

Nozzle Description	Flange Rating Ope.	Flange Rating Ambient	Design Temp	Class	Grade/ Group	Equiv. Press	UG-44(b)	Max Pressure 50%	Max Pressure DNV
N03 (2in)	12.61	19.00	234	150	GR 2.2	...	...	...	...
N05B (8in)	10.72	15.90	234	150	GR 2.3	...	...	...	...
N05A (8in)	10.72	15.90	234	150	GR 2.3	...	...	...	...
K1A (2in)	34.14	49.60	234	300	GR 2.2	...	...	...	...
Min Rating	10.724	15.900 bars [for Core Elements]					0.000	0.000	0.000

ANSI Ratings are per ANSI/ASME B16.5 2013 Metric Edition

Warning:
There are nozzles in this model, but no flange MAWPs were de-rated. Be sure this is what you intended. There is a check box in the nozzle dialog that instructs PV Elite to perform the de-rating for each nozzle flange. See ASME VIII-1, UG-44(b) for more information.

PV Elite is a trademark of Intergraph CADWorx & Analysis Solutions, Inc. 2020

Shop/Field Installation Options :

Packing is installed in the Field after being lifted.
Insulation is installed in the Field after being lifted.

Note : The CG is computed from the first Element From Node

```
Center of Gravity of the Packing                          1295.894 mm.
Center of Gravity of the Liquid                            508.531 mm.
Center of Gravity of the Insulation                       1261.494 mm.
Center of Gravity of the Nozzles                           979.824 mm.
Center of Gravity of the Added Weights (Operating)        2008.565 mm.
Center of Gravity of the Added Weights (Empty)             977.044 mm.

Center of Gravity of Bare Shell New and Cold              1241.883 mm.
Center of Gravity of Bare Shell Corroded                  1241.883 mm.

Vessel CG in the Operating Condition                      1596.452 mm.
Vessel CG in the Fabricated (Shop/Empty) Condition        1093.638 mm.
```

PV Elite is a trademark of Intergraph CADWorx & Analysis Solutions, Inc. 2020

Input, Nozzle Desc: N03 (2in) **From: 20**

Pressure for Reinforcement Calculations	P	4.010	bars
Temperature for Internal Pressure	Temp	234	°C
Design External Pressure	Pext	1.03	bars
Temperature for External Pressure	Tempex	100	°C
Shell Material		SA-312 TP316L	
Shell Allowable Stress at Temperature	Sv	77.74	N./mm²
Shell Allowable Stress At Ambient	Sva	115.15	N./mm²
Inside Diameter of Cylindrical Shell	D	254.51	mm.
Design Length of Section	L	900.0000	mm.
Shell Finished (Minimum) Thickness	t	8.1121	mm.
Shell Internal Corrosion Allowance	c	0.0000	mm.
Shell External Corrosion Allowance	co	0.0000	mm.
Distance from Bottom/Left Tangent		909.27	mm.
User Entered Minimum Design Metal Temperature		5.00	°C

Type of Element Connected to the Shell : Nozzle

Material		SA-182 F316L	
Material UNS Number		S31603	
Material Specification/Type		Forgings	
Allowable Stress at Temperature	Sn	77.74	N./mm²
Allowable Stress At Ambient	Sna	115.15	N./mm²
Diameter Basis (for tr calc only)		ID	
Layout Angle		0.00	deg
Diameter		2.0000	in.
Size and Thickness Basis		Actual	
Actual Thickness	tn	15.8500	mm.
Flange Material		SA-312 TP316	
Flange Type		Long Weld Neck	
Corrosion Allowance	can	0.0000	mm.
Joint Efficiency of Shell Seam at Nozzle	E1	1.00	
Joint Efficiency of Nozzle Neck	En	1.00	
Outside Projection	ho	150.0000	mm.
Weld leg size between Nozzle and Pad/Shell	Wo	10.0000	mm.
Groove weld depth between Nozzle and Vessel	Wgnv	3.6671	mm.
Inside Projection	h	0.0000	mm.
Weld leg size, Inside Element to Shell	Wi	0.0000	mm.
Flange Class		150	
Flange Grade		GR 2.2	

The Pressure Design option was Design Pressure + static head.

Nozzle Sketch (may not represent actual weld type/configuration)

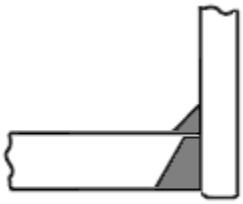

Insert/Set-in Nozzle No Pad, no Inside projection

Reinforcement CALCULATION, Description: N03 (2in)

ASME Code, Section VIII, Div. 1, 2019, UG-37 to UG-45

```
Actual Inside Diameter Used in Calculation              2.000  in.
Actual Thickness Used in Calculation                    0.624  in.
```

Nozzle input data check completed without errors.

Reqd thk per UG-37(a) of Cylindrical Shell, Tr [Int. Press]

```
  = (P*R)/(Sv*E-0.6*P) per UG-27 (c)(1)
  = (4.01*127.254)/(78*1.0-0.6*4.01)
  = 0.6585 mm.
```

Reqd thk per App. 1 of Nozzle Wall, Trn [Int. Press]

```
  = R( exp([P/(Sn*E)] - 1 ) per Appendix 1-2 (a)(1)
  = 25.4(exp([4.01/(77.74*1.0]-1)
  = 0.1314 mm.
```

Required Nozzle thickness under External Pressure per UG-28 : 0.3482 mm.

UG-40, Limits of Reinforcement : [Internal Pressure]

```
Parallel to Vessel Wall (Diameter Limit)            Dl    101.6000  mm.
Parallel to Vessel Wall, opening length              d     50.8000  mm.
Normal to Vessel Wall (Thickness Limit), no pad    Tlnp    20.2803  mm.
```

Weld Strength Reduction Factor [fr1]:

```
  = min( 1, Sn/Sv )
  = min( 1, 77.7/77.7 )
  = 1.000
```

Weld Strength Reduction Factor [fr2]:

```
  = min( 1, Sn/Sv )
  = min( 1, 77.7/77.7 )
  = 1.000
```

Weld Strength Reduction Factor [fr3]:

```
  = min( fr2, fr4 )
```

```
= min( 1.0, 1.0 )
= 1.000
```

Results of Nozzle Reinforcement Area Calculations: (cm²)

```
AREA AVAILABLE, A1 to A5      |    Design|  External|     Mapnc|
-------------------------------------------------------------
Area Required             Ar |     0.334|     0.375|        NA|
Area in Shell             A1 |     3.786|     3.371|        NA|
Area in Nozzle Wall       A2 |     6.376|     6.288|        NA|
Area in Inward Nozzle     A3 |     0.000|     0.000|        NA|
Area in Welds    A41+A42+A43 |     0.998|     0.998|        NA|
Area in Element           A5 |     0.000|     0.000|        NA|
TOTAL AREA AVAILABLE    Atot |    11.160|    10.657|        NA|
```

The External Pressure Case Governs the Analysis.

```
Nozzle Angle Used in Area Calculations                90.00  Degs.
```

The area available without a pad is Sufficient.

Area Required [A]:

```
= 0.5( d * tr*F + 2 * tn * tr*F(1-fr1) ) per UG-37(d)
= 0.5(50.8*1.4758*1+2*15.85*1.4758*1(1-1.0))
= 0.375 cm²
```

Reinforcement Areas per Figure UG-37.1

Area Available in Shell [A1]:

```
= d( E1*t - F*tr ) - 2 * tn( E1*t - F*tr ) * ( 1 - fr1 )
= 50.8( 1.0 * 8.1121 - 1.0 * 1.476 ) - 2 * 15.85
  ( 1.0 * 8.1121 - 1.0 * 1.4758 ) * ( 1 - 1.0 )
= 3.371 cm²
```

Area Available in Nozzle Projecting Outward [A2]:

```
= ( 2 * tlnp )( tn - trn )fr2
= ( 2 * 20.28 )( 15.85 - 0.35 )1.0
= 6.288 cm²
```

Area Available in Inward Weld + Outward Weld [A41 + A43]:

```
= ( Wo² - Area Lost )*fr2 + ( (Wi-can/0.707)² - Area Lost)*fr2
= ( 10.0² - 0.002 ) * 1.0 + ( 0.0² -0.0 ) * 1.0
= 0.998 cm²
```

UG-45 Minimum Nozzle Neck Thickness Requirement: [Int. Press.]

```
Wall Thickness for Internal/External pressures      ta = 0.3482 mm.
Wall Thickness per UG16(b),                      tr16b = 1.5000 mm.
Wall Thickness, shell/head, internal pressure     trb1 = 0.6585 mm.
Wall Thickness                  tb1 = max(trb1, tr16b) = 1.5000 mm.
Wall Thickness                  tb2 = max(trb2, tr16b) = 1.5000 mm.
Wall Thickness per table UG-45                     tb3 = 4.8000 mm.
```

Determine Nozzle Thickness candidate [tb]:

```
= min[ tb3, max( tb1,tb2) ]
```

```
  = min[ 4.8, max( 1.5, 1.5 ) ]
  = 1.5000 mm.
```

Minimum Wall Thickness of Nozzle Necks [tUG-45]:

```
  = max( ta, tb )
  = max( 0.3482, 1.5 )
  = 1.5000 mm.
```

Available Nozzle Neck Thickness = 15.8500 mm. --> OK

Stresses on Nozzle due to External and Pressure Loads per the ASME B31.3 Piping Code (see 319.4.4 and 302.3.5):

```
 Sustained  :     10.7,  Allowable :     77.7 N./mm²  Passed
 Expansion  :      0.0,  Allowable :    230.4 N./mm²  Passed
 Occasional :      0.2,  Allowable :    103.4 N./mm²  Passed
 Shear      :      2.8,  Allowable :     54.4 N./mm²  Passed
```

Note : The number of cycles on this nozzle was assumed to be 7000 or less for the determination of the expansion stress allowable.

SA-312 TP316L, Min Metal Temp without impact per UHA-51: -196 °C

SA-182 F316L, Min Metal Temp without impact per UHA-51: -196 °C

Note:
The flange pressure ratio is less than 0.35. Impact testing is not required due to low stress per UHA-51(g).

Design Pressure/Ambient Rating = 4.01/19.00 = 0.211

Weld Size Calculations, Description: N03 (2in)

```
 Intermediate Calc. for nozzle/shell Welds   Tmin      9.2710  mm.
```

Results Per UW-16.1:

```
                        Required Thickness    Actual Thickness
 Nozzle Weld          6.0000 = Min per Code 7.0700 = 0.7 * Wo mm.
```

Weld Strength and Weld Loads per UG-41.1, Sketch (a) or (b)

Weld Load [W]:

```
  = max( 0, (A-A1+2*tn*fr1*(E1*t-tr))Sv)
  = max( 0, ( 0.3748 - 3.3713 + 2 * 15.85 * 1.0 *
    (1.0 * 8.1121 - 1.4758 ) )78)
  = max( 0, -6.94) kN
```

Note: F is always set to 1.0 throughout the calculation.

Weld Load [W1]:

```
  = (A2+A5+A4-(Wi-Can/.707)²*fr2)*Sv
  = ( 6.2876 + 0.0 + 0.998 - 0.0 * 1.0 ) * 78
  = 56.63 kN
```

Weld Load [W2]:

```
  = (A2 + A3 + A4 + (2 * tn * t * fr1)) * Sv
  = ( 6.2876 + 0.0 + 0.998 + ( 2.5715 ) ) * 78
  = 76.62 kN
```

Weld Load [W3]:

```
  = (A2+A3+A4+A5+(2*tn*t*fr1))*S
  = ( 6.2876 + 0.0 + 0.998 + 0.0 + ( 2.5715 ) ) * 78
  = 76.62 kN
```

Strength of Connection Elements for Failure Path Analysis

Shear, Outward Nozzle Weld [Sonw]:

```
  = (pi/2) * Dlo * Wo * 0.49 * Snw
  = ( 3.1416/2.0 ) * 82.5 * 10.0 * 0.49 * 78
  = 49. kN
```

Shear, Nozzle Wall [Snw]:

```
  = (pi *( Dlr + Dlo )/4 ) * ( Thk - Can ) * 0.7 * Sn
  = (3.1416 * 33.325) * ( 15.85 - 0.0 ) * 0.7 * 78
  = 90. kN
```

Tension, Shell Groove Weld [Tngw]:

```
  = (pi/2) * Dlo * (Wgnvi-Cas) * 0.74 * Sng
  = ( 3.1416/2.0 ) * 82.5 * ( 3.6671 - 0.0 ) * 0.74 * 78
  = 27. kN
```

Strength of Failure Paths:

```
  PATH11 = ( SONW + SNW ) = ( 49 + 90 ) = 140 kN
  PATH22 = ( Sonw + Tpgw + Tngw + Sinw )
         = ( 49 + 0 + 27 + 0 ) = 77 kN
  PATH33 = ( Sonw + Tngw + Sinw )
         = ( 49 + 27 + 0 ) = 77 kN
```

Summary of Failure Path Calculations:

```
 Path 1-1 = 139 kN , must exceed W = 0 kN  or W1 = 56 kN
 Path 2-2 = 76 kN , must exceed W = 0 kN  or W2 = 76 kN
 Path 3-3 = 76 kN , must exceed W = 0 kN  or W3 = 76 kN
```

Maximum Allowable Pressure for this Nozzle at this Location:

```
 Converged Max. Allow. Pressure in Operating case   47  bars
```

Note: The MAWP of this junction was limited by the parent Shell/Head.

```
 Nozzle is O.K. for the External Pressure           1  bars
```

The Drop for this Nozzle is : 6.8712 mm.
The Cut Length for this Nozzle is, Drop + Ho + H + T : 164.9833 mm.

Input Echo, WRC107/537 Item 1, Description: N03 (2in) :

```
 Diameter Basis for Vessel                  Vbasis      ID
 Cylindrical or Spherical Vessel            Cylsph      Cylindrical
 Internal Corrosion Allowance                  Cas      0.0000  mm.
```

Vessel Diameter	Dv	254.508	mm.
Vessel Thickness	Tv	8.112	mm.
Design Temperature	T1	234.0	°C
Vessel Material		SA-312 TP316L	
Vessel UNS Number		S31603	
Vessel Cold S.I. Allowable	Smc	115.15	N./mm²
Vessel Hot S.I. Allowable	Smh	77.74	N./mm²

Note:
Using 3*S for Discontinuity Allowable (Div 2, 4.1.6.3) in Creep range.

Attachment Type	Type	Round	
Diameter Basis for Nozzle	Nbasis	ID	
Corrosion Allowance for Nozzle	Can	0.0000	mm.
Nozzle Diameter	Dn	50.800	mm.
Nozzle Thickness	Tn	15.850	mm.
Nozzle Material		SA-182 F316L	
Nozzle UNS Number		S31603	
Nozzle Cold S.I. Allowable	SNmc	115.15	N./mm²
Nozzle Hot S.I. Allowable	SNmh	77.74	N./mm²
Design Internal Pressure	Dp	4.010	bars
Include Pressure Thrust		No	

External Forces and Moments in WRC 107/537 Convention:

Radial Load	(SUS)	P	2.8	kN
Longitudinal Shear	(SUS)	Vl	2.8	kN
Circumferential Shear	(SUS)	Vc	-2.1	kN
Circumferential Moment	(SUS)	Mc	-280.0	N-m
Longitudinal Moment	(SUS)	Ml	-360.0	N-m
Torsional Moment	(SUS)	Mt	-420.0	N-m

Use Interactive Control		No	
WRC107 Version	Version	March	1979
Include Pressure Stress Indices per Div. 2		No	
Compute Pressure Stress per WRC-368		No	
Local Loads applied at end of Nozzle/Attachment		No	

Note:
WRC Bulletin 537 provides equations for the dimensionless curves found in bulletin 107. As noted in the foreword to bulletin 537, "537 is equivalent to WRC 107". Where 107 is printed in the results below, "537" can be interchanged with "107".

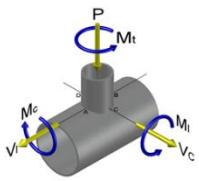

Stress Attenuation Diameter (for Insert Plates) per WRC 297:

```
  = NozzleOD + 2 * 1.65 * sqrt( Rmean( t - ca ) )
  = 82.5 + 2 * 1.65 * sqrt( 131.31 ( 8.112 - 0.0 ) )
  = 190.204 mm.
```

WRC 107 Stress Calculation for SUStained loads:

Radial Load	P	2.8	kN
Circumferential Shear	VC	-2.1	kN
Longitudinal Shear	VL	2.8	kN
Circumferential Moment	MC	-280.0	N-m
Longitudinal Moment	ML	-360.0	N-m
Torsional Moment	MT	-420.0	N-m

Dimensionless Parameters used : Gamma = 16.19

Dimensionless Loads for Cylindrical Shells at Attachment Junction:

Curves read for 1979	Beta	Figure	Value	Location
N(PHI) / (P/Rm)	0.275	4C	2.406	(A,B)
N(PHI) / (P/Rm)	0.275	3C	1.725	(C,D)
M(PHI) / (P)	0.275	2C1	0.040	(A,B)
M(PHI) / (P)	0.275	1C !	0.068	(C,D)
N(PHI) / (MC/(Rm**2 * Beta))	0.275	3A	0.683	(A,B,C,D)
M(PHI) / (MC/(Rm * Beta))	0.275	1A	0.084	(A,B,C,D)
N(PHI) / (ML/(Rm**2 * Beta))	0.275	3B	1.756	(A,B,C,D)
M(PHI) / (ML/(Rm * Beta))	0.275	1B	0.029	(A,B,C,D)
N(x) / (P/Rm)	0.275	3C	1.725	(A,B)
N(x) / (P/Rm)	0.275	4C	2.406	(C,D)
M(x) / (P)	0.275	1C1	0.069	(A,B)
M(x) / (P)	0.275	2C !	0.040	(C,D)
N(x) / (MC/(Rm**2 * Beta))	0.275	4A	1.260	(A,B,C,D)
M(x) / (MC/(Rm * Beta))	0.275	2A	0.042	(A,B,C,D)
N(x) / (ML/(Rm**2 * Beta))	0.275	4B	0.658	(A,B,C,D)
M(x) / (ML/(Rm * Beta))	0.275	2B	0.048	(A,B,C,D)

Note - The ! mark next to the figure name denotes curve value exceeded.

Stress Concentration Factors: Kn = 1.00, Kb = 1.00

Stresses in the Vessel at the Attachment Junction (N./mm²)

Type of Stress Load	Stress Intensity Values at Au	Al	Bu	Bl	Cu	Cl	Du	Dl
Circ. Memb. P	-6.3	-6.3	-6.3	-6.3	-4.5	-4.5	-4.5	-4.5
Circ. Bend. P	-10.2	10.2	-10.2	10.2	-17.4	17.4	-17.4	17.4
Circ. Memb. MC	0.0	0.0	0.0	0.0	5.0	5.0	-5.0	-5.0
Circ. Memb. MC	0.0	0.0	0.0	0.0	59.1	-59.1	-59.1	59.1
Circ. Memb. ML	16.4	16.4	-16.4	-16.4	0.0	0.0	0.0	0.0
Circ. Bend. ML	26.2	-26.2	-26.2	26.2	0.0	0.0	0.0	0.0
Tot. Circ. Str.	26.1	-5.9	-59.3	13.7	42.1	-41.2	-86.0	66.9
Long. Memb. P	-4.5	-4.5	-4.5	-4.5	-6.3	-6.3	-6.3	-6.3
Long. Bend. P	-17.6	17.6	-17.6	17.6	-10.2	10.2	-10.2	10.2
Long. Memb. MC	0.0	0.0	0.0	0.0	9.2	9.2	-9.2	-9.2
Long. Bend. MC	0.0	0.0	0.0	0.0	30.0	-30.0	-30.0	30.0
Long. Memb. ML	6.2	6.2	-6.2	-6.2	0.0	0.0	0.0	0.0
Long. Bend. ML	43.5	-43.5	-43.5	43.5	0.0	0.0	0.0	0.0
Tot. Long. Str.	27.5	-24.2	-71.8	50.4	22.6	-16.9	-55.7	24.7
Shear VC	-2.0	-2.0	2.0	2.0	0.0	0.0	0.0	0.0
Shear VL	0.0	0.0	0.0	0.0	-2.7	-2.7	2.7	2.7
Shear MT	-4.8	-4.8	-4.8	-4.8	-4.8	-4.8	-4.8	-4.8
Tot. Shear	-6.8	-6.8	-2.8	-2.8	-7.5	-7.5	-2.2	-2.2
Str. Int.	33.7	26.5	72.4	50.6	44.6	43.3	86.1	67.1

WRC 107/537 Stress Summations:

Vessel Stress Summation at Attachment Junction (N./mm²)

Type of Stress	Load	Stress Intensity Values at Au	Al	Bu	Bl	Cu	Cl	Du	Dl
Circ. Pm	(SUS)	6.1	6.5	6.1	6.5	6.1	6.5	6.1	6.5
Circ. Pl	(SUS)	10.1	10.1	-22.8	-22.8	0.4	0.4	-9.5	-9.5
Circ. Q	(SUS)	16.0	-16.0	-36.5	36.5	41.7	-41.7	-76.5	76.5
Long. Pm	(SUS)	3.0	3.0	3.0	3.0	3.0	3.0	3.0	3.0
Long. Pl	(SUS)	1.6	1.6	-10.7	-10.7	2.9	2.9	-15.5	-15.5
Long. Q	(SUS)	25.8	-25.8	-61.1	61.1	19.8	-19.8	-40.2	40.2
Shear Pm	(SUS)	0.0	0.0	0.0	0.0	0.0	0.0	0.0	0.0
Shear Pl	(SUS)	-2.0	-2.0	2.0	2.0	-2.7	-2.7	2.7	2.7
Shear Q	(SUS)	-4.8	-4.8	-4.8	-4.8	-4.8	-4.8	-4.8	-4.8
Pm	(SUS)	6.1	6.5	6.1	6.5	6.1	6.5	6.1	6.5
Pm+Pl	(SUS)	16.5	16.9	17.1	16.7	8.9	9.1	13.2	13.2
Pm+Pl+Q	(Total)	38.3	25.7	69.2	53.7	50.5	37.1	80.0	73.5

Vessel Stress Summation Comparison (N./mm²):

Type of Stress Int.	Max. S.I.	S.I. Allowable	Result
Pm (SUS)	6.50	77.74	Passed
Pm+Pl (SUS)	17.09	116.61	Passed
Pm+Pl+Q (TOTAL)	80.04	233.22	Passed

*Because only sustained loads were specified, the Pm+Pl+Q allowable was 3 * Smh.*

PV Elite is a trademark of Intergraph CADWorx & Analysis Solutions, Inc. 2020

Input, Nozzle Desc: N05B (8in) **From: 20**

Pressure for Reinforcement Calculations	P	4.069	bars
Temperature for Internal Pressure	Temp	234	°C
Design External Pressure	Pext	1.03	bars
Temperature for External Pressure	Tempex	100	°C
Shell Material		SA-312 TP316L	
Shell Allowable Stress at Temperature	Sv	77.74	N./mm²
Shell Allowable Stress At Ambient	Sva	115.15	N./mm²
Inside Diameter of Cylindrical Shell	D	254.51	mm.
Design Length of Section	L	900.0000	mm.
Shell Finished (Minimum) Thickness	t	8.1121	mm.
Shell Internal Corrosion Allowance	c	0.0000	mm.
Shell External Corrosion Allowance	co	0.0000	mm.
Distance from Bottom/Left Tangent		309.27	mm.
User Entered Minimum Design Metal Temperature		5.00	°C

Type of Element Connected to the Shell : Nozzle

Material		SA-312 TP316L	
Material UNS Number		S31603	
Material Specification/Type		Smls. pipe	
Allowable Stress at Temperature	Sn	77.70	N./mm²
Allowable Stress At Ambient	Sna	115.10	N./mm²
Diameter Basis (for tr calc only)		ID	
Layout Angle		180.00	deg
Diameter		8.0000	in.
Size and Thickness Basis		Minimum	
Nominal Thickness	tn	STD	
Flange Material		SA-182 F316L	
Flange Type		Weld Neck Flange	
Corrosion Allowance	can	0.0000	mm.
Joint Efficiency of Shell Seam at Nozzle	E1	1.00	
Joint Efficiency of Nozzle Neck	En	1.00	
Outside Projection	ho	150.0000	mm.
Weld leg size between Nozzle and Pad/Shell	Wo	10.0000	mm.
Groove weld depth between Nozzle and Vessel	Wgnv	8.1121	mm.
Inside Projection	h	0.0000	mm.
Weld leg size, Inside Element to Shell	Wi	0.0000	mm.
Pad Material		SA-516 70	
Pad Allowable Stress at Temperature	Sp	137.90	N./mm²
Pad Allowable Stress At Ambient	Spa	137.90	N./mm²
Diameter of Pad along vessel surface	Dp	320.0000	mm.
Thickness of Pad	te	10.0000	mm.

```
Weld leg size between Pad and Shell          Wp      8.0000  mm.
Groove weld depth between Pad and Nozzle    Wgpn    10.0000  mm.
Reinforcing Pad Width                       50.4625  mm.
This is a Manway or Access Opening.

Flange Class                                150
Flange Grade                                GR 2.3
```

The Pressure Design option was Design Pressure + static head.

Nozzle Sketch (may not represent actual weld type/configuration)

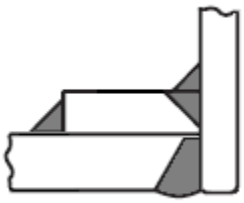

Insert/Set-in Nozzle With Pad, no Inside projection

Reinforcement CALCULATION, Description: N05B (8in)

ASME Code, Section VIII, Div. 1, 2019, UG-37 to UG-45

```
Actual Inside Diameter Used in Calculation          8.061  in.
Actual Thickness Used in Calculation                0.282  in.
```

Note:
Post Weld Heat Treatment is required for this nozzle and it was specified as being heat treated.

Nozzle input data check completed without errors.

Reqd thk per UG-37(a) of Cylindrical Shell, Tr [Int. Press]

```
  = (P*R)/(Sv*E-0.6*P) per UG-27 (c)(1)
  = (4.07*127.254)/(78*1.0-0.6*4.07)
  = 0.6681 mm.
```

Reqd thk per UG-37(a) of Nozzle Wall, Trn [Int. Press]

```
  = (P*R)/(Sn*E-0.6*P) per UG-27 (c)(1)
  = (4.07*102.38)/(78*1.0-0.6*4.07)
  = 0.5378 mm.
```

Required Nozzle thickness under External Pressure per UG-28 : 0.6143 mm.

UG-40, Limits of Reinforcement : [External Pressure]

```
Parallel to Vessel Wall (Diameter Limit)      Dl   409.5242  mm.
Parallel to Vessel Wall, opening length        d   204.7621  mm.
```

```
Normal to Vessel Wall (Thickness Limit), pad side Tlwp    20.2803  mm.
```

Nozzle Junction Minimum Design Metal Temperature (MDMT) Calculations:

Nozzle to Flange Weld skipped as Nozzle is not a Carbon Steel material.

Nozzle-Pad Weld for Nozzle skipped, as Nozzle is not a Carbon Steel material.

Nozzle Neck to Pad Weld for Reinforcement pad, Curve: B

Govrn. thk, tg = 7.156, tr = 0.363, c = 0.0 mm., E* = 1.0
Thickness Ratio = tr * (E*)/(tg - c) = 0.051, Temp. Reduction = 78 °C

```
Min Metal Temp. w/o impact per UCS-66, Curve B            -29 °C
Min Metal Temp. at Required thickness (UCS 66.1)         -104 °C
```

Shell to Pad Weld Junction at Pad OD, Curve: B

Govrn. thk, tg = 8.112, tr = 0.451, c = 0.0 mm., E* = 1.0
Thickness Ratio = tr * (E*)/(tg - c) = 0.056, Temp. Reduction = 78 °C

```
Min Metal Temp. w/o impact per UCS-66, Curve B            -29 °C
Min Metal Temp. at Required thickness (UCS 66.1)         -104 °C
```

Nozzle-Shell Weld for Nozzle skipped as Nozzle is not a Carbon Steel material.

```
Gov. MDMT of the Reinforcement Pad                     :  -104 °C
Gov. MDMT of the nozzle to shell joint welded assembly :  -104 °C
```

Note:
The flange pressure ratio is less than 0.35. Impact testing is not required due to low stress per UHA-51(g).

Design Pressure/Ambient Rating = 4.07/15.90 = 0.256

Warning: Rn/R(0.80) > 0.7 - Performing analysis per Appendix 46-3(a)(1).

Please check Code paragraph 4.5.17.1 regarding openings in compression. A Part 5 analysis may be required.

Nozzle Calculations per Section 4.5: External Pressure Case:

Nozzle Radius for Force Calculation [Rxn]:

```
= tn / ln[1 + tn/Rn ]
= 7.156/ln[ 1 + 7.156/102.381 ]
= 105.919 mm.
```

Shell Radius for Force Calculation [Rxs]:

```
= teff / ln[ 1 + teff/Reff ]
= 18.112/ln[ 1 + 18.112/127.254 ]
= 136.109 mm.
```

Allowable Local Primary Membrane Stress [Sallow]:

```
= Shell Fha Value
```

```
  = 77.739
  = 77.7 N./mm²
```

Determine Force acting on the Nozzle [fN]:

```
  = P * Rxn * LH
  = 1.034 * 105.919 * 45.18
  = 0.5 kN
```

Determine Force acting on the Shell [fS]:

```
  = P * Rxs( LR + tn )
  = 1.034 * 136.109( 49.515 + 7.156 )
  = 0.8 kN
```

Discontinuity Force from External Pressure [fY]:

```
  = P * Rxs * Rnc
  = 1.034 * 136.109 * 102.381
  = 1.4 kN
```

Area Resisting External Pressure [Ap]:

```
  = ( fS + fY + fN )/P
  = ( 0.8 + 1.4 + 0.5 )/1.034
  = 264.3 cm²
```

Maximum Allowable Working Pressure Candidate [Pmax1]:

```
  = Sallow /( 2 * Ap/AT - Rxs/teff )
  = 77.739/( 2 * 264.34/12.702 - 136.109/18.112 )
  = 22.8 bars
```

Maximum Allowable Working Pressure Candidate [Pmax2]:

```
  = min( Shell Fha, Nozzle Fha ) * [t/Rxs]
  = 77.739[8.112/136.109]
  = 46.3 bars
```

Maximum Allowable Working Pressure [Pmax]:

```
  = min( Pmax1, Pmax2 )
  = min( 22.79, 46.33 )
  = 22.790 bars
```

Average Primary Membrane Stress [SigmaAvg]:

```
  = ( fN + fS + fY ) / AT
  = ( 0.495 + 0.798 + 1.441 )/12.702
  = 2.152 N./mm²
```

General Primary Membrane Stress [SigmaCirc]:

```
  = P * Rxs / teff
  = 1.034 * 136.109/18.112
  = 0.8 N./mm²
```

Maximum Local Primary Membrane Stress [PL]:

```
  = max( 2 * SigmaAvg - SigmaCirc, SigmaCirc )
  = max( 2 * 2.152 - 0.777, 0.777 )
  = 3.5 N./mm²
```

Summary of Nozzle Pressure/Stress Results:

```
 Allowed Local Primary Membrane Stress   Sallow        77.74  N./mm²
```

```
Local Primary Membrane Stress              PL        3.53  N./mm²
Maximum Allowable External Pressure       Pmax      22.79  bars
```

Please check Code paragraph 4.5.17.1 regarding openings in compression. A Part 5 analysis may be required.

Nozzle Calculations per Section 4.5: Internal Pressure Case:

Nozzle Material Factor [frn]:
```
= min[Sn/S, 1]
= min[77.7/77.7, 1]
= 1.000
```

Pad Material Factor [frp]:
```
= min[Sp/S,1]
= min[137.9/77.7, 1]
= 1.000
```

Thickness of Nozzle [tn]:
```
= thickness - corrosion allowance
= 7.156 - 0.0
= 7.156 mm.
```

Shell Diameter to Thickness ratio [D/t]:
```
= Di/t
= 254.508/8.112
= 31.374  must be less than 400.
```

Effective Pressure Radius [Reff]:
```
= Di/2 + corrosion allowance
= 254.508/2 + 0.0
= 127.254 mm.
```

Effective Length of Vessel Wall [LR]:

For Nozzles with reinforcing pads, Lr is min[LR1, LR2, LR3]:

Limit [LR1]:
```
= sqrt( Reff * t ) + W
= sqrt( 127.254 * 8.112 ) + 50.462
= 82.592 mm.
```

Limit [LR2]:
```
= sqrt( ( Reff + t ) * ( t + te ) )
= sqrt( ( 127.254 + 8.112 ) * ( 8.112 + 10.0 ) )
= 49.515 mm.
```

Limit [LR3]:
```
= 2 * Rn
= 2 * 102.381
= 204.762 mm.
```

Final value of [LR]:
```
= min( LR1, LR2, LR3 )
= min( 82.592, 49.515, 204.762 )
```

```
  = 49.515 mm.
```

Thickness Limit Candidate [LH1]:

```
  = min[1.5t,te] + sqrt( Rn * tn )
  = min[1.5*8.112, 10.0] + sqrt( 102.381 * 7.156 )
  = 37.068 mm.
```

Thickness Limit Candidate [LH2]:

```
  = Lpr1
  = 150.0
  = 150.000 mm.
```

Thickness Limit Candidate [LH3]:

```
  = 8( t + te )
  = 8( 8.112 + 10.0 )
  = 144.897 mm.
```

Effective Nozzle Wall Length Outside the Vessel [LH]:

```
  = min[ LH1, LH2, LH3 ] + t    for set-in nozzles
  = min[ 37.068, 150.0, 144.897 ) + 8.112
  = 45.180 mm.
```

Effective Vessel Thickness [teff]:

```
  = t + (( A5 * frp ) / LR )
  = 8.112+((4.952*1.0)/49.515)
  = 18.112 mm.
```

Determine Parameter [Lamda]:

```
  = min( 12, ( 2*Rn + tn )/( sqrt( ( Di + teff ) * teff )) )
  = min( 12, (2*102.38 + 7.156)/( sqrt((254.51 + 18.112) * 18.112)) )
  = 3.016
```

Compute Areas A1-A43 (No Pad) or A1-A5 (With Pad) :

Area Contributed by the Vessel Wall [A1]:

$$= t * LR * \max((Lamda/5)^{0.85}, 1)$$
$$= 8.112 * 49.515 * \max((3.016/5)^{0.85}, 1)$$
$$= 4.017 \text{ cm}^2$$

Area Contributed by the Nozzle Outside the Vessel Wall [A2]:

```
  = tn * LH
  = 7.156 * 45.18
  = 3.233 cm²
```

Area Contributed by the Outside Fillet Weld [A41]:

$$= 0.5 * Leg41^2$$
$$= 0.5 * 10.0^2$$
$$= 0.500 \text{ cm}^2$$

Area Contributed by the Reinforcing Pad [A5]:

```
  = min( W * te , LR * te )
  = min( 50.462 * 10.0, 49.515 * 10.0 )
  = 4.952 cm²
```

The total area contributed by A1 through A5 [AT]:

```
  = A1 + frn( A2 + A3 ) + A41 + A42 + A43 + frp( A5 )
  = 4.017+1.0(3.233+0.0)+0.5+0.0+0.0+1.0(4.952)
  = 12.702 cm²
```

Nozzle Radius for Force Calculation [Rxn]:

```
  = tn / ln[1 + tn/Rn ]
  = 7.156/ln[ 1 + 7.156/102.381 ]
  = 105.919 mm.
```

Shell Radius for Force Calculation [Rxs]:

```
  = teff / ln[ 1 + teff/Reff ]
  = 18.112/ln[ 1 + 18.112/127.254 ]
  = 136.109 mm.
```

Allowable Local Primary Membrane Stress [Sallow]:

```
  = 1.5 * S * E
  = 1.5 * 77.739 * 1.0
  = 116.6 N./mm²
```

Determine Force acting on the Nozzle [fN]:

```
  = P * Rxn * LH
  = 4.069 * 105.919 * 45.18
  = 1.9 kN
```

Determine Force acting on the Shell [fS]:

```
  = P * Rxs( LR + tn )
  = 4.069 * 136.109( 49.515 + 7.156 )
  = 3.1 kN
```

Discontinuity Force from Internal Pressure [fY]:

```
  = P * Rxs * Rnc
  = 4.069 * 136.109 * 102.381
  = 5.7 kN
```

Area Resisting Internal Pressure [Ap]:

```
  = ( fS + fY + fN )/P
  = ( 3.1 + 5.7 + 1.9 )/4.069
  = 264.3 cm²
```

Maximum Allowable Working Pressure Candidate [Pmax1]:

```
  = Sallow /( 2 * Ap/AT - Rxs/teff )
  = 116.608/( 2 * 264.34/12.702 - 136.109/18.112 )
  = 34.2 bars
```

Maximum Allowable Working Pressure Candidate [Pmax2]:

```
  = S[t/Rxs]
  = 77.739[8.112/136.109]
  = 46.3 bars
```

Maximum Allowable Working Pressure [Pmax]:

```
  = min( Pmax1, Pmax2 )
  = min( 34.186, 46.33 )
  = 34.186 bars
```

Average Primary Membrane Stress [SigmaAvg]:

```
  = ( fN + fS + fY ) / AT
  = ( 1.947 + 3.138 + 5.669 )/12.702
  = 8.468 N./mm²
```

General Primary Membrane Stress [SigmaCirc]:

```
  = P * Rxs / teff
  = 4.069 * 136.109/18.112
  = 3.1 N./mm²
```

Maximum Local Primary Membrane Stress [PL]:

```
  = max( 2 * SigmaAvg - SigmaCirc, SigmaCirc )
  = max( 2 * 8.468 - 3.058, 3.058 )
  = 13.9 N./mm²
```

Summary of Nozzle Pressure/Stress Results:

```
 Allowed Local Primary Membrane Stress   Sallow      116.61  N./mm²
 Local Primary Membrane Stress               PL       13.88  N./mm²
 Maximum Allowable Working Pressure        Pmax       34.19  bars
```

Strength of Nozzle Attachment Welds per 4.5.14

Discontinuity Force Factor [ky]:

```
  = ( Rnc + tn ) / Rnc
  = ( 102.381 + 7.156 )/102.381
  = 1.070 For set-in Nozzles
```

Weld Length of Nozzle to Shell Weld [Ltau]:

```
  = pi/2 * ( Rn + tn )
  = pi/2 * ( 102.381 + 7.156 )
  = 172.061 mm.
```

Weld Length of Pad to Shell Weld [LtauP]:

```
  = pi/2 * ( Rn + tn + W )
  = pi/2 * ( 102.381 + 7.156 + 50.462 )
  = 251.327 mm.
```

Weld Throat Dimensions, (0.7071*Leg Dimensions) [L41T, L42T, L43T]:

```
  = 7.071,   5.657,  0.000, mm.
```

Required Weld Throat Dimensions :
tc, L41T = 7.071, must be >= min(0.7 * 7.156, 6.000) Passed
tf1, L42T = 5.657, must be >= min(0.6 * 10.000, 0.6 * 8.112) Passed

Weld Load Value [fwelds]:

```
  = min( fy * ky, 1.5 * Sn( A2 + A3 ), pi/4*P*Rn^2*ky^2 )
  = min(6*1.07,1.5*77.7(3.233+0.0),pi/4*4.1*102.38^2*1.07^2)
  = 3.834 kN
```

Discontinuity Force [fws]:

```
  = fwelds * t * S/( t * S + te * Sp )
  = 3.8*8.11*78/(8.112*78+10.0*138)
  = 1.203 kN
```

Discontinuity Force [fwp]:

```
  = fwelds * te  * Sp  / ( t * S + te * Sp )
```

```
  = 3.8*10.0*138/(8.112*78+10.0*138)
  = 2.631 kN
```

Shear Stress [tau1]:

```
  = fws / ( Ltau  * ( 0.6 * tw1 + 0.49 * L43T ) )
  = 1.203/( 172.061 * ( 0.6 * 8.112 + 0.49 * 0.0 ) )
  = 1.437 N./mm²
```

Shear Stress [tau2]:

```
  = fwp / ( Ltau  * ( 0.6 * tw2 + 0.49 * L41T ) )
  = 2.631/( 172.061 * ( 0.6 * 10.0 + 0.49 * 7.071 ) )
  = 1.616 N./mm²
```

Shear Stress [tau3]:

```
  = fwp / ( Ltau  * ( 0.49 * L42T ) )
  = 2.631/( 251.327 * ( 0.49 * 5.657 ) )
  = 3.777 N./mm²
```

Maximum Shear Stress in the Welds:

```
  = max( tau1, tau2, tau3 )
  = max( 1.437, 1.616, 3.777 )
  = 3.8 must be less than or equal to 77.7 N./mm²
```

Weld Size Calculations, Description: N05B (8in)

```
 Intermediate Calc. for nozzle/shell Welds   Tmin      7.1564  mm.
 Intermediate Calc. for pad/shell Welds   TminPad      9.2710  mm.
```

Results Per UW-16.1:

```
                        Required Thickness    Actual Thickness
 Nozzle Weld           5.0095 = 0.7 * tmin.  7.0700 = 0.7 * Wo mm.
 Pad Weld              4.6355 = 0.5*TminPad  5.6560 = 0.7 * Wp mm.
```

Maximum Allowable Pressure for this Nozzle at this Location:

```
 Converged Max. Allow. Pressure in Operating case   34  bars

 Nozzle is O.K. for the External Pressure           1  bars
```

The Drop for this Nozzle is : 62.4843 mm.
The Cut Length for this Nozzle is, Drop + Ho + H + T : 220.5964 mm.

PV Elite is a trademark of Intergraph CADWorx & Analysis Solutions, Inc. 2020

Input, Nozzle Desc: N05A (8in) **From: 50**

Pressure for Reinforcement Calculations	P	4.000	bars
Temperature for Internal Pressure	Temp	234	°C
Design External Pressure	Pext	1.03	bars
Temperature for External Pressure	Tempex	100	°C
Shell Material		SA-312 TP316L	
Shell Allowable Stress at Temperature	Sv	77.74	N./mm²
Shell Allowable Stress At Ambient	Sva	115.15	N./mm²
Inside Diameter of Cylindrical Shell	D	254.51	mm.
Design Length of Section	L	1200.0001	mm.
Shell Finished (Minimum) Thickness	t	8.1121	mm.
Shell Internal Corrosion Allowance	c	0.0000	mm.
Shell External Corrosion Allowance	co	0.0000	mm.
Distance from Bottom/Left Tangent		1423.32	mm.
User Entered Minimum Design Metal Temperature		5.00	°C

Type of Element Connected to the Shell : Nozzle

Material		SA-312 TP316L	
Material UNS Number		S31603	
Material Specification/Type		Smls. pipe	
Allowable Stress at Temperature	Sn	77.74	N./mm²
Allowable Stress At Ambient	Sna	115.15	N./mm²
Diameter Basis (for tr calc only)		ID	
Layout Angle		180.00	deg
Diameter		8.0000	in.
Size and Thickness Basis		Minimum	
Nominal Thickness	tn	STD	
Flange Material		SA-182 F316L	
Flange Type		Weld Neck Flange	
Corrosion Allowance	can	0.0000	mm.
Joint Efficiency of Shell Seam at Nozzle	E1	1.00	
Joint Efficiency of Nozzle Neck	En	1.00	
Outside Projection	ho	150.0000	mm.
Weld leg size between Nozzle and Pad/Shell	Wo	10.0000	mm.
Groove weld depth between Nozzle and Vessel	Wgnv	8.1121	mm.
Inside Projection	h	0.0000	mm.
Weld leg size, Inside Element to Shell	Wi	0.0000	mm.
Pad Material		SA-516 70	
Pad Allowable Stress at Temperature	Sp	137.90	N./mm²
Pad Allowable Stress At Ambient	Spa	137.90	N./mm²
Diameter of Pad along vessel surface	Dp	320.0000	mm.
Thickness of Pad	te	10.0000	mm.

```
Weld leg size between Pad and Shell          Wp      8.0000  mm.
Groove weld depth between Pad and Nozzle    Wgpn    10.0000  mm.
Reinforcing Pad Width                       50.4625  mm.
This is a Manway or Access Opening.

Flange Class                                150
Flange Grade                                GR 2.3
```

The Pressure Design option was Design Pressure + static head.

Nozzle Sketch (may not represent actual weld type/configuration)

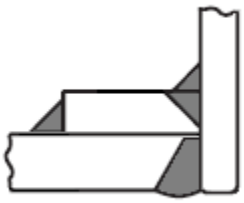

Insert/Set-in Nozzle With Pad, no Inside projection

Reinforcement CALCULATION, Description: N05A (8in)

ASME Code, Section VIII, Div. 1, 2019, UG-37 to UG-45

```
Actual Inside Diameter Used in Calculation          8.061  in.
Actual Thickness Used in Calculation                0.282  in.
```

Note:
Post Weld Heat Treatment is required for this nozzle and it was specified as being heat treated.

Nozzle input data check completed without errors.

Reqd thk per UG-37(a) of Cylindrical Shell, Tr [Int. Press]

```
  = (P*R)/(Sv*E-0.6*P) per UG-27 (c)(1)
  = (4.0*127.254)/(78*1.0-0.6*4.0)
  = 0.6568 mm.
```

Reqd thk per UG-37(a) of Nozzle Wall, Trn [Int. Press]

```
  = (P*R)/(Sn*E-0.6*P) per UG-27 (c)(1)
  = (4.0*102.38)/(78*1.0-0.6*4.0)
  = 0.5285 mm.
```

Required Nozzle thickness under External Pressure per UG-28 : 0.6143 mm.

UG-40, Limits of Reinforcement : [External Pressure]

```
Parallel to Vessel Wall (Diameter Limit)      Dl   409.5242  mm.
Parallel to Vessel Wall, opening length        d   204.7621  mm.
```

```
Normal to Vessel Wall (Thickness Limit), pad side Tlwp    20.2803  mm.
```

Nozzle Junction Minimum Design Metal Temperature (MDMT) Calculations:

Nozzle to Flange Weld skipped as Nozzle is not a Carbon Steel material.

Nozzle-Pad Weld for Nozzle skipped, as Nozzle is not a Carbon Steel material.

Nozzle Neck to Pad Weld for Reinforcement pad, Curve: B

Govrn. thk, tg = 7.156, tr = 0.356, c = 0.0 mm., E* = 1.0
Thickness Ratio = tr * (E*)/(tg - c) = 0.05, Temp. Reduction = 78 °C

```
Min Metal Temp. w/o impact per UCS-66, Curve B            -29 °C
Min Metal Temp. at Required thickness (UCS 66.1)         -104 °C
```

Shell to Pad Weld Junction at Pad OD, Curve: B

Govrn. thk, tg = 8.112, tr = 0.443, c = 0.0 mm., E* = 1.0
Thickness Ratio = tr * (E*)/(tg - c) = 0.055, Temp. Reduction = 78 °C

```
Min Metal Temp. w/o impact per UCS-66, Curve B            -29 °C
Min Metal Temp. at Required thickness (UCS 66.1)         -104 °C
```

Nozzle-Shell Weld for Nozzle skipped as Nozzle is not a Carbon Steel material.

```
Gov. MDMT of the Reinforcement Pad                     :  -104 °C
Gov. MDMT of the nozzle to shell joint welded assembly :  -104 °C
```

Note:
The flange pressure ratio is less than 0.35. Impact testing is not required due to low stress per UHA-51(g).

Design Pressure/Ambient Rating = 4.00/15.90 = 0.252

Warning: Rn/R(0.80) > 0.7 - Performing analysis per Appendix 46-3(a)(1).

Please check Code paragraph 4.5.17.1 regarding openings in compression. A Part 5 analysis may be required.

Nozzle Calculations per Section 4.5: External Pressure Case:

Nozzle Radius for Force Calculation [Rxn]:

```
= tn / ln[1 + tn/Rn ]
= 7.156/ln[ 1 + 7.156/102.381 ]
= 105.919 mm.
```

Shell Radius for Force Calculation [Rxs]:

```
= teff / ln[ 1 + teff/Reff ]
= 18.112/ln[ 1 + 18.112/127.254 ]
= 136.109 mm.
```

Allowable Local Primary Membrane Stress [Sallow]:

```
= Shell Fha Value
```

```
  = 77.739
  = 77.7 N./mm²
```

Determine Force acting on the Nozzle [fN]:

```
  = P * Rxn * LH
  = 1.034 * 105.919 * 45.18
  = 0.5 kN
```

Determine Force acting on the Shell [fS]:

```
  = P * Rxs( LR + tn )
  = 1.034 * 136.109( 49.515 + 7.156 )
  = 0.8 kN
```

Discontinuity Force from External Pressure [fY]:

```
  = P * Rxs * Rnc
  = 1.034 * 136.109 * 102.381
  = 1.4 kN
```

Area Resisting External Pressure [Ap]:

```
  = ( fS + fY + fN )/P
  = ( 0.8 + 1.4 + 0.5 )/1.034
  = 264.3 cm²
```

Maximum Allowable Working Pressure Candidate [Pmax1]:

```
  = Sallow /( 2 * Ap/AT - Rxs/teff )
  = 77.739/( 2 * 264.34/12.702 - 136.109/18.112 )
  = 22.8 bars
```

Maximum Allowable Working Pressure Candidate [Pmax2]:

```
  = min( Shell Fha, Nozzle Fha ) * [t/Rxs]
  = 77.739[8.112/136.109]
  = 46.3 bars
```

Maximum Allowable Working Pressure [Pmax]:

```
  = min( Pmax1, Pmax2 )
  = min( 22.79, 46.33 )
  = 22.790 bars
```

Average Primary Membrane Stress [SigmaAvg]:

```
  = ( fN + fS + fY ) / AT
  = ( 0.495 + 0.798 + 1.441 )/12.702
  = 2.152 N./mm²
```

General Primary Membrane Stress [SigmaCirc]:

```
  = P * Rxs / teff
  = 1.034 * 136.109/18.112
  = 0.8 N./mm²
```

Maximum Local Primary Membrane Stress [PL]:

```
  = max( 2 * SigmaAvg - SigmaCirc, SigmaCirc )
  = max( 2 * 2.152 - 0.777, 0.777 )
  = 3.5 N./mm²
```

Summary of Nozzle Pressure/Stress Results:

```
 Allowed Local Primary Membrane Stress   Sallow        77.74  N./mm²
```

```
Local Primary Membrane Stress              PL        3.53  N./mm²
Maximum Allowable External Pressure       Pmax      22.79  bars
```

Please check Code paragraph 4.5.17.1 regarding openings in compression. A Part 5 analysis may be required.

Nozzle Calculations per Section 4.5: Internal Pressure Case:

Nozzle Material Factor [frn]:
```
= min[Sn/S, 1]
= min[77.7/77.7, 1]
= 1.000
```

Pad Material Factor [frp]:
```
= min[Sp/S,1]
= min[137.9/77.7, 1]
= 1.000
```

Thickness of Nozzle [tn]:
```
= thickness - corrosion allowance
= 7.156 - 0.0
= 7.156 mm.
```

Shell Diameter to Thickness ratio [D/t]:
```
= Di/t
= 254.508/8.112
= 31.374  must be less than 400.
```

Effective Pressure Radius [Reff]:
```
= Di/2 + corrosion allowance
= 254.508/2 + 0.0
= 127.254 mm.
```

Effective Length of Vessel Wall [LR]:

For Nozzles with reinforcing pads, Lr is min[LR1, LR2, LR3]:

Limit [LR1]:
```
= sqrt( Reff * t ) + W
= sqrt( 127.254 * 8.112 ) + 50.462
= 82.592 mm.
```

Limit [LR2]:
```
= sqrt( ( Reff + t ) * ( t + te ) )
= sqrt( ( 127.254 + 8.112 ) * ( 8.112 + 10.0 ) )
= 49.515 mm.
```

Limit [LR3]:
```
= 2 * Rn
= 2 * 102.381
= 204.762 mm.
```

Final value of [LR]:
```
= min( LR1, LR2, LR3 )
= min( 82.592, 49.515, 204.762 )
```

```
  = 49.515 mm.
```

Thickness Limit Candidate [LH1]:

```
  = min[1.5t,te] + sqrt( Rn * tn )
  = min[1.5*8.112, 10.0] + sqrt( 102.381 * 7.156 )
  = 37.068 mm.
```

Thickness Limit Candidate [LH2]:

```
  = Lpr1
  = 150.0
  = 150.000 mm.
```

Thickness Limit Candidate [LH3]:

```
  = 8( t + te )
  = 8( 8.112 + 10.0 )
  = 144.897 mm.
```

Effective Nozzle Wall Length Outside the Vessel [LH]:

```
  = min[ LH1, LH2, LH3 ] + t    for set-in nozzles
  = min[ 37.068, 150.0, 144.897 ) + 8.112
  = 45.180 mm.
```

Effective Vessel Thickness [teff]:

```
  = t + (( A5 * frp ) / LR )
  = 8.112+((4.952*1.0)/49.515)
  = 18.112 mm.
```

Determine Parameter [Lamda]:

```
  = min( 12, ( 2*Rn + tn )/( sqrt( ( Di + teff ) * teff )) )
  = min( 12, (2*102.38 + 7.156)/( sqrt((254.51 + 18.112) * 18.112)) )
  = 3.016
```

Compute Areas A1-A43 (No Pad) or A1-A5 (With Pad) :

Area Contributed by the Vessel Wall [A1]:

$$= t * LR * \max((Lamda/5)^{0.85}, 1)$$
$$= 8.112 * 49.515 * \max((3.016/5)^{0.85}, 1)$$
$$= 4.017 \text{ cm}^2$$

Area Contributed by the Nozzle Outside the Vessel Wall [A2]:

```
  = tn * LH
  = 7.156 * 45.18
  = 3.233 cm²
```

Area Contributed by the Outside Fillet Weld [A41]:

$$= 0.5 * Leg41^2$$
$$= 0.5 * 10.0^2$$
$$= 0.500 \text{ cm}^2$$

Area Contributed by the Reinforcing Pad [A5]:

```
  = min( W * te , LR * te )
  = min( 50.462 * 10.0, 49.515 * 10.0 )
  = 4.952 cm²
```

The total area contributed by A1 through A5 [AT]:

```
  = A1 + frn( A2 + A3 ) + A41 + A42 + A43 + frp( A5 )
  = 4.017+1.0(3.233+0.0)+0.5+0.0+0.0+1.0(4.952)
  = 12.702 cm²
```

Nozzle Radius for Force Calculation [Rxn]:

```
  = tn / ln[1 + tn/Rn ]
  = 7.156/ln[ 1 + 7.156/102.381 ]
  = 105.919 mm.
```

Shell Radius for Force Calculation [Rxs]:

```
  = teff / ln[ 1 + teff/Reff ]
  = 18.112/ln[ 1 + 18.112/127.254 ]
  = 136.109 mm.
```

Allowable Local Primary Membrane Stress [Sallow]:

```
  = 1.5 * S * E
  = 1.5 * 77.739 * 1.0
  = 116.6 N./mm²
```

Determine Force acting on the Nozzle [fN]:

```
  = P * Rxn * LH
  = 4.0 * 105.919 * 45.18
  = 1.9 kN
```

Determine Force acting on the Shell [fS]:

```
  = P * Rxs( LR + tn )
  = 4.0 * 136.109( 49.515 + 7.156 )
  = 3.1 kN
```

Discontinuity Force from Internal Pressure [fY]:

```
  = P * Rxs * Rnc
  = 4.0 * 136.109 * 102.381
  = 5.6 kN
```

Area Resisting Internal Pressure [Ap]:

```
  = ( fS + fY + fN )/P
  = ( 3.1 + 5.6 + 1.9 )/4.0
  = 264.3 cm²
```

Maximum Allowable Working Pressure Candidate [Pmax1]:

```
  = Sallow /( 2 * Ap/AT - Rxs/teff )
  = 116.608/( 2 * 264.34/12.702 - 136.109/18.112 )
  = 34.2 bars
```

Maximum Allowable Working Pressure Candidate [Pmax2]:

```
  = S[t/Rxs]
  = 77.739[8.112/136.109]
  = 46.3 bars
```

Maximum Allowable Working Pressure [Pmax]:

```
  = min( Pmax1, Pmax2 )
  = min( 34.186, 46.33 )
  = 34.186 bars
```

Average Primary Membrane Stress [SigmaAvg]:

```
= ( fN + fS + fY ) / AT
= ( 1.914 + 3.085 + 5.574 )/12.702
= 8.325 N./mm²
```

General Primary Membrane Stress [SigmaCirc]:

```
= P * Rxs / teff
= 4.0 * 136.109/18.112
= 3.0 N./mm²
```

Maximum Local Primary Membrane Stress [PL]:

```
= max( 2 * SigmaAvg - SigmaCirc, SigmaCirc )
= max( 2 * 8.325 - 3.006, 3.006 )
= 13.6 N./mm²
```

Summary of Nozzle Pressure/Stress Results:

```
Allowed Local Primary Membrane Stress   Sallow      116.61  N./mm²
Local Primary Membrane Stress               PL       13.64  N./mm²
Maximum Allowable Working Pressure        Pmax       34.19  bars
```

Strength of Nozzle Attachment Welds per 4.5.14

Discontinuity Force Factor [ky]:

```
= ( Rnc + tn ) / Rnc
= ( 102.381 + 7.156 )/102.381
= 1.070 For set-in Nozzles
```

Weld Length of Nozzle to Shell Weld [Ltau]:

```
= pi/2 * ( Rn + tn )
= pi/2 * ( 102.381 + 7.156 )
= 172.061 mm.
```

Weld Length of Pad to Shell Weld [LtauP]:

```
= pi/2 * ( Rn + tn + W )
= pi/2 * ( 102.381 + 7.156 + 50.462 )
= 251.327 mm.
```

Weld Throat Dimensions, (0.7071*Leg Dimensions) [L41T, L42T, L43T]:

```
= 7.071,   5.657,  0.000, mm.
```

Required Weld Throat Dimensions :
tc, L41T = 7.071, must be >= min(0.7 * 7.156, 6.000) Passed
tf1, L42T = 5.657, must be >= min(0.6 * 10.000, 0.6 * 8.112) Passed

Weld Load Value [fwelds]:

```
= min( fy * ky, 1.5 * Sn( A2 + A3 ), pi/4*P*Rn^2*ky^2 )
= min(6*1.07,1.5*77.7(3.233+0.0),pi/4*4.0*102.38^2*1.07^2)
= 3.769 kN
```

Discontinuity Force [fws]:

```
= fwelds * t * S/( t * S + te * Sp )
= 3.8*8.11*78/(8.112*78+10.0*138)
= 1.183 kN
```

Discontinuity Force [fwp]:

```
= fwelds * te  * Sp  / ( t * S + te * Sp )
```

```
  = 3.8*10.0*138/(8.112*78+10.0*138)
  = 2.586 kN
```

Shear Stress [tau1]:

```
  = fws / ( Ltau  * ( 0.6 * tw1 + 0.49 * L43T ) )
  = 1.183/( 172.061 * ( 0.6 * 8.112 + 0.49 * 0.0 ) )
  = 1.413 N./mm²
```

Shear Stress [tau2]:

```
  = fwp / ( Ltau  * ( 0.6 * tw2 + 0.49 * L41T ) )
  = 2.586/( 172.061 * ( 0.6 * 10.0 + 0.49 * 7.071 ) )
  = 1.588 N./mm²
```

Shear Stress [tau3]:

```
  = fwp / ( Ltau  * ( 0.49 * L42T ) )
  = 2.586/( 251.327 * ( 0.49 * 5.657 ) )
  = 3.713 N./mm²
```

Maximum Shear Stress in the Welds:

```
  = max( tau1, tau2, tau3 )
  = max( 1.413, 1.588, 3.713 )
  = 3.7 must be less than or equal to 77.7 N./mm²
```

Weld Size Calculations, Description: N05A (8in)

```
 Intermediate Calc. for nozzle/shell Welds   Tmin      7.1564  mm.
 Intermediate Calc. for pad/shell Welds   TminPad      9.2710  mm.
```

Results Per UW-16.1:

```
                      Required Thickness    Actual Thickness
 Nozzle Weld          5.0095 = 0.7 * tmin.  7.0700 = 0.7 * Wo mm.
 Pad Weld             4.6355 = 0.5*TminPad  5.6560 = 0.7 * Wp mm.
```

Maximum Allowable Pressure for this Nozzle at this Location:

```
 Converged Max. Allow. Pressure in Operating case   34  bars

 Nozzle is O.K. for the External Pressure           1  bars
```

The Drop for this Nozzle is : 62.4843 mm.
The Cut Length for this Nozzle is, Drop + Ho + H + T : 220.5964 mm.

PV Elite is a trademark of Intergraph CADWorx & Analysis Solutions, Inc. 2020

Input, Nozzle Desc: K1A (2in) **From: 50**

Pressure for Reinforcement Calculations	P	4.000	bars
Temperature for Internal Pressure	Temp	234	°C
Design External Pressure	Pext	1.03	bars
Temperature for External Pressure	Tempex	100	°C
Shell Material		SA-312 TP316L	
Shell Allowable Stress at Temperature	Sv	77.74	N./mm²
Shell Allowable Stress At Ambient	Sva	115.15	N./mm²
Inside Diameter of Cylindrical Shell	D	254.51	mm.
Design Length of Section	L	1200.0001	mm.
Shell Finished (Minimum) Thickness	t	8.1121	mm.
Shell Internal Corrosion Allowance	c	0.0000	mm.
Shell External Corrosion Allowance	co	0.0000	mm.
Distance from Bottom/Left Tangent		2323.32	mm.
User Entered Minimum Design Metal Temperature		5.00	°C

Type of Element Connected to the Shell : Nozzle

Material		SA-182 F316L	
Material UNS Number		S31603	
Material Specification/Type		Forgings	
Allowable Stress at Temperature	Sn	77.74	N./mm²
Allowable Stress At Ambient	Sna	115.15	N./mm²
Diameter Basis (for tr calc only)		ID	
Layout Angle		0.00	deg
Diameter		2.0000	in.
Size and Thickness Basis		Actual	
Actual Thickness	tn	16.6000	mm.
Flange Material		SA-182 F316L	
Flange Type		Long Weld Neck	
Corrosion Allowance	can	0.0000	mm.
Joint Efficiency of Shell Seam at Nozzle	E1	1.00	
Joint Efficiency of Nozzle Neck	En	1.00	
Outside Projection	ho	150.0000	mm.
Weld leg size between Nozzle and Pad/Shell	Wo	10.0000	mm.
Groove weld depth between Nozzle and Vessel	Wgnv	3.6671	mm.
Inside Projection	h	0.0000	mm.
Weld leg size, Inside Element to Shell	Wi	0.0000	mm.
Flange Class		300	

```
Flange Grade                                          GR 2.2
```

The Pressure Design option was Design Pressure + static head.

Nozzle Sketch (may not represent actual weld type/configuration)

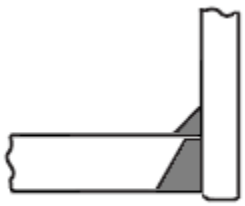

Insert/Set-in Nozzle No Pad, no Inside projection

Reinforcement CALCULATION, Description: K1A (2in)

ASME Code, Section VIII, Div. 1, 2019, UG-37 to UG-45

```
Actual Inside Diameter Used in Calculation            2.000  in.
Actual Thickness Used in Calculation                  0.654  in.
```

Nozzle input data check completed without errors.

Reqd thk per UG-37(a) of Cylindrical Shell, Tr [Int. Press]

```
  = (P*R)/(Sv*E-0.6*P) per UG-27 (c)(1)
  = (4.0*127.254)/(78*1.0-0.6*4.0)
  = 0.6568 mm.
```

Reqd thk per App. 1 of Nozzle Wall, Trn [Int. Press]

```
  = R( exp([P/(Sn*E)] - 1 ) per Appendix 1-2 (a)(1)
  = 25.4(exp([4.0/(77.74*1.0]-1)
  = 0.1310 mm.
```

Required Nozzle thickness under External Pressure per UG-28 : 0.3519 mm.

UG-40, Limits of Reinforcement : [Internal Pressure]

```
Parallel to Vessel Wall (Diameter Limit)            Dl   101.6000  mm.
Parallel to Vessel Wall, opening length              d    50.8000  mm.
Normal to Vessel Wall (Thickness Limit), no pad   Tlnp    20.2803  mm.
```

Weld Strength Reduction Factor [fr1]:

```
  = min( 1, Sn/Sv )
  = min( 1, 77.7/77.7 )
  = 1.000
```

Weld Strength Reduction Factor [fr2]:

```
= min( 1, Sn/Sv )
= min( 1, 77.7/77.7 )
= 1.000
```

Weld Strength Reduction Factor [fr3]:

```
= min( fr2, fr4 )
= min( 1.0, 1.0 )
= 1.000
```

Results of Nozzle Reinforcement Area Calculations: (cm²)

AREA AVAILABLE, A1 to A5		Design	External	Mapnc
Area Required	Ar	0.334	0.424	NA
Area in Shell	A1	3.787	3.272	NA
Area in Nozzle Wall	A2	6.680	6.590	NA
Area in Inward Nozzle	A3	0.000	0.000	NA
Area in Welds	A41+A42+A43	0.986	0.986	NA
Area in Element	A5	0.000	0.000	NA
TOTAL AREA AVAILABLE	Atot	11.453	10.848	NA

The External Pressure Case Governs the Analysis.

Nozzle Angle Used in Area Calculations 90.00 Degs.

The area available without a pad is Sufficient.

Area Required [A]:

```
= 0.5( d * tr*F + 2 * tn * tr*F(1-fr1) ) per UG-37(d)
= 0.5(50.8*1.6708*1+2*16.6*1.6708*1(1-1.0))
= 0.424 cm²
```

Reinforcement Areas per Figure UG-37.1

Area Available in Shell [A1]:

```
= d( E1*t - F*tr ) - 2 * tn( E1*t - F*tr ) * ( 1 - fr1 )
= 50.8( 1.0 * 8.1121 - 1.0 * 1.671 ) - 2 * 16.6
  ( 1.0 * 8.1121 - 1.0 * 1.6708 ) * ( 1 - 1.0 )
= 3.272 cm²
```

Area Available in Nozzle Projecting Outward [A2]:

```
= ( 2 * tlnp )( tn - trn )fr2
= ( 2 * 20.28 )( 16.6 - 0.35 )1.0
= 6.590 cm²
```

Area Available in Inward Weld + Outward Weld [A41 + A43]:

```
= ( Wo² - Area Lost )*fr2 + ( (Wi-can/0.707)² - Area Lost)*fr2
= ( 10.0² - 0.0144 ) * 1.0 + ( 0.0² -0.0 ) * 1.0
= 0.986 cm²
```

UG-45 Minimum Nozzle Neck Thickness Requirement: [Int. Press.]

```
Wall Thickness for Internal/External pressures      ta = 0.3519 mm.
Wall Thickness per UG16(b),                      tr16b = 1.5000 mm.
Wall Thickness, shell/head, internal pressure     trb1 = 0.6568 mm.
Wall Thickness                 tb1 = max(trb1, tr16b) = 1.5000 mm.
Wall Thickness                 tb2 = max(trb2, tr16b) = 1.5000 mm.
Wall Thickness per table UG-45                    tb3 = 4.8000 mm.
```

Determine Nozzle Thickness candidate [tb]:

```
= min[ tb3, max( tb1,tb2) ]
= min[ 4.8, max( 1.5, 1.5 ) ]
= 1.5000 mm.
```

Minimum Wall Thickness of Nozzle Necks [tUG-45]:

```
= max( ta, tb )
= max( 0.3519, 1.5 )
= 1.5000 mm.
```

Available Nozzle Neck Thickness = 16.6000 mm. --> OK

SA-312 TP316L, Min Metal Temp without impact per UHA-51: -196 °C

SA-182 F316L, Min Metal Temp without impact per UHA-51: -196 °C

Note:
The flange pressure ratio is less than 0.35. Impact testing is not required due to low stress per UHA-51(g).

Design Pressure/Ambient Rating = 4.00/49.60 = 0.081

Weld Size Calculations, Description: K1A (2in)

```
Intermediate Calc. for nozzle/shell Welds   Tmin      9.2710  mm.
```

Results Per UW-16.1:

```
                      Required Thickness    Actual Thickness
Nozzle Weld          6.0000 = Min per Code 7.0700 = 0.7 * Wo mm.
```

Weld Strength and Weld Loads per UG-41.1, Sketch (a) or (b)

Weld Load [W]:

```
= max( 0, (A-A1+2*tn*fr1*(E1*t-tr))Sv)
= max( 0, ( 0.4244 - 3.2722 + 2 * 16.6 * 1.0 *
  (1.0 * 8.1121 - 1.6708 ) )78)
= max( 0, -5.51) kN
```

Note: F is always set to 1.0 throughout the calculation.

Weld Load [W1]:

```
= (A2+A5+A4-(Wi-Can/.707)²*fr2)*Sv
= ( 6.5903 + 0.0 + 0.9856 - 0.0 * 1.0 ) * 78
```

```
  = 58.89 kN
```

Weld Load [W2]:

```
  = (A2 + A3 + A4 + (2 * tn * t * fr1)) * Sv
  = ( 6.5903 + 0.0 + 0.9856 + ( 2.6932 ) ) * 78
  = 79.82 kN
```

Weld Load [W3]:

```
  = (A2+A3+A4+A5+(2*tn*t*fr1))*S
  = ( 6.5903 + 0.0 + 0.9856 + 0.0 + ( 2.6932 ) ) * 78
  = 79.82 kN
```

Strength of Connection Elements for Failure Path Analysis

Shear, Outward Nozzle Weld [Sonw]:

```
  = (pi/2) * Dlo * Wo * 0.49 * Snw
  = ( 3.1416/2.0 ) * 84.0 * 10.0 * 0.49 * 78
  = 50. kN
```

Shear, Nozzle Wall [Snw]:

```
  = (pi *( Dlr + Dlo )/4 ) * ( Thk - Can ) * 0.7 * Sn
  = (3.1416 * 33.7) * ( 16.6 - 0.0 ) * 0.7 * 78
  = 96. kN
```

Tension, Shell Groove Weld [Tngw]:

```
  = (pi/2) * Dlo * (Wgnvi-Cas) * 0.74 * Sng
  = ( 3.1416/2.0 ) * 84.0 * ( 3.6671 - 0.0 ) * 0.74 * 78
  = 28. kN
```

Strength of Failure Paths:

```
  PATH11 = ( SONW + SNW ) = ( 50 + 96 ) = 146 kN
  PATH22 = ( Sonw + Tpgw + Tngw + Sinw )
         = ( 50 + 0 + 28 + 0 ) = 78 kN
  PATH33 = ( Sonw + Tngw + Sinw )
         = ( 50 + 28 + 0 ) = 78 kN
```

Summary of Failure Path Calculations:

```
 Path 1-1 = 145 kN , must exceed W = 0 kN  or W1 = 58 kN
 Path 2-2 = 78 kN , must exceed W = 0 kN  or W2 = 79 kN
 Path 3-3 = 78 kN , must exceed W = 0 kN  or W3 = 79 kN
```

Maximum Allowable Pressure for this Nozzle at this Location:

```
Converged Max. Allow. Pressure in Operating case   47  bars
```

Note: The MAWP of this junction was limited by the parent Shell/Head.

```
Nozzle is O.K. for the External Pressure           1  bars
```

The Drop for this Nozzle is : 7.1308 mm.
The Cut Length for this Nozzle is, Drop + Ho + H + T : 165.2429 mm.

PV Elite is a trademark of Intergraph CADWorx & Analysis Solutions, Inc. 2020

Hydrotest Case

Hydrostatic Test Pressure Results:

```
Pressure per UG99b     = 1.30 * M.A.W.P. * Sa/S          13.814  bars
Pressure per UG99b[36] = 1.30 * Design Pres * Sa/S        5.200  bars
Pressure per UG99c     = 1.30 * M.A.P. - Head(Hyd)       20.643  bars
Pressure per UG100     = 1.10 * M.A.W.P. * Sa/S          11.688  bars
Pressure per PED       = max(1.43*DP, 1.25*DP*ratio)      5.720  bars
Pressure per App 27-4  = M.A.W.P.                        10.626  bars

User Defined Hydrostatic Test Pressure at High Point      8.000  bars
```

Horizontal Test performed per: User Hydro Pressure

Please note that Nozzle, Shell, Head, Flange, etc MAWPs are all considered when determining the hydrotest pressure for those test types that are based on the MAWP of the vessel.

Stresses on Elements due to Test Pressure (N./mm² & bars):

From	To	Stress	Allowable	Ratio	Pressure
20	30	13.2	155.1	0.085	8.03
50	60	13.2	155.1	0.085	8.03

Stress ratios for Nozzle and Pad Materials (N./mm²):

Description	Pad/Nozzle	Ambient	Operating	Ratio
N03 (2in)	Nozzle	115.15	77.74	1.481
N05B (8in)	Nozzle	115.10	77.70	1.481
N05B (8in)	Pad	137.90	137.90	1.000
N05A (8in)	Nozzle	115.15	77.74	1.481
N05A (8in)	Pad	137.90	137.90	1.000
K1A (2in)	Nozzle	115.15	77.74	1.481
Minimum				1.000

Stress ratios for Pressurized Vessel Elements (N./mm²):

Description	Ambient	Operating	Ratio
Reboiler Connection	115.10	77.70	1.481
	115.15	77.74	1.481
	115.10	77.70	1.481
	115.10	77.70	1.481
	115.15	77.74	1.481
Reflux Cond. Connect	115.15	77.74	1.481
Minimum			1.481

Hoop Stress in Nozzle Wall during Pressure Test (N./mm²):

Description	Ambient	Operating	Ratio
N03 (2in)	1.77	155.14	0.011
N05B (8in)	11.97	155.10	0.077
N05A (8in)	11.97	155.14	0.077
K1A (2in)	1.71	155.14	0.011

Elements Suitable for Test Pressure.

PV Elite is a trademark of Intergraph CADWorx & Analysis Solutions, Inc. 2020

Combination Load Cases

Stress Combination Load Cases for Vertical Vessels:

Load Case Definition Key

```
IP = Longitudinal Stress due to Internal  Pressure
EP = Longitudinal Stress due to External  Pressure
HP = Longitudinal Stress due to Hydrotest Pressure
NP = No Pressure
EW = Longitudinal Stress due to Weight (No Liquid)
OW = Longitudinal Stress due to Weight (Operating)
HW = Longitudinal Stress due to Weight (Hydrotest)
WI = Bending Stress due to Wind Moment (Operating)
EQ = Bending Stress due to Earthquake Moment (Operating)
EE = Bending Stress due to Earthquake Moment (Empty)
HI = Bending Stress due to Wind Moment (Hydrotest)
HE = Bending Stress due to Earthquake Moment (Hydrotest)
WE = Bending Stress due to Wind Moment (Empty) (no CA)
WF = Bending Stress due to Wind Moment (Filled) (no CA)
CW = Longitudinal Stress due to Weight (Empty) (no CA)
VO = Bending Stress due to Vortex Shedding Loads ( Ope )
VE = Bending Stress due to Vortex Shedding Loads ( Emp )
VF = Bending Stress due to Vortex Shedding Loads ( Test No CA. )
FW = Axial Stress due to Vertical Forces for the Wind Case
FS = Axial Stress due to Vertical Forces for the Seismic Case
BW = Bending Stress due to Lat. Forces for the Wind Case, Corroded
BS = Bending Stress due to Lat. Forces for the Seismic Case, Corroded
BN = Bending Stress due to Lat. Forces for the Wind Case, UnCorroded
BU = Bending Stress due to Lat. Forces for the Seismic Case, UnCorroded
```

General Notes:

Case types HI and HE are in the Corroded condition.

Case types WE, WF, and CW are in the Un-Corroded condition.

A blank stress and stress ratio indicates that the corresponding stress comprising those components that did not contribute to that type of stress.

An asterisk (*) in the final column denotes overstress.

Analysis of Load Case 1 : NP+EW+WI+FW+BW

From Node	Tensile Stress	All. Tens. Stress	Comp. Stress	All. Comp. Stress	Tens. Ratio	Comp. Ratio
10	0.86	77.70	-2.04	64.57	0.0111	0.0316

20	1.84	77.74	-4.81	58.79	0.0237	0.0818
50	0.63	77.74	-2.63	58.79	0.0082	0.0448

Analysis of Load Case 2 : NP+EW+EE+FS+BS

From Node	Tensile Stress	All. Tens. Stress	Comp. Stress	All. Comp. Stress	Tens. Ratio	Comp. Ratio
10	22.18	77.70	-23.16	64.57	0.2854	0.3587
20	50.68	77.74	-53.19	58.79	0.6519	0.9047
50	23.81	77.74	-25.52	58.79	0.3063	0.4340

Analysis of Load Case 3 : NP+OW+WI+FW+BW

From Node	Tensile Stress	All. Tens. Stress	Comp. Stress	All. Comp. Stress	Tens. Ratio	Comp. Ratio
10	0.82	77.70	-2.08	64.57	0.0106	0.0322
20	1.80	77.74	-4.85	58.79	0.0232	0.0824
50	0.61	77.74	-2.66	58.79	0.0078	0.0452

Analysis of Load Case 4 : NP+OW+EQ+FS+BS

From Node	Tensile Stress	All. Tens. Stress	Comp. Stress	All. Comp. Stress	Tens. Ratio	Comp. Ratio
10	23.29	77.70	-24.36	64.57	0.2997	0.3772
20	53.28	77.74	-55.87	58.79	0.6854	0.9503
50	24.83	77.74	-26.58	58.79	0.3194	0.4522

Analysis of Load Case 5 : NP+HW+HI

From Node	Tensile Stress	All. Tens. Stress	Comp. Stress	All. Comp. Stress	Tens. Ratio	Comp. Ratio
10	0.57	155.10	-1.20	122.01	0.0037	0.0098
20	0.54	155.14	-3.51	110.43	0.0035	0.0318
50	0.26	155.14	-2.26	110.43	0.0016	0.0204

Analysis of Load Case 6 : NP+HW+HE

From Node	Tensile Stress	All. Tens. Stress	Comp. Stress	All. Comp. Stress	Tens. Ratio	Comp. Ratio
10	0.29	155.10	-0.92	122.01	0.0019	0.0076
20		155.14	-2.87	110.43		0.0260
50	0.07	155.14	-2.07	110.43	0.0004	0.0187

Analysis of Load Case 7 : IP+OW+WI+FW+BW

From Node	Tensile Stress	All. Tens. Stress	Comp. Stress	All. Comp. Stress	Tens. Ratio	Comp. Ratio
10	0.82	77.70	-2.08	64.57	0.0106	0.0322
20	4.89	77.74	-1.76	58.79	0.0629	0.0299
50	3.70	77.74		58.79	0.0475	

Analysis of Load Case 8 : IP+OW+EQ+FS+BS

From Node	Tensile Stress	All. Tens. Stress	Comp. Stress	All. Comp. Stress	Tens. Ratio	Comp. Ratio
10	23.29	77.70	-24.36	64.57	0.2997	0.3772
20	56.37	77.74	-52.78	58.79	0.7251	0.8978
50	27.92	77.74	-23.50	58.79	0.3591	0.3997

Analysis of Load Case 9 : EP+OW+WI+FW+BW

From Node	Tensile Stress	All. Tens. Stress	Comp. Stress	All. Comp. Stress	Tens. Ratio	Comp. Ratio
10	0.82	77.70	-2.08	64.57	0.0106	0.0322
20	0.91	77.74	-5.74	58.79	0.0116	0.0977
50		77.74	-3.55	58.79		0.0605

Analysis of Load Case 10 : EP+OW+EQ+FS+BS

From Node	Tensile Stress	All. Tens. Stress	Comp. Stress	All. Comp. Stress	Tens. Ratio	Comp. Ratio
10	23.29	77.70	-24.36	64.57	0.2997	0.3772
20	52.38	77.74	-56.77	58.79	0.6738	0.9656
50	23.93	77.74	-27.48	58.79	0.3079	0.4674

Analysis of Load Case 11 : HP+HW+HI

From Node	Tensile Stress	All. Tens. Stress	Comp. Stress	All. Comp. Stress	Tens. Ratio	Comp. Ratio
10	0.57	155.10	-1.20	122.01	0.0037	0.0098
20	4.55	155.14		110.43	0.0294	
50	4.27	155.14		110.43	0.0275	

Analysis of Load Case 12 : HP+HW+HE

From Node	Tensile Stress	All. Tens. Stress	Comp. Stress	All. Comp. Stress	Tens. Ratio	Comp. Ratio
10	0.29	155.10	-0.92	122.01	0.0019	0.0076
20	3.92	155.14		110.43	0.0252	
50	4.08	155.14		110.43	0.0263	

Analysis of Load Case 13 : IP+WE+EW

From Node	Tensile Stress	All. Tens. Stress	Comp. Stress	All. Comp. Stress	Tens. Ratio	Comp. Ratio
10	0.02	77.70	-1.19	64.57	0.0002	0.0185
20	2.99	77.74		58.79	0.0385	
50	3.16	77.74		58.79	0.0406	

Analysis of Load Case 14 : IP+WF+CW

From Node	Tensile Stress	All. Tens. Stress	Comp. Stress	All. Comp. Stress	Tens. Ratio	Comp. Ratio

10		77.70	-0.63	64.57		0.0097
20	1.56	77.74		58.79	0.0201	
50	2.06	77.74		58.79	0.0265	

Analysis of Load Case 15 : IP+VO+OW

From Node	Tensile Stress	All. Tens. Stress	Comp. Stress	All. Comp. Stress	Tens. Ratio	Comp. Ratio
10		77.70	-1.23	64.57		0.0191
20	2.95	77.74		58.79	0.0380	
50	3.13	77.74		58.79	0.0403	

Analysis of Load Case 16 : IP+VE+EW

From Node	Tensile Stress	All. Tens. Stress	Comp. Stress	All. Comp. Stress	Tens. Ratio	Comp. Ratio
10	0.02	77.70	-1.19	64.57	0.0002	0.0185
20	2.99	77.74		58.79	0.0385	
50	3.16	77.74		58.79	0.0406	

Analysis of Load Case 17 : NP+VO+OW

From Node	Tensile Stress	All. Tens. Stress	Comp. Stress	All. Comp. Stress	Tens. Ratio	Comp. Ratio
10		77.70	-1.23	64.57		0.0191
20		77.74	-2.91	58.79		0.0495
50	0.05	77.74	-2.09	58.79	0.0006	0.0356

Analysis of Load Case 18 : FS+BS+IP+OW

From Node	Tensile Stress	All. Tens. Stress	Comp. Stress	All. Comp. Stress	Tens. Ratio	Comp. Ratio
10	0.07	77.70	-1.14	64.57	0.0009	0.0177
20	3.18	77.74		58.79	0.0409	
50	3.28	77.74		58.79	0.0422	

Analysis of Load Case 19 : FS+BS+EP+OW

From Node	Tensile Stress	All. Tens. Stress	Comp. Stress	All. Comp. Stress	Tens. Ratio	Comp. Ratio
10	0.07	77.70	-1.14	64.57	0.0009	0.0177
20		77.74	-3.58	58.79		0.0609
50		77.74	-2.84	58.79		0.0484

Absolute Maximum of the all of the Stress Ratio's 0.9656

Element From : 20 to : 30
Governing Load Case 10 : EP+OW+EQ+FS+BS

```
                        |      Long |  Weight + | Eccentric |   Wind or |           |
|
               Element  |  Pressure |Axial Load |    Moment |Earthquake |  Combined |
Which |
           Description  |    Stress |    Stress |    Stress |    Stress |    Stress |
Side |
 ---------------------------------------------------------------------------------------
--------
           Element # 1  |       ... |      -0.5 |       0.6 |      23.2 |      23.3 | +
Tens |
           Element # 1  |       ... |      -0.5 |      -0.6 |     -23.2 |     -24.4 | -
Comp |
 ---------------------------------------------------------------------------------------
--------
           Element # 2  |      -0.9 |      -1.3 |       1.4 |      53.2 |      52.4 | +
Tens |
           Element # 2  |      -0.9 |      -1.3 |      -1.4 |     -53.2 |     -56.8 | -
Comp |
 ---------------------------------------------------------------------------------------
--------
           Element # 5  |      -0.9 |      -0.9 |       1.1 |      24.6 |      23.9 | +
Tens |
           Element # 5  |      -0.9 |      -0.9 |      -1.1 |     -24.6 |     -27.5 | -
Comp |
 ---------------------------------------------------------------------------------------
--------
```

PV Elite is a trademark of Intergraph CADWorx & Analysis Solutions, Inc. 2020

FEA for N05A,B 8INCH

Tabular Results

Results were generated with the finite element program FE/Pipe®. Stress results are post-processed in accordance with the rules specified in ASME Section III and ASME Section VIII, Division 2.

Analysis Time Stamp: Mon Dec 23 15:21:01 2024.

- Model Notes
- Load Case Report
- Solution Data
- ASME Code Stress Output Plots
- Stress Results - Notes
- ASME Overstressed Areas
- Highest Primary Stress Ratios
- Highest Secondary Stress Ratios
- Highest Fatigue Stress Ratios
- Highest Stress Ratios Per Region
- Stress Intensification Factors
- Allowable Loads
- Compressive Stress Summary
- Flexibilities
- Graphical Results

```
Model Notes
Model Notes

  Input Echo:

  Model Type                    : Cylindrical Shell

  Parent Geometry
         Parent Outside Diam.   :     273.000 mm.
         Thickness              :       8.100 mm.

  Parent Properties:
         Cold Allowable         :       115.1 MPa
         Hot  Allowable         :        77.9 MPa
         Material DB # 1071722.
         Ultimate Tensile (Amb) :       482.6 MPa
         Yield Strength (Amb)   :       172.4 MPa
         Yield Strength (Hot)   :       116.5 MPa
         Elastic Modulus (Amb)  :    195135.0 MPa
         Poissons Ratio         :       0.300
         Expansion Coefficient  :  0.1729E-04 mm./mm./deg.
```

```
        Weight Density          :  0.0000E+00  N /cu.mm.(NOT USED)

Nozzle Geometry
        Nozzle Outside Diam.    :     219.100 mm.
        Thickness               :       7.100 mm.
        Length                  :     200.000 mm.
        Nozzle Tilt Angle       :       0.000 deg.
        Distance from Top       :       0.000 mm.
        Distance from Bottom    :       0.000 mm.

Nozzle Properties
        Cold Allowable          :       115.1 MPa
        Hot  Allowable          :        77.9 MPa
        Material DB # 1071722.
        Ultimate Tensile (Amb)  :       482.6 MPa
        Yield Strength (Amb)    :       172.4 MPa
        Yield Strength (Hot)    :       116.5 MPa
        Elastic Modulus (Amb)   :    195135.0 MPa
        Poissons Ratio          :       0.300
        Expansion Coefficient   :  0.1729E-04 mm./mm./deg.
        Weight Density          :  0.0000E+00  N /cu.mm. (NOT USED)

Design Operating Cycles         :       7000.
Ambient Temperature (Deg.)      :       21.10

Uniform thermal expansion produces no stress in this geometry.
Any thermal loads will come through operating forces and
moments applied through the nozzle.

Nozzle Inside  Temperature      :      234.00 deg.
Nozzle Outside Temperature      :      234.00 deg.
Vessel Inside  Temperature      :      234.00 deg.
Vessel Outside Temperature      :      234.00 deg.

Nozzle Pressure                 :       0.350 MPa
Vessel Pressure                 :       0.350 MPa


No external forces or bending moments were included in this analysis.


The "top" or "positive" end of this model is "free" in
the axial and translational directions.

Stresses ARE nodally AVERAGED.

No weld dimensions have been given for the nozzle
connection to the shell. This will produce conservative
results for external loads and may tend to produce more
realistic inside surface pressure stresses.

The cylinder length or nozzle/branch location was adjusted
so that a better mesh could be generated at each end of the
cylinder. The nozzle is now located  546.00 mm.
down the length of the cylinder and the total cylinder length
is  1092.00 mm.

Vessel Centerline  Vector       :  0.000   1.000   0.000
Nozzle Orientation Vector       :  1.000   0.000   0.000
```

Table of Contents

```
Load Case Report
FEPipe Version 15.0          Jobname: NOZZLE                $P
Released Jan. 2021            3:20pm   DEC 23,2024


Load Case Report                                          $X

Inner and outer element temperatures are the same
throughout the model.  No thermal ratcheting
calculations will be performed.

THE   7  LOAD CASES ANALYZED ARE:

  1   SUSTAINED      (Pr Only)

      Sustained case run to satisfy local primary
      membrane and bending stress limits.

      /-------- Loads in Case   1
        Pressure Case    1

  2   OPERATING      (Fatigue Calc Performed)

      Case run to compute the operating stresses used in
      secondary, peak and range calculations as needed.

      /-------- Loads in Case   2
        Pressure Case    1

  3   Program Generated -- Force Only

      Case run to compute sif's and flexibilities.
      /-------- Loads in Case   3
        Loads from (Axial)

  4   Program Generated -- Force Only

      Case run to compute sif's and flexibilities.
      /-------- Loads in Case   4
        Loads from (Inplane)

  5   Program Generated -- Force Only

      Case run to compute sif's and flexibilities.
      /-------- Loads in Case   5
        Loads from (Outplane)

  6   Program Generated -- Force Only

      Case run to compute sif's and flexibilities.
      /-------- Loads in Case   6
        Loads from (Torsion)

  7   Program Generated -- Force Only

      Case run to compute sif's and flexibilities.
      /-------- Loads in Case   7
```

Pressure Case 1

Table of Contents

```
Solution Data
FEPipe Version 15.0          Jobname: NOZZLE                $P
Released Jan. 2021            3:20pm   DEC 23,2024
```

Solution Data

```
Maximum Solution Row Size =    1212
Number of Nodes           =    2950
Number of Elements        =     970
Number of Solution Cases  =       7
```

Summation of Loads per Case

Case #	FX	FY	FZ
1	-814.	19294.	0.
2	-814.	19294.	0.
3	652072.	0.	0.
4	0.	1.	0.
5	0.	0.	-1.
6	0.	0.	0.
7	-814.	19294.	0.

Table of Contents

```
ASME Code Stress Output Plots
FEPipe Version 15.0          Jobname: NOZZLE                $P
Released Jan. 2021            3:21pm   DEC 23,2024
```

ASME Code Stress Output Plots $X

1) Pl < SPL (SUS,Membrane) Case 1

2) Qb < SPS (SUS,Bending) Case 1

3) Pl+Pb+Q < SPS (SUS,Inside) Case 1

4) Pl+Pb+Q < SPS (SUS,Outside) Case 1

5) S1+S2+S3 < 4S (SUS,S1+S2+S3) Case 1

6) Pl+Pb+Q < SPS (OPE,Inside) Case 2

```
7) Pl+Pb+Q < SPS (OPE,Outside) Case 2

8) Pl+Pb+Q+F < 2Sa (EXP,Inside) Case 2

9) Pl+Pb+Q+F < 2Sa (EXP,Outside) Case 2

10) Membrane < User (OPE,Membrane) Case 2

11) Bending < User (OPE,Bending) Case 2

12) Pl+Pb+Q+F < 2Sa (SIF,Outside) Case 3

13) Pl+Pb+Q+F < 2Sa (SIF,Outside) Case 4

14) Pl+Pb+Q+F < 2Sa (SIF,Outside) Case 5

15) Pl+Pb+Q+F < 2Sa (SIF,Outside) Case 6

16) Pl+Pb+Q+F < 2Sa (SIF,Outside) Case 7
```

Table of Contents

```
Stress Results - Notes
FEPipe Version 15.0          Jobname: NOZZLE                $P
Released Jan. 2021            3:21pm   DEC 23,2024


Stress Results - Notes


- Results  in  this  analysis  were  generated using the finite
  element solution method.

- Using 2019 ASME Section VIII Division 2

- Use Polished Bar fatigue curve.

- Ratio between Operating and Design Pressure =   1.000000
  Range cases use operating pressure. Primary cases
  use design pressure.

- Assume free end displacements of attached pipe
  (e.g. thermal loads) are secondary loads.

- Primary bending stresses at discontinuities
  are treated like secondary stresses. (Pb=0)

- Use Equivalent Stress (Von Mises).

- TRIAXIAL Stress Guidelines:
  S1+S2+S3 evaluation omitted from operating stress.
  Include S1+S2+S3 evaluation in primary case evaluation.
  Bending stress NOT included for all S1+S2+S3 calculations.

- Use local tensor values for averaged and not averaged stresses.
```

Table of Contents

```
ASME Overstressed Areas
FEPipe Version 15.0          Jobname: NOZZLE                $P
Released Jan. 2021            3:21pm   DEC 23,2024



ASME Overstressed Areas                                $X


            *** NO OVERSTRESSED NODES IN THIS MODEL ***
```

Table of Contents

```
Highest Primary Stress Ratios
FEPipe Version 15.0          Jobname: NOZZLE                $P
Released Jan. 2021            3:21pm   DEC 23,2024



Highest Primary Stress Ratios                          $X


Header Next to Nozzle Weld

       Pl            SPL     Primary Membrane Load Case 1
       20            117     Min Prin. Stress = -2. (13% Neg, 0% NegHi)
      MPa            MPa     Plot Reference:
                             1) Pl < SPL (SUS,Membrane) Case 1
            17%


Branch Next to Header Weld

       Pl            SPL     Primary Membrane Load Case 1
       20            117     Min Prin. Stress = -3. (54% Neg, 47% NegHi)
      MPa            MPa     Plot Reference:
                             1) Pl < SPL (SUS,Membrane) Case 1
            17%


Branch Transition

       Pl            SPL     Primary Membrane Load Case 1
        7            117     Min Prin. Stress = -6. (54% Neg, 39% NegHi)
      MPa            MPa     Plot Reference:
                             1) Pl < SPL (SUS,Membrane) Case 1
             5%
```

```
Header away from Junction

       Pl            SPL     Primary Membrane Load Case 1
        8            117     Min Prin. Stress = -2. ( 9% Neg, 0% NegHi)
      MPa            MPa     Plot Reference:
                             1) Pl < SPL (SUS,Membrane) Case 1
             7%


Branch away from Junction

       Pl            SPL     Primary Membrane Load Case 1
        7            117     Min Prin. Stress = -2. (66% Neg, 51% NegHi)
      MPa            MPa     Plot Reference:
                             1) Pl < SPL (SUS,Membrane) Case 1
             5%
```

Table of Contents

```
Highest Secondary Stress Ratios
FEPipe Version 15.0           Jobname: NOZZLE                $P
Released Jan. 2021             3:21pm   DEC 23,2024



Highest Secondary Stress Ratios                        $X


Header Next to Nozzle Weld

  Pl+Pb+Q            SPS     Primary+Secondary (Inner) Load Case 1
       24            290     Min Prin. Stress = -2. (13% Neg, 0% NegHi)
      MPa            MPa     Plot Reference:
                             3) Pl+Pb+Q < SPS (SUS,Inside) Case 1
             8%

  Pl+Pb+Q            SPS     Primary+Secondary (Inner) Load Case 2
       24            290     Min Prin. Stress = -2. (13% Neg, 0% NegHi)
      MPa            MPa     Plot Reference:
                             6) Pl+Pb+Q < SPS (OPE,Inside) Case 2
             8%


Branch Next to Header Weld

  Pl+Pb+Q            SPS     Primary+Secondary (Inner) Load Case 1
       25            290     Min Prin. Stress = -3. (54% Neg, 47% NegHi)
      MPa            MPa     Plot Reference:
                             3) Pl+Pb+Q < SPS (SUS,Inside) Case 1
             8%

  Pl+Pb+Q            SPS     Primary+Secondary (Inner) Load Case 2
       25            290     Min Prin. Stress = -3. (54% Neg, 47% NegHi)
      MPa            MPa     Plot Reference:
                             6) Pl+Pb+Q < SPS (OPE,Inside) Case 2
             8%
```

```
Branch Transition

  Pl+Pb+Q            SPS     Primary+Secondary (Outer) Load Case 1
       10            290     Min Prin. Stress = -6. (54% Neg, 39% NegHi)
      MPa            MPa     Plot Reference:
                             4) Pl+Pb+Q < SPS (SUS,Outside) Case 1
             3%

  Pl+Pb+Q            SPS     Primary+Secondary (Outer) Load Case 2
       10            290     Min Prin. Stress = -6. (54% Neg, 39% NegHi)
      MPa            MPa     Plot Reference:
                             7) Pl+Pb+Q < SPS (OPE,Outside) Case 2
             3%


Header away from Junction

  Pl+Pb+Q            SPS     Primary+Secondary (Outer) Load Case 1
       13            290     Min Prin. Stress = -2. ( 9% Neg, 0% NegHi)
      MPa            MPa     Plot Reference:
                             4) Pl+Pb+Q < SPS (SUS,Outside) Case 1
             4%

  Pl+Pb+Q            SPS     Primary+Secondary (Outer) Load Case 2
       13            290     Min Prin. Stress = -2. ( 9% Neg, 0% NegHi)
      MPa            MPa     Plot Reference:
                             7) Pl+Pb+Q < SPS (OPE,Outside) Case 2
             4%


Branch away from Junction

  Pl+Pb+Q            SPS     Primary+Secondary (Outer) Load Case 1
       11            290     Min Prin. Stress = -2. (66% Neg, 51% NegHi)
      MPa            MPa     Plot Reference:
                             4) Pl+Pb+Q < SPS (SUS,Outside) Case 1
             3%

  Pl+Pb+Q            SPS     Primary+Secondary (Outer) Load Case 2
       11            290     Min Prin. Stress = -2. (66% Neg, 51% NegHi)
      MPa            MPa     Plot Reference:
                             7) Pl+Pb+Q < SPS (OPE,Outside) Case 2
             3%
```

Table of Contents

```
Highest Fatigue Stress Ratios
FEPipe Version 15.0          Jobname: NOZZLE                $P
Released Jan. 2021            3:21pm   DEC 23,2024


Highest Fatigue Stress Ratios                            $X
```

```
Header Next to Nozzle Weld

Pl+Pb+Q+F    Damage Ratio    Primary+Secondary+Peak (Inner) Load Case 2
       16     0.000 Life     Stress Concentration Factor = 1.350
      MPa     0.039 Stress   Strain Concentration Factor = 1.000
                             Cycles Allowed for this Stress = 1.0000E11
Allowable                    "B31" Fatigue Stress Allowable = 241.2
    408.0                    Markl Fatigue Stress Allowable = 329.8
      MPa                    WRC 474 Mean Cycles to Failure = 5.4938E8
                             WRC 474 99% Probability Cycles = 1.2763E8
       3%                    WRC 474 95% Probability Cycles = 1.7719E8
                             BS5500 Allowed Cycles(Curve F) = 1.8993E8
                             Membrane-to-Bending Ratio = 2.115
                             Bending-to-PL+PB+Q Ratio = 0.321
                             Plot Reference:
                             8) Pl+Pb+Q+F < 2Sa (EXP,Inside) Case 2


Branch Next to Header Weld

Pl+Pb+Q+F    Damage Ratio    Primary+Secondary+Peak (Inner) Load Case 2
       17     0.000 Life     Stress Concentration Factor = 1.350
      MPa     0.041 Stress   Strain Concentration Factor = 1.000
                             Cycles Allowed for this Stress = 1.0000E11
Allowable                    "B31" Fatigue Stress Allowable = 241.2
    408.0                    Markl Fatigue Stress Allowable = 329.8
      MPa                    WRC 474 Mean Cycles to Failure = 5.2618E8
                             WRC 474 99% Probability Cycles = 1.2224E8
       4%                    WRC 474 95% Probability Cycles = 1.6971E8
                             BS5500 Allowed Cycles(Curve F) = 1.5037E8
                             Membrane-to-Bending Ratio = 1.726
                             Bending-to-PL+PB+Q Ratio = 0.367
                             Plot Reference:
                             8) Pl+Pb+Q+F < 2Sa (EXP,Inside) Case 2


Branch Transition

Pl+Pb+Q+F    Damage Ratio    Primary+Secondary+Peak (Outer) Load Case 2
        5     0.000 Life     Stress Concentration Factor = 1.000
      MPa     0.012 Stress   Strain Concentration Factor = 1.000
                             Cycles Allowed for this Stress = 1.0000E11
Allowable                    "B31" Fatigue Stress Allowable = 241.2
    408.0                    Markl Fatigue Stress Allowable = 329.8
      MPa                    WRC 474 Mean Cycles to Failure = 1.0932E10
                             WRC 474 99% Probability Cycles = 2.5395E9
       1%                    WRC 474 95% Probability Cycles = 3.5258E9
                             BS5500 Allowed Cycles(Curve F) = 1.6318E10
                             Membrane-to-Bending Ratio = 0.319
                             Bending-to-PL+PB+Q Ratio = 0.758
                             Plot Reference:
                             9) Pl+Pb+Q+F < 2Sa (EXP,Outside) Case 2


Header away from Junction

Pl+Pb+Q+F    Damage Ratio    Primary+Secondary+Peak (Outer) Load Case 2
        6     0.000 Life     Stress Concentration Factor = 1.000
      MPa     0.015 Stress   Strain Concentration Factor = 1.000
                             Cycles Allowed for this Stress = 1.0000E11
Allowable                    "B31" Fatigue Stress Allowable = 241.2
    408.0                    Markl Fatigue Stress Allowable = 329.8
```

```
      MPa                    WRC 474 Mean Cycles to Failure = 4.2337E9
                             WRC 474 99% Probability Cycles = 9.8354E8
       1%                    WRC 474 95% Probability Cycles = 1.3655E9
                             BS5500 Allowed Cycles(Curve F) = 4.6620E9
                             Membrane-to-Bending Ratio = 0.700
                             Bending-to-PL+PB+Q Ratio = 0.588
                             Plot Reference:
                             9) Pl+Pb+Q+F < 2Sa (EXP,Outside) Case 2


Branch away from Junction

Pl+Pb+Q+F    Damage Ratio    Primary+Secondary+Peak (Outer) Load Case 2
        5     0.000 Life     Stress Concentration Factor = 1.000
      MPa     0.013 Stress   Strain Concentration Factor = 1.000
                             Cycles Allowed for this Stress = 1.0000E11
Allowable                    "B31" Fatigue Stress Allowable = 241.2
    408.0                    Markl Fatigue Stress Allowable = 329.8
      MPa                    WRC 474 Mean Cycles to Failure = 7.0561E9
                             WRC 474 99% Probability Cycles = 1.6392E9
       1%                    WRC 474 95% Probability Cycles = 2.2758E9
                             BS5500 Allowed Cycles(Curve F) = 9.7664E9
                             Membrane-to-Bending Ratio = 1.582
                             Bending-to-PL+PB+Q Ratio = 0.387
                             Plot Reference:
                             9) Pl+Pb+Q+F < 2Sa (EXP,Outside) Case 2
```

Table of Contents

```
Highest Stress Ratios Per Region
FEPipe Version 15.0          Jobname: NOZZLE                $P
Released Jan. 2021            3:21pm   DEC 23,2024



Highest Stress Ratios Per Region                       $X


Header Next to Nozzle Weld

       Pl            SPL     Primary Membrane Load Case 1
       20            117     Min Prin. Stress = -2. (13% Neg, 0% NegHi)
      MPa            MPa     Plot Reference:
                             1) Pl < SPL (SUS,Membrane) Case 1
            17%

       Qb            SPS     Primary Bending Load Case 1
       10            290     Min Prin. Stress = -2. (13% Neg, 0% NegHi)
      MPa            MPa     Plot Reference:
                             2) Qb < SPS (SUS,Bending) Case 1
             3%

  Pl+Pb+Q            SPS     Primary+Secondary (Inner) Load Case 1
       24            290     Min Prin. Stress = -2. (13% Neg, 0% NegHi)
      MPa            MPa     Plot Reference:
                             3) Pl+Pb+Q < SPS (SUS,Inside) Case 1
             8%
```

```
 Pl+Pb+Q            SPS     Primary+Secondary (Outer) Load Case 1
      20            290     Min Prin. Stress = -2. (13% Neg, 0% NegHi)
     MPa            MPa     Plot Reference:
                            4) Pl+Pb+Q < SPS (SUS,Outside) Case 1
            6%

S1+S2+S3             4S     Part 5 (5.3.2) Load Case 1
      24            312     Min Prin. Stress = -2. (13% Neg, 0% NegHi)
     MPa            MPa     Plot Reference:
                            5) S1+S2+S3 < 4S (SUS,S1+S2+S3) Case 1
            7%

 Pl+Pb+Q            SPS     Primary+Secondary (Inner) Load Case 2
      24            290     Min Prin. Stress = -2. (13% Neg, 0% NegHi)
     MPa            MPa     Plot Reference:
                            6) Pl+Pb+Q < SPS (OPE,Inside) Case 2
            8%

 Pl+Pb+Q            SPS     Primary+Secondary (Outer) Load Case 2
      20            290     Min Prin. Stress = -2. (13% Neg, 0% NegHi)
     MPa            MPa     Plot Reference:
                            7) Pl+Pb+Q < SPS (OPE,Outside) Case 2
            6%

Pl+Pb+Q+F    Damage Ratio   Primary+Secondary+Peak (Inner) Load Case 2
      16     0.000 Life     Stress Concentration Factor = 1.350
     MPa     0.039 Stress   Strain Concentration Factor = 1.000
                            Cycles Allowed for this Stress = 1.0000E11
Allowable                   "B31" Fatigue Stress Allowable = 241.2
    408.0                   Markl Fatigue Stress Allowable = 329.8
     MPa                    WRC 474 Mean Cycles to Failure = 5.4938E8
                            WRC 474 99% Probability Cycles = 1.2763E8
      3%                    WRC 474 95% Probability Cycles = 1.7719E8
                            BS5500 Allowed Cycles(Curve F) = 1.8993E8
                            Membrane-to-Bending Ratio = 2.115
                            Bending-to-PL+PB+Q Ratio = 0.321
                            Plot Reference:
                            8) Pl+Pb+Q+F < 2Sa (EXP,Inside) Case 2

Pl+Pb+Q+F    Damage Ratio   Primary+Secondary+Peak (Outer) Load Case 2
      14     0.000 Life     Stress Concentration Factor = 1.350
     MPa     0.033 Stress   Strain Concentration Factor = 1.000
                            Cycles Allowed for this Stress = 1.0000E11
Allowable                   "B31" Fatigue Stress Allowable = 241.2
    408.0                   Markl Fatigue Stress Allowable = 329.8
     MPa                    WRC 474 Mean Cycles to Failure = 9.4413E8
                            WRC 474 99% Probability Cycles = 2.1933E8
      3%                    WRC 474 95% Probability Cycles = 3.0451E8
                            BS5500 Allowed Cycles(Curve F) = 4.4269E8
                            Membrane-to-Bending Ratio = 2.084
                            Bending-to-PL+PB+Q Ratio = 0.324
                            Plot Reference:
                            9) Pl+Pb+Q+F < 2Sa (EXP,Outside) Case 2

 Membrane           User    Component Evaluation Load Case 2
      20            290     Min Prin. Stress = -2. (13% Neg, 0% NegHi)
     MPa            MPa     Plot Reference:
                            10) Membrane < User (OPE,Membrane) Case 2
            6%

  Bending           User    Component Evaluation Load Case 2
```

```
        10            290     Min Prin. Stress = -2. (13% Neg, 0% NegHi)
       MPa            MPa     Plot Reference:
                              11) Bending < User (OPE,Bending) Case 2
              3%


Branch Next to Header Weld

        Pl            SPL     Primary Membrane Load Case 1
        20            117     Min Prin. Stress = -3. (54% Neg, 47% NegHi)
       MPa            MPa     Plot Reference:
                              1) Pl < SPL (SUS,Membrane) Case 1
             17%

        Qb            SPS     Primary Bending Load Case 1
        12            290     Min Prin. Stress = -3. (54% Neg, 47% NegHi)
       MPa            MPa     Plot Reference:
                              2) Qb < SPS (SUS,Bending) Case 1
              4%

   Pl+Pb+Q            SPS     Primary+Secondary (Inner) Load Case 1
        25            290     Min Prin. Stress = -3. (54% Neg, 47% NegHi)
       MPa            MPa     Plot Reference:
                              3) Pl+Pb+Q < SPS (SUS,Inside) Case 1
              8%

   Pl+Pb+Q            SPS     Primary+Secondary (Outer) Load Case 1
        21            290     Min Prin. Stress = -3. (54% Neg, 47% NegHi)
       MPa            MPa     Plot Reference:
                              4) Pl+Pb+Q < SPS (SUS,Outside) Case 1
              7%

  S1+S2+S3             4S     Part 5 (5.3.2) Load Case 1
        24            312     Min Prin. Stress = -3. (54% Neg, 47% NegHi)
       MPa            MPa     Plot Reference:
                              5) S1+S2+S3 < 4S (SUS,S1+S2+S3) Case 1
              7%

   Pl+Pb+Q            SPS     Primary+Secondary (Inner) Load Case 2
        25            290     Min Prin. Stress = -3. (54% Neg, 47% NegHi)
       MPa            MPa     Plot Reference:
                              6) Pl+Pb+Q < SPS (OPE,Inside) Case 2
              8%

   Pl+Pb+Q            SPS     Primary+Secondary (Outer) Load Case 2
        21            290     Min Prin. Stress = -3. (54% Neg, 47% NegHi)
       MPa            MPa     Plot Reference:
                              7) Pl+Pb+Q < SPS (OPE,Outside) Case 2
              7%

Pl+Pb+Q+F     Damage Ratio    Primary+Secondary+Peak (Inner) Load Case 2
        17     0.000 Life     Stress Concentration Factor = 1.350
       MPa     0.041 Stress   Strain Concentration Factor = 1.000
                              Cycles Allowed for this Stress = 1.0000E11
Allowable                     "B31" Fatigue Stress Allowable = 241.2
     408.0                    Markl Fatigue Stress Allowable = 329.8
       MPa                    WRC 474 Mean Cycles to Failure = 5.2618E8
                              WRC 474 99% Probability Cycles = 1.2224E8
        4%                    WRC 474 95% Probability Cycles = 1.6971E8
                              BS5500 Allowed Cycles(Curve F) = 1.5037E8
                              Membrane-to-Bending Ratio = 1.726
                              Bending-to-PL+PB+Q Ratio = 0.367
```

```
                                Plot Reference:
                                8) Pl+Pb+Q+F < 2Sa (EXP,Inside) Case 2

Pl+Pb+Q+F    Damage Ratio       Primary+Secondary+Peak (Outer) Load Case 2
      14      0.000 Life        Stress Concentration Factor = 1.350
     MPa      0.034 Stress      Strain Concentration Factor = 1.000
                                Cycles Allowed for this Stress = 1.0000E11
Allowable                       "B31" Fatigue Stress Allowable = 241.2
    408.0                       Markl Fatigue Stress Allowable = 329.8
     MPa                        WRC 474 Mean Cycles to Failure = 9.3874E8
                                WRC 474 99% Probability Cycles = 2.1808E8
      3%                        WRC 474 95% Probability Cycles = 3.0277E8
                                BS5500 Allowed Cycles(Curve F) = 3.6828E8
                                Membrane-to-Bending Ratio = 1.726
                                Bending-to-PL+PB+Q Ratio = 0.367
                                Plot Reference:
                                9) Pl+Pb+Q+F < 2Sa (EXP,Outside) Case 2

 Membrane           User        Component Evaluation Load Case 2
       20            290        Min Prin. Stress = -3. (54% Neg, 47% NegHi)
      MPa            MPa        Plot Reference:
                                10) Membrane < User (OPE,Membrane) Case 2
             6%

  Bending           User        Component Evaluation Load Case 2
       12            290        Min Prin. Stress = -3. (54% Neg, 47% NegHi)
      MPa            MPa        Plot Reference:
                                11) Bending < User (OPE,Bending) Case 2
             4%


Branch Transition

       Pl            SPL        Primary Membrane Load Case 1
        7            117        Min Prin. Stress = -6. (54% Neg, 39% NegHi)
      MPa            MPa        Plot Reference:
                                1) Pl < SPL (SUS,Membrane) Case 1
             5%

       Qb            SPS        Primary Bending Load Case 1
        8            290        Min Prin. Stress = -6. (54% Neg, 39% NegHi)
      MPa            MPa        Plot Reference:
                                2) Qb < SPS (SUS,Bending) Case 1
             2%

  Pl+Pb+Q            SPS        Primary+Secondary (Inner) Load Case 1
        9            290        Min Prin. Stress = -6. (54% Neg, 39% NegHi)
      MPa            MPa        Plot Reference:
                                3) Pl+Pb+Q < SPS (SUS,Inside) Case 1
             3%

  Pl+Pb+Q            SPS        Primary+Secondary (Outer) Load Case 1
       10            290        Min Prin. Stress = -6. (54% Neg, 39% NegHi)
      MPa            MPa        Plot Reference:
                                4) Pl+Pb+Q < SPS (SUS,Outside) Case 1
             3%

 S1+S2+S3             4S        Part 5 (5.3.2) Load Case 1
       12            312        Min Prin. Stress = -6. (54% Neg, 39% NegHi)
      MPa            MPa        Plot Reference:
                                5) S1+S2+S3 < 4S (SUS,S1+S2+S3) Case 1
             3%
```

```
  Pl+Pb+Q            SPS     Primary+Secondary (Inner) Load Case 2
        9            290     Min Prin. Stress = -6. (54% Neg, 39% NegHi)
      MPa            MPa     Plot Reference:
                             6) Pl+Pb+Q < SPS (OPE,Inside) Case 2
             3%

  Pl+Pb+Q            SPS     Primary+Secondary (Outer) Load Case 2
       10            290     Min Prin. Stress = -6. (54% Neg, 39% NegHi)
      MPa            MPa     Plot Reference:
                             7) Pl+Pb+Q < SPS (OPE,Outside) Case 2
             3%

Pl+Pb+Q+F    Damage Ratio    Primary+Secondary+Peak (Inner) Load Case 2
        5     0.000 Life     Stress Concentration Factor = 1.000
      MPa     0.011 Stress   Strain Concentration Factor = 1.000
                             Cycles Allowed for this Stress = 1.0000E11
Allowable                    "B31" Fatigue Stress Allowable = 241.2
    408.0                    Markl Fatigue Stress Allowable = 329.8
      MPa                    WRC 474 Mean Cycles to Failure = 1.1224E10
                             WRC 474 99% Probability Cycles = 2.6074E9
       1%                    WRC 474 95% Probability Cycles = 3.6201E9
                             BS5500 Allowed Cycles(Curve F) = 2.0801E10
                             Membrane-to-Bending Ratio = 2.069
                             Bending-to-PL+PB+Q Ratio = 0.326
                             Plot Reference:
                             8) Pl+Pb+Q+F < 2Sa (EXP,Inside) Case 2

Pl+Pb+Q+F    Damage Ratio    Primary+Secondary+Peak (Outer) Load Case 2
        5     0.000 Life     Stress Concentration Factor = 1.000
      MPa     0.012 Stress   Strain Concentration Factor = 1.000
                             Cycles Allowed for this Stress = 1.0000E11
Allowable                    "B31" Fatigue Stress Allowable = 241.2
    408.0                    Markl Fatigue Stress Allowable = 329.8
      MPa                    WRC 474 Mean Cycles to Failure = 1.0932E10
                             WRC 474 99% Probability Cycles = 2.5395E9
       1%                    WRC 474 95% Probability Cycles = 3.5258E9
                             BS5500 Allowed Cycles(Curve F) = 1.6318E10
                             Membrane-to-Bending Ratio = 0.319
                             Bending-to-PL+PB+Q Ratio = 0.758
                             Plot Reference:
                             9) Pl+Pb+Q+F < 2Sa (EXP,Outside) Case 2

 Membrane           User     Component Evaluation Load Case 2
        7            290     Min Prin. Stress = -6. (54% Neg, 39% NegHi)
      MPa            MPa     Plot Reference:
                             10) Membrane < User (OPE,Membrane) Case 2
             2%

  Bending           User     Component Evaluation Load Case 2
        8            290     Min Prin. Stress = -6. (54% Neg, 39% NegHi)
      MPa            MPa     Plot Reference:
                             11) Bending < User (OPE,Bending) Case 2
             2%


Header away from Junction

       Pl            SPL     Primary Membrane Load Case 1
        8            117     Min Prin. Stress = -2. ( 9% Neg, 0% NegHi)
      MPa            MPa     Plot Reference:
                             1) Pl < SPL (SUS,Membrane) Case 1
```

```
                7%

        Qb              SPS     Primary Bending Load Case 1
         7              290     Min Prin. Stress = -2. ( 9% Neg, 0% NegHi)
       MPa              MPa     Plot Reference:
                                2) Qb < SPS (SUS,Bending) Case 1
                2%

   Pl+Pb+Q              SPS     Primary+Secondary (Inner) Load Case 1
        11              290     Min Prin. Stress = -2. ( 9% Neg, 0% NegHi)
       MPa              MPa     Plot Reference:
                                3) Pl+Pb+Q < SPS (SUS,Inside) Case 1
                3%

   Pl+Pb+Q              SPS     Primary+Secondary (Outer) Load Case 1
        13              290     Min Prin. Stress = -2. ( 9% Neg, 0% NegHi)
       MPa              MPa     Plot Reference:
                                4) Pl+Pb+Q < SPS (SUS,Outside) Case 1
                4%

 S1+S2+S3               4S      Part 5 (5.3.2) Load Case 1
        14              312     Min Prin. Stress = -2. ( 9% Neg, 0% NegHi)
       MPa              MPa     Plot Reference:
                                5) S1+S2+S3 < 4S (SUS,S1+S2+S3) Case 1
                4%

   Pl+Pb+Q              SPS     Primary+Secondary (Inner) Load Case 2
        11              290     Min Prin. Stress = -2. ( 9% Neg, 0% NegHi)
       MPa              MPa     Plot Reference:
                                6) Pl+Pb+Q < SPS (OPE,Inside) Case 2
                3%

   Pl+Pb+Q              SPS     Primary+Secondary (Outer) Load Case 2
        13              290     Min Prin. Stress = -2. ( 9% Neg, 0% NegHi)
       MPa              MPa     Plot Reference:
                                7) Pl+Pb+Q < SPS (OPE,Outside) Case 2
                4%

 Pl+Pb+Q+F    Damage Ratio      Primary+Secondary+Peak (Inner) Load Case 2
         5     0.000 Life       Stress Concentration Factor = 1.000
       MPa     0.013 Stress     Strain Concentration Factor = 1.000
                                Cycles Allowed for this Stress = 1.0000E11
 Allowable                      "B31" Fatigue Stress Allowable = 241.2
     408.0                      Markl Fatigue Stress Allowable = 329.8
       MPa                      WRC 474 Mean Cycles to Failure = 6.7315E9
                                WRC 474 99% Probability Cycles = 1.5638E9
        1%                      WRC 474 95% Probability Cycles = 2.1711E9
                                BS5500 Allowed Cycles(Curve F) = 1.0489E10
                                Membrane-to-Bending Ratio = 1.919
                                Bending-to-PL+PB+Q Ratio = 0.343
                                Plot Reference:
                                8) Pl+Pb+Q+F < 2Sa (EXP,Inside) Case 2

 Pl+Pb+Q+F    Damage Ratio      Primary+Secondary+Peak (Outer) Load Case 2
         6     0.000 Life       Stress Concentration Factor = 1.000
       MPa     0.015 Stress     Strain Concentration Factor = 1.000
                                Cycles Allowed for this Stress = 1.0000E11
 Allowable                      "B31" Fatigue Stress Allowable = 241.2
     408.0                      Markl Fatigue Stress Allowable = 329.8
       MPa                      WRC 474 Mean Cycles to Failure = 4.2337E9
                                WRC 474 99% Probability Cycles = 9.8354E8
        1%                      WRC 474 95% Probability Cycles = 1.3655E9
```

```
                                BS5500 Allowed Cycles(Curve F) = 4.6620E9
                                Membrane-to-Bending Ratio = 0.700
                                Bending-to-PL+PB+Q Ratio = 0.588
                                Plot Reference:
                                9) Pl+Pb+Q+F < 2Sa (EXP,Outside) Case 2

 Membrane            User       Component Evaluation Load Case 2
        8             290       Min Prin. Stress = -2. ( 9% Neg, 0% NegHi)
      MPa             MPa       Plot Reference:
                                10) Membrane < User (OPE,Membrane) Case 2
             2%

  Bending            User       Component Evaluation Load Case 2
        7             290       Min Prin. Stress = -2. ( 9% Neg, 0% NegHi)
      MPa             MPa       Plot Reference:
                                11) Bending < User (OPE,Bending) Case 2
             2%


Branch away from Junction

       Pl             SPL       Primary Membrane Load Case 1
        7             117       Min Prin. Stress = -2. (66% Neg, 51% NegHi)
      MPa             MPa       Plot Reference:
                                1) Pl < SPL (SUS,Membrane) Case 1
             5%

       Qb            SPS        Primary Bending Load Case 1
        4             290       Min Prin. Stress = -2. (66% Neg, 51% NegHi)
      MPa             MPa       Plot Reference:
                                2) Qb < SPS (SUS,Bending) Case 1
             1%

   Pl+Pb+Q            SPS       Primary+Secondary (Inner) Load Case 1
        9             290       Min Prin. Stress = -2. (66% Neg, 51% NegHi)
      MPa             MPa       Plot Reference:
                                3) Pl+Pb+Q < SPS (SUS,Inside) Case 1
             3%

   Pl+Pb+Q            SPS       Primary+Secondary (Outer) Load Case 1
       11             290       Min Prin. Stress = -2. (66% Neg, 51% NegHi)
      MPa             MPa       Plot Reference:
                                4) Pl+Pb+Q < SPS (SUS,Outside) Case 1
             3%

 S1+S2+S3             4S        Part 5 (5.3.2) Load Case 1
       11             312       Min Prin. Stress = -2. (66% Neg, 51% NegHi)
      MPa             MPa       Plot Reference:
                                5) S1+S2+S3 < 4S (SUS,S1+S2+S3) Case 1
             3%

   Pl+Pb+Q            SPS       Primary+Secondary (Inner) Load Case 2
        9             290       Min Prin. Stress = -2. (66% Neg, 51% NegHi)
      MPa             MPa       Plot Reference:
                                6) Pl+Pb+Q < SPS (OPE,Inside) Case 2
             3%

   Pl+Pb+Q            SPS       Primary+Secondary (Outer) Load Case 2
       11             290       Min Prin. Stress = -2. (66% Neg, 51% NegHi)
      MPa             MPa       Plot Reference:
                                7) Pl+Pb+Q < SPS (OPE,Outside) Case 2
             3%
```

```
Pl+Pb+Q+F    Damage Ratio    Primary+Secondary+Peak (Inner) Load Case 2
        4     0.000 Life     Stress Concentration Factor = 1.000
      MPa     0.011 Stress   Strain Concentration Factor = 1.000
                             Cycles Allowed for this Stress = 1.0000E11
Allowable                    "B31" Fatigue Stress Allowable = 241.2
    408.0                    Markl Fatigue Stress Allowable = 329.8
      MPa                    WRC 474 Mean Cycles to Failure = 1.2792E10
                             WRC 474 99% Probability Cycles = 2.9717E9
       1%                    WRC 474 95% Probability Cycles = 4.1258E9
                             BS5500 Allowed Cycles(Curve F) = 2.5352E10
                             Membrane-to-Bending Ratio = 1.891
                             Bending-to-PL+PB+Q Ratio = 0.346
                             Plot Reference:
                             8) Pl+Pb+Q+F < 2Sa (EXP,Inside) Case 2

Pl+Pb+Q+F    Damage Ratio    Primary+Secondary+Peak (Outer) Load Case 2
        5     0.000 Life     Stress Concentration Factor = 1.000
      MPa     0.013 Stress   Strain Concentration Factor = 1.000
                             Cycles Allowed for this Stress = 1.0000E11
Allowable                    "B31" Fatigue Stress Allowable = 241.2
    408.0                    Markl Fatigue Stress Allowable = 329.8
      MPa                    WRC 474 Mean Cycles to Failure = 7.0561E9
                             WRC 474 99% Probability Cycles = 1.6392E9
       1%                    WRC 474 95% Probability Cycles = 2.2758E9
                             BS5500 Allowed Cycles(Curve F) = 9.7664E9
                             Membrane-to-Bending Ratio = 1.582
                             Bending-to-PL+PB+Q Ratio = 0.387
                             Plot Reference:
                             9) Pl+Pb+Q+F < 2Sa (EXP,Outside) Case 2

 Membrane            User    Component Evaluation Load Case 2
        7             290    Min Prin. Stress = -2. (66% Neg, 51% NegHi)
      MPa             MPa    Plot Reference:
                             10) Membrane < User (OPE,Membrane) Case 2
             2%

  Bending            User    Component Evaluation Load Case 2
        4             290    Min Prin. Stress = -2. (66% Neg, 51% NegHi)
      MPa             MPa    Plot Reference:
                             11) Bending < User (OPE,Bending) Case 2
             1%
```

Table of Contents

```
Stress Intensification Factors
FEPipe Version 15.0          Jobname: NOZZLE                $P
Released Jan. 2021            3:21pm   DEC 23,2024



Stress Intensification Factors                          $X


Branch/Nozzle Sif Summary

                  Peak      Primary    Secondary      SSI
```

```
Axial    :        8.778       6.502      13.004       1.648
Inplane  :        3.044       3.054       4.510       1.449
Outplane:         8.426       6.242      12.483       1.633
Torsion  :        2.291       2.620       3.394       1.514
Pressure:         2.851       3.371       4.224       1.272

The above stress intensification factors are to be used
in a beam-type analysis of the piping system.  Inplane,
Outplane and Torsional sif's should be used with the
matching branch pipe whose diameter and thickness is given
below.  The axial sif should be used to intensify the
axial stress in the branch pipe calculated by F/A.  The
pressure sif should be used to intensify the nominal
pressure stress in the PARENT or HEADER, calculated
from PDo/2T. B31 calculations use mean diameters and
Section VIII calculations use outside diameters. SSIs are
based on peak stress factors and correlated test results.

Pipe OD :       219.100  mm.
Pipe Thk:         7.100  mm.
Z approx:    250622.234  cu.mm.
Z exact :    242772.750  cu.mm.

  (SSI = SIF^x)         Axial   Inpl    Outpl   Tors    Pres
SIF/SSI Exponents:      0.862   1.003   0.859   1.162   1.160

SIF/SSI exponent based on relationship between primary and
peak stress factors from the finite element analysis.

B31.3 Branch Pressure i-factor =        6.436
      Header Pressure i-factor =        5.876

The B31.3 pressure i-factors should be used with with
F/A, where F is the axial force due to pressure, and
A is the area of the pipe wall. This is equivalent to
finding the pressure stress from (ip)(PD/4T).

B31.3   (Branch)
Peak Stress Sif ....    0.000         Axial
                        4.031         Inplane
                        5.082         Outplane
                        1.000         Torsional
B31.1  (Branch)
Peak Stress Sif ....    0.000         Axial
                        5.082         Inplane
                        5.082         Outplane
                        5.082         Torsional
WRC 330  (Branch)
Peak Stress Sif ....    0.000         Axial
                        4.119         Inplane
                        4.949         Outplane
                        3.961         Torsional
```

Table of Contents

```
Allowable Loads
FEPipe Version 15.0          Jobname: NOZZLE                $P
Released Jan. 2021            3:21pm   DEC 23,2024
```

Allowable Loads $X

SECONDARY Load Type (Range):	Maximum Individual Occuring	Conservative Simultaneous Occuring	Realistic Simultaneous Occuring
Axial Force (N)	105275.	32567.	48851.
Inplane Moment (mm. N)	15582681.	3408661.	7230862.
Outplane Moment (mm. N)	5630214.	1231591.	2612600.
Torsional Moment (mm. N)	20706634.	6308276.	9462414.
Pressure (MPa)	4.07	0.35	0.35

PRIMARY Load Type:	Maximum Individual Occuring	Conservative Simultaneous Occuring	Realistic Simultaneous Occuring
Axial Force (N)	84983.	23512.	35268.
Inplane Moment (mm. N)	9289647.	1817064.	3854575.
Outplane Moment (mm. N)	4545012.	889149.	1886169.
Torsional Moment (mm. N)	10828328.	2995349.	4493024.
Pressure (MPa)	2.06	0.35	0.35

NOTES:

1) Maximum Individual Occuring Loads are the maximum allowed values of the respective loads if all other load components are zero, i.e. the listed axial force may be applied if the inplane, outplane and torsional moments, and the pressure are zero.

2) The Conservative Allowable Simultaneous loads are the maximum loads that can be applied simultaneously. A conservative stress combination equation is used that typically produces stresses within 50-70% of the allowable stress.

3) The Realistic Allowable Simultaneous loads are the maximum loads that can be applied simultaneously. A more realistic stress combination equation is used based on experience at Paulin Research. Stresses are typically produced within 80-105% of the allowable.

4) Secondary allowable loads are limits for expansion and operating piping loads.

5) Primary allowable loads are limits for weight, primary and sustained type piping loads.

6) High D/T low pressure systems may be subject to instability and should be checked when compressive stresses are present.

Table of Contents

Compressive Stress Summary

```
FEPipe Version 15.0          Jobname: NOZZLE                $P
Released Jan. 2021            3:21pm   DEC 23,2024


Compressive Stress Summary (MPa)                        $X

Nomenclature:
-------------
Min Stress       - Compressive Membrane and Bending Stress
Pts in Region    - No. of nodes in the model region
>5% Compression  - 5% or more of Compressive Stress Limit
>50% Compression - 50% or more of Compressive Stress Limit

Compressive Stress Limit = -0.55 Min(Sy, kEt/R), Section
slenderness ratio (elastic buckling) not considered.
                                          >5%    >50%
                         Min        Pts   Compression
 #  Load Type  Case    Stress    in Region  and Bending    Region
--  ---------  ----    ------   ----------  ------------  ----------------
 1  SUSTAINED    1       -2.        800       13%     0%  Header Next to Nozzle Weld
 2  OPERATING    2       -2.        800       13%     0%  Header Next to Nozzle Weld
 3  EXPANSION    2       -2.        800       13%     0%  Header Next to Nozzle Weld
 4  OPERATING    2       -2.        800       13%     0%  Header Next to Nozzle Weld
 5  SUSTAINED    1       -2.       1760        9%     0%  Header away from Junction

 6  OPERATING    2       -2.       1760        9%     0%  Header away from Junction
 7  EXPANSION    2       -2.       1760        9%     0%  Header away from Junction
 8  OPERATING    2       -2.       1760        9%     0%  Header away from Junction
 9  SUSTAINED    1       -3.       1240       54%    47%  Branch Next to Header Weld
10  OPERATING    2       -3.       1240       54%    47%  Branch Next to Header Weld

11  EXPANSION    2       -3.       1240       54%    47%  Branch Next to Header Weld
12  OPERATING    2       -3.       1240       54%    47%  Branch Next to Header Weld
13  SUSTAINED    1       -2.        520       66%    51%  Branch away from Junction
14  OPERATING    2       -2.        520       66%    51%  Branch away from Junction
15  EXPANSION    2       -2.        520       66%    51%  Branch away from Junction

16  OPERATING    2       -2.        520       66%    51%  Branch away from Junction
17  SUSTAINED    1       -6.       1120       54%    39%  Branch Transition
18  OPERATING    2       -6.       1120       54%    39%  Branch Transition
19  EXPANSION    2       -6.       1120       54%    39%  Branch Transition
20  OPERATING    2       -6.       1120       54%    39%  Branch Transition
```

Table of Contents

```
Flexibilities
FEPipe Version 15.0          Jobname: NOZZLE                $P
Released Jan. 2021            3:21pm   DEC 23,2024


Flexibilities                                           $X

  The following stiffnesses should be used in a piping,
```

```
"beam-type" analysis of the intersection.  The stiff-
nesses should be inserted at the surface of the
branch/header or nozzle/vessel junction.  The general
characteristics used for the branch pipe should be:

Outside Diameter =  219.100  mm.
Wall Thickness   =    7.100  mm.

Axial Translational Stiffness   =        494811.   N /mm.
Inplane Rotational Stiffness    =      95480952.  mm. N /deg
Outplane Rotational Stiffness   =      33726648.  mm. N /deg
Torsional Rotational Stiffness  =     123348200.  mm. N /deg


Estimated Radial Shell Displacement due to Allowable Loads
SECONDARY:
Axial (mm.) =  0.213  In-Plane (mm.) =  0.302  Out-Plane (mm.) =  0.309

PRIMARY
Axial (mm.) =  0.172  In-Plane (mm.) =  0.180  Out-Plane (mm.) =  0.249

Secondary Conservative Displacement =  0.199 mm.
Secondary Realistic    Displacement =  0.382 mm.

Primary Conservative Displacement =  0.131 mm.
Primary Realistic Displacement    =  0.249 mm.



Intersection Flexibility Factors for Branch/Nozzle
:

Find axial stiffness: K = 3EI/(kd)^3   N /mm.
Find bending and torsional stiffnesses: K = EI/(kd)  mm. N per radian.
The EI product is   0.51862E+13    N mm.^2
The value of (d) to use is: 212.000  mm..
The resulting bending stiffness is in units of force x length per radian.

Axial Flexibility Factor     (k) =     1.489
Inplane Flexibility Factor   (k) =     4.472
Outplane Flexibility Factor  (k) =    12.659
Torsional Flexibility Factor (k) =     3.461
```

Table of Contents

Finite Element Model

- Finite Element Model
- 1) Pl < SPL (SUS Membrane) Case 1
- 2) Qb < SPS (SUS Bending) Case 1
- 3) Pl+Pb+Q < SPS (SUS Inside) Case 1
- 4) Pl+Pb+Q < SPS (SUS Outside) Case 1
- 5) S1+S2+S3 < 4S (SUS S1+S2+S3) Case 1
- 6) Pl+Pb+Q < SPS (OPE Inside) Case 2
- 7) Pl+Pb+Q < SPS (OPE Outside) Case 2
- 8) Pl+Pb+Q+F < 2Sa (EXP Inside) Case 2
- 9) Pl+Pb+Q+F < 2Sa (EXP Outside) Case 2

- 10) Membrane < User (OPE Membrane) Case 2
- 11) Bending < User (OPE Bending) Case 2
- 12) Pl+Pb+Q+F < 2Sa (SIF Outside) Case 3
- 13) Pl+Pb+Q+F < 2Sa (SIF Outside) Case 4
- 14) Pl+Pb+Q+F < 2Sa (SIF Outside) Case 5
- 15) Pl+Pb+Q+F < 2Sa (SIF Outside) Case 6
- 16) Pl+Pb+Q+F < 2Sa (SIF Outside) Case 7
-

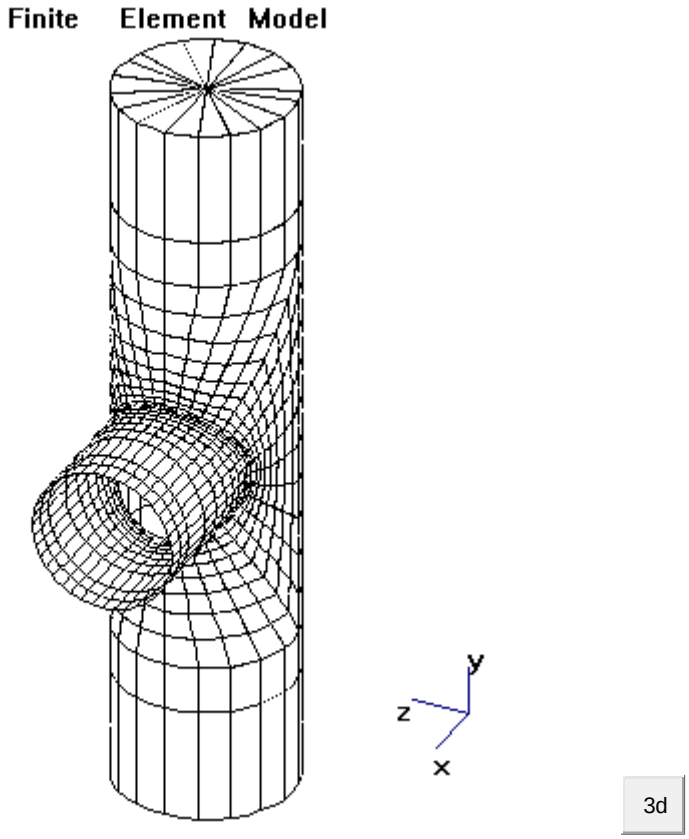

-
-

1) Pl < SPL (SUS Membrane) Case 1

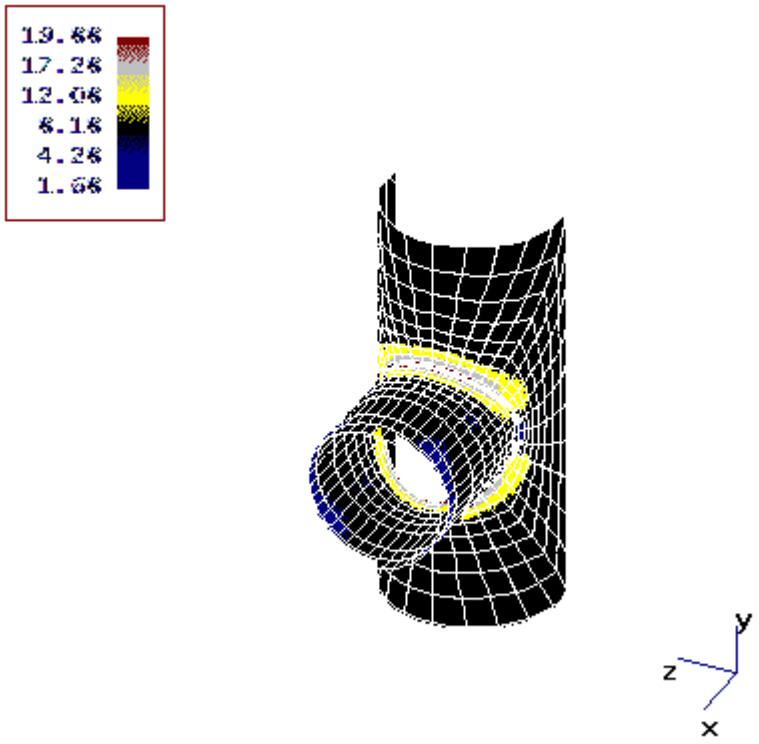

3d | 3d(Deformed)

-
-

2) Qb < SPS (SUS Bending) Case 1

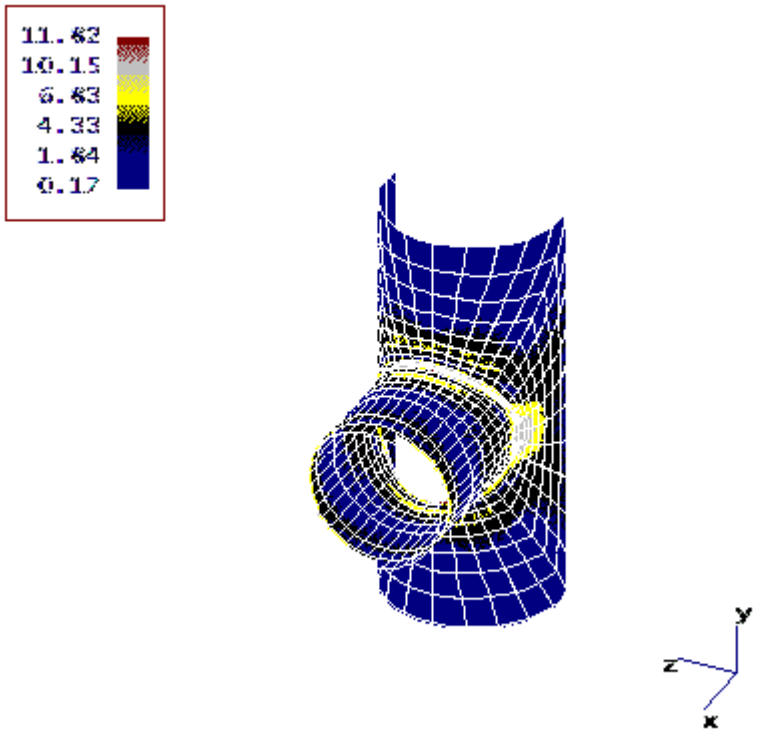

3d | 3d(Deformed)

-
-

3) Pl+Pb+Q < SPS (SUS Inside) Case 1

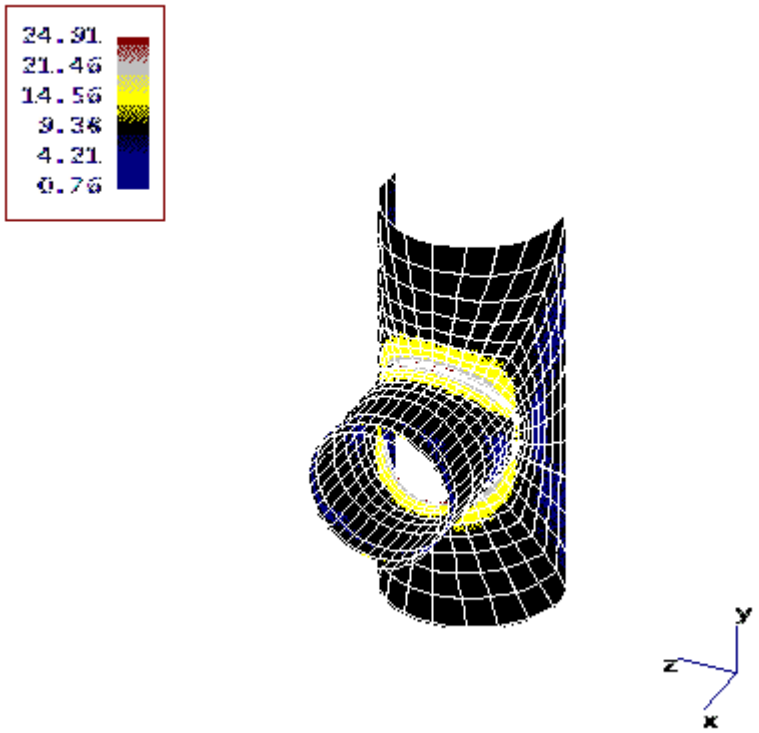

3d | 3d(Deformed)

-
-

4) Pl+Pb+Q < SPS (SUS Outside) Case 1

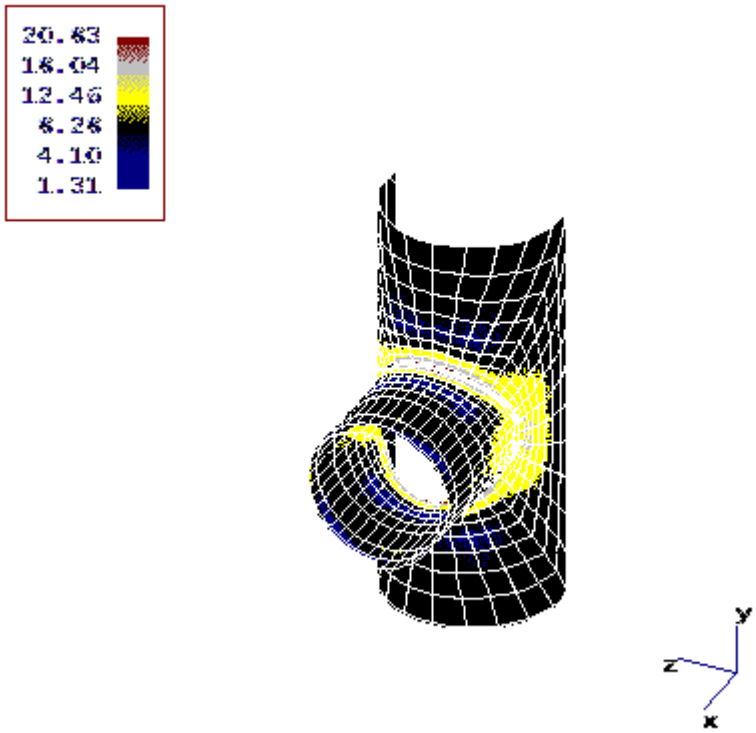

3d | 3d(Deformed)

-
-

5) S1+S2+S3 < 4S (SUS S1+S2+S3) Case 1

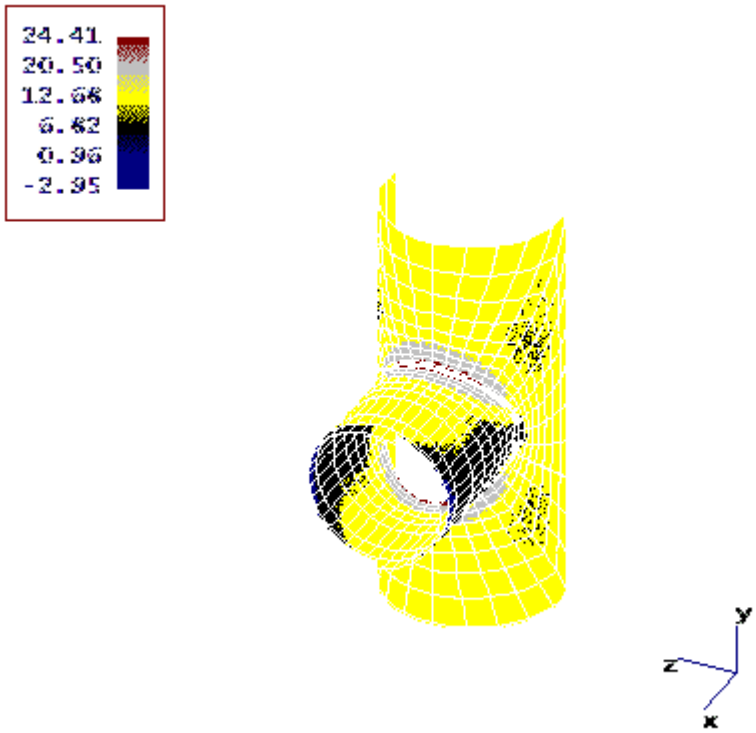

3d | 3d(Deformed)

-
-

6) Pl+Pb+Q < SPS (OPE Inside) Case 2

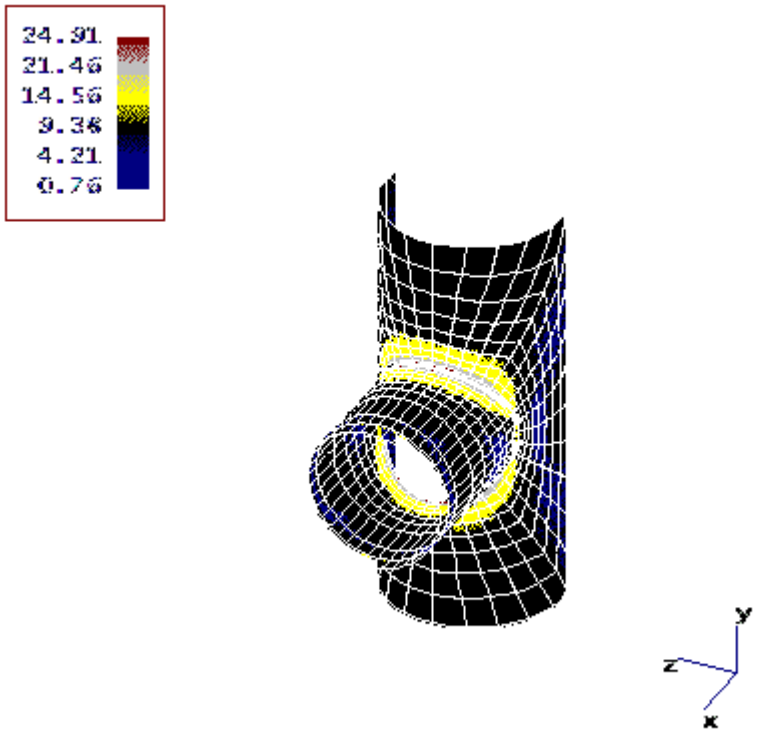

3d | 3d(Deformed)

-
-

7) Pl+Pb+Q < SPS (OPE Outside) Case 2

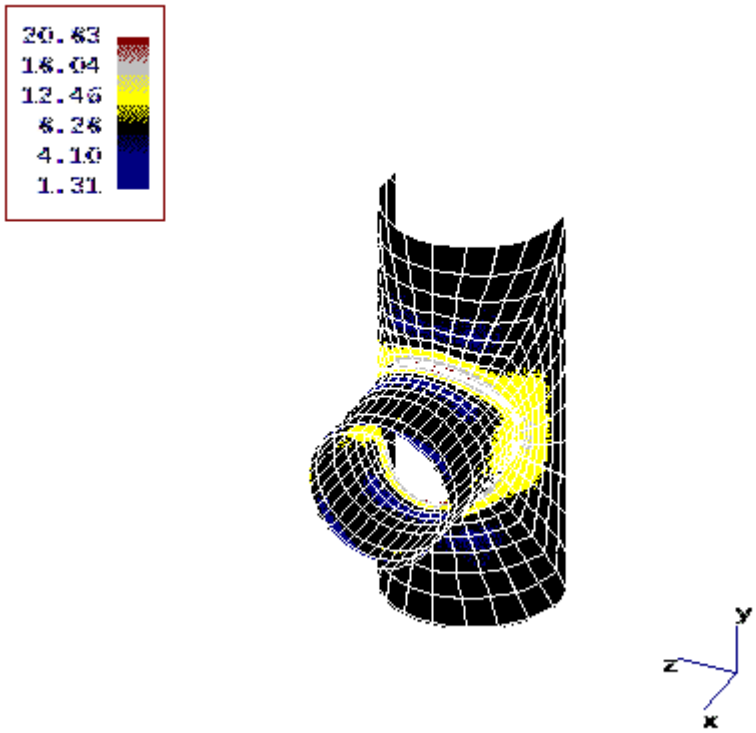

3d | 3d(Deformed)

-
-

8) Pl+Pb+Q+F < 2Sa (EXP Inside) Case 2

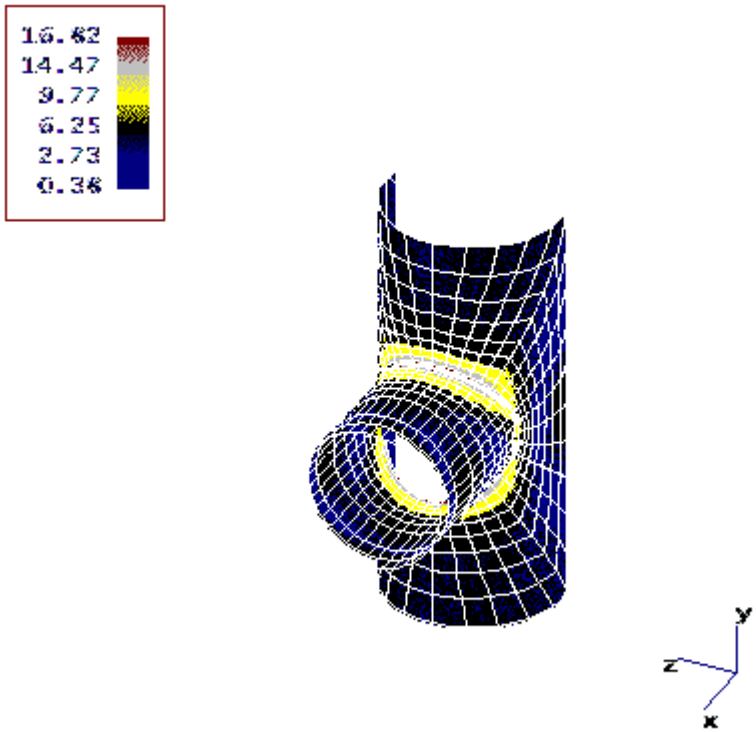

3d | 3d(Deformed)

-
-

9) Pl+Pb+Q+F < 2Sa (EXP Outside) Case 2

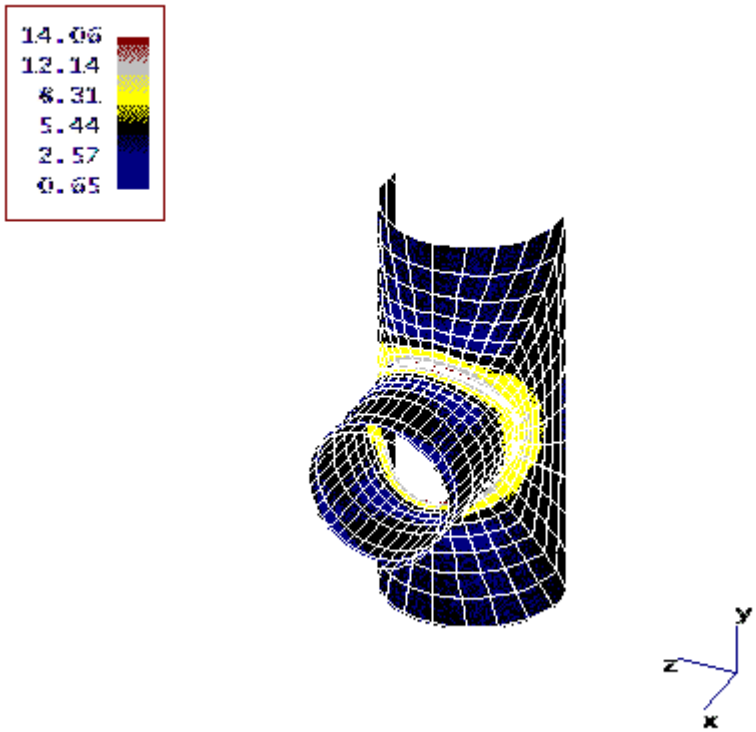

3d | 3d(Deformed)

-
-

10) Membrane < User (OPE Membrane) Case 2

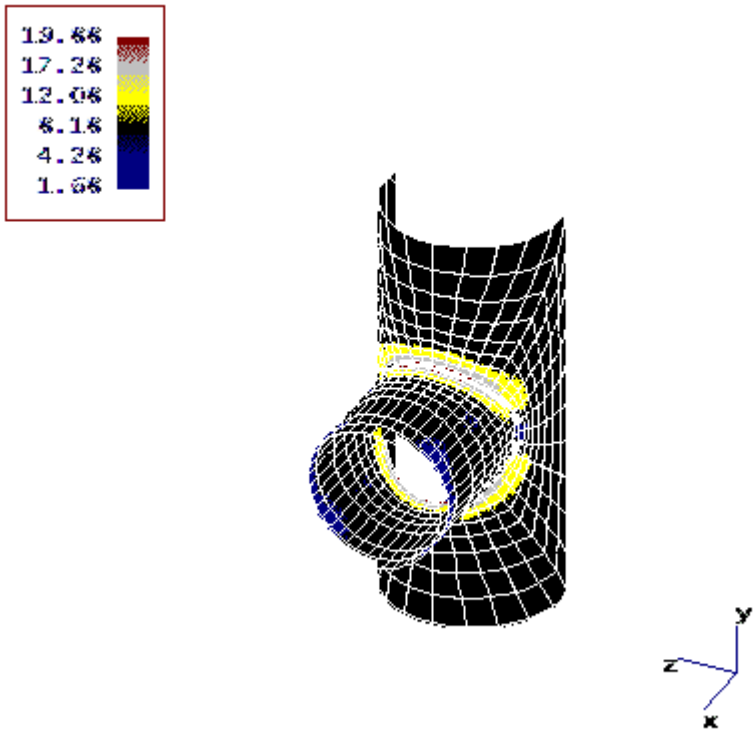

3d | 3d(Deformed)

-
-

11) Bending < User (OPE Bending) Case 2

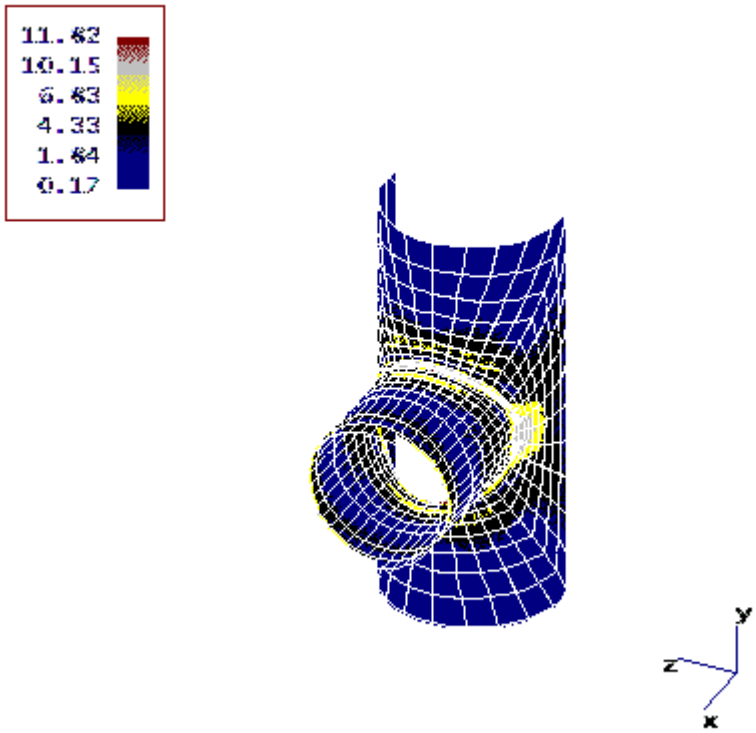

3d | 3d(Deformed)

-
-

12) Pl+Pb+Q+F < 2Sa (SIF Outside) Case 3

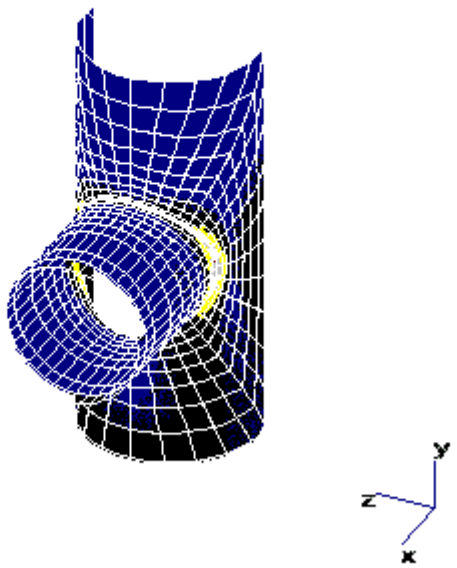

3d | 3d(Deformed)

-
-

13) Pl+Pb+Q+F < 2Sa (SIF Outside) Case 4

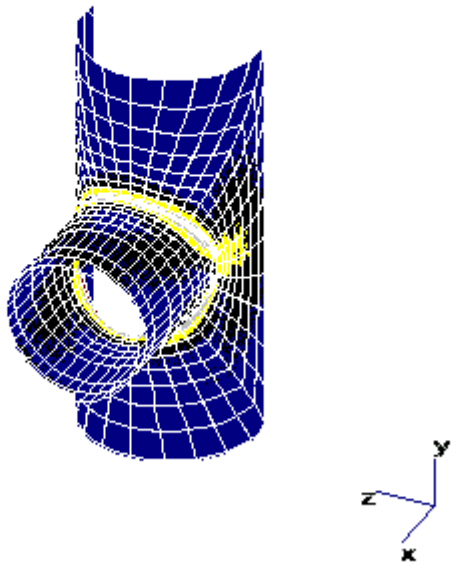

3d | 3d(Deformed)

-
-

14) Pl+Pb+Q+F < 2Sa (SIF Outside) Case 5

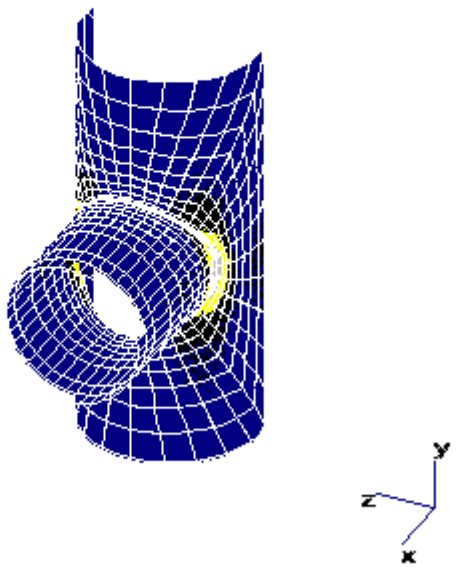

3d | 3d(Deformed)

-
-

15) Pl+Pb+Q+F < 2Sa (SIF Outside) Case 6

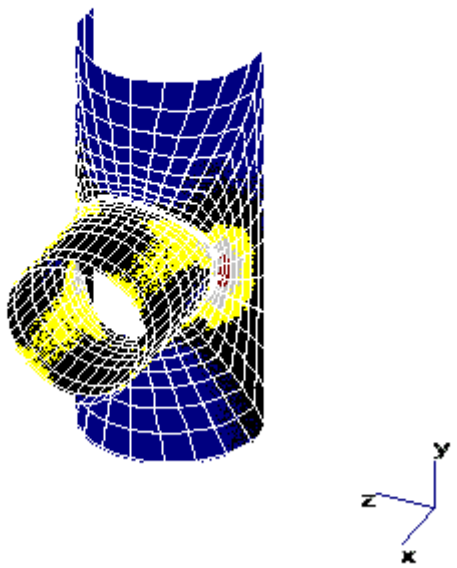

3d | 3d(Deformed)

-
-

16) Pl+Pb+Q+F < 2Sa (SIF Outside) Case 7

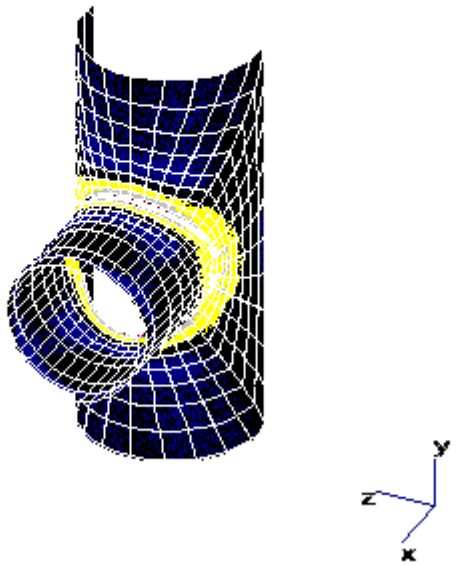

3d | 3d(Deformed)

•

Lifting Lug Calculation - C-200

Lifting Lug Calculation

Tag No.: C-200
Equipment: Still Column
Reference: Pressure Vessel Design Manual By Dennis R.Moss

A: Lifting Lug Design

A1: Loads

Wt. of Exchanger =	586	Kg
Material =	SA-240 316L	
Yield Stress =	149.6	Mpa
Allowable Stress =	101	Mpa
Impact Factor =	2	
Sling Angle (θ) =	90	
NO. of Lifting Points =	2	
Total Vertical Wt. (Fv) =	11.50	KN
Total Load at Lifting Point (Ft) =	5.75	KN

A2: Dimentions

Lug Thickness (t) =	10	mm
Plate Thickness =	9.27	mm
Radius (R) =	55	mm
e =	120	mm
Lug Width (W) =	110	mm
Hole (D) =	38	mm

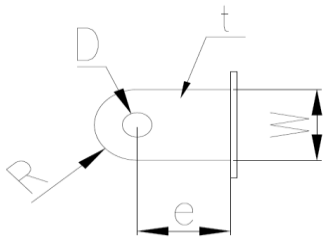

A3: Stress Analysis

Bearing Stress:

Bearing Area =	3.8	cm^2	Ab=Dxt
Alowable Bearing Stress =	134.64	Mpa	0.9xFy
Bearing Stess (fp) =	15.1	Mpa	**(O.K !!)**

Shear Stress: (At Top of Lug)

Shear Area =	3.6	cm^2	As=(W-D/2)xt
Alloawable Shear Stress =	59.84	Mpa	0.4xFy
Actual shear streess(fv) =	16.0	Mpa	(O.K !!)

Shear Stress: (At Pin Hole)

Shear Area =	7.2	cm^2	As=2x(W-D/2)xt
Alloawable Shear Stress =	59.84	Mpa	0.4xFy
Actual shear streess(fv) =	8.0	Mpa	(O.K !!)

Tensile Stress:

Tensile Area =	7.2	cm^2	At=2x(W-D/2)xt
Alloawable Tensile Stress =	89.76	Mpa	0.6xFy
Actual Tensile streess(ft) =	8.0	Mpa	(O.K !!)

Bending Stress:

Section Modulus =	20.2	cm^3	Z=t*W^2/6
Alloawable Bending Stress =	89.76	Mpa	0.6xFy
Bending moment (M) =	69.0	KN.cm	
Actual Bending streess(fb) =	34.2	Mpa	(O.K !!)

Combined Stress:

Combined Tensile & Bending Stress			
Stress Ratio, [(ft/Ft) + (fb/Fb)] ≤ 1	0.47		(O.K !!)
Combined Tensile & Shear Stress	28.8	Mpa	fcr = √(ft^2 + 3fv^2)
fc ≤ S allowable	101.0		(O.K !!)

A4: Weld Calculation

Weld leg Size =	7	mm	(OK !!)
Shear Load Due Fv	26.13	N/mm	
Shear Load Due M	171.0	N/mm	
Total Load	173.0	N/mm	
Allowable Shear	82.3	Mpa	
Require Weld Size	3.0	mm	

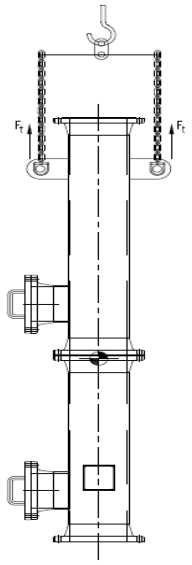

Lifting WRC

Input Echo, 107/537 Item 1, Description: New WRC 107/537

```
Diameter Basis for Vessel                    Vbasis      ID
Cylindrical or Spherical Vessel              Cylsph      Cylindrical
Internal Corrosion Allowance                    Cas      0.0000  mm.
Vessel Diameter                                  Dv     254.600  mm.
Vessel Thickness                                 Tv       9.270  mm.

Design Temperature                                         85.00  C
Vessel Material                                     SA-312 TP316L
Vessel UNS Number                                          S31603
Vessel Cold S.I. Allowable                      Smc      115.15  N./mm^2
Vessel Hot  S.I. Allowable                      Smh      115.15  N./mm^2

Attachment Type                                 Type     Rectangular
Parameter C11                                    C11       10.00  mm.
Parameter C22                                    C22      110.00  mm.

Thickness of Reinforcing Pad                    Tpad       8.000  mm.
Pad Parameter C11P                              C11p      85.000  mm.
Pad Parameter C22P                              C22p     165.000  mm.

Design Internal Pressure                         Dp       0.000  bars
Include Pressure Thrust                                      No
```

External Forces and Moments in WRC 107/537 Convention:

```
Radial Load             (SUS)                     P         0.0  Kgf
Longitudinal Shear      (SUS)                    Vl       586.0  Kgf
Circumferential Shear   (SUS)                    Vc         0.0  Kgf
Circumferential Moment  (SUS)                    Mc         0.0  Kg-m.
Longitudinal Moment     (SUS)                    Ml        70.3  Kg-m.
Torsional Moment        (SUS)                    Mt         0.0  Kg-m.


Use Interactive Control                                  No
WRC107 Version                               Version     March 1979 ( B1 & B2 )

Include Pressure Stress Indices per Div. 2                   No
Compute Pressure Stress per WRC-368                          No
```

Note:
WRC Bulletin 537 provides equations for the dimensionless curves found in bulletin 107. As noted in the foreword to bulletin 537, "537 is equivalent to WRC 107". Where 107 is printed in the results below, "537" can be interchanged with "107".

WRC 107 Stress Calculation for SUStained loads:

Radial Load	P	0.0	Kgf
Circumferential Shear	VC	0.0	Kgf
Longitudinal Shear	VL	586.0	Kgf
Circumferential Moment	MC	0.0	Kg-m.
Longitudinal Moment	ML	70.3	Kg-m.
Torsional Moment	MT	0.0	Kg-m.

Dimensionless Parameters used : Gamma = 7.87

Dimensionless Loads for Cylindrical Shells at Attachment Junction:

Curves read for 1979 B1/B2	Beta	Figure		Value	Location
N(PHI) / (P/Rm)	0.193	4C		1.414	(A,B)
N(PHI) / (P/Rm)	0.193	3C		1.264	(C,D)
M(PHI) / (P)	0.104	2C1		0.161	(A,B)
M(PHI) / (P)	0.104	1C		0.190	(C,D)
N(PHI) / (MC/(Rm**2 * Beta))	0.082	3A	!	0.064	(A,B,C,D)
M(PHI) / (MC/(Rm * Beta))	0.107	1A		0.104	(A,B,C,D)
N(PHI) / (ML/(Rm**2 * Beta))	0.182	3B	!	0.741	(A,B,C,D)
M(PHI) / (ML/(Rm * Beta))	0.164	1B1		0.054	(A,B,C,D)
N(x) / (P/Rm)	0.152	3C		1.380	(A,B)
N(x) / (P/Rm)	0.152	4C		1.468	(C,D)
M(x) / (P)	0.159	1C1		0.149	(A,B)
M(x) / (P)	0.159	2C		0.115	(C,D)
N(x) / (MC/(Rm**2 * Beta))	0.082	4A	!	0.096	(A,B,C,D)
M(x) / (MC/(Rm * Beta))	0.151	2A		0.060	(A,B,C,D)
N(x) / (ML/(Rm**2 * Beta))	0.182	4B	!	0.191	(A,B,C,D)
M(x) / (ML/(Rm * Beta))	0.226	2B1		0.074	(A,B,C,D)

Note - The ! mark next to the figure name denotes curve value exceeded.

Stress Concentration Factors: Kn = 1.00, Kb = 1.00

Stresses in the Vessel at the Attachment Junction (N./mm^2)

Type of Stress	Load	Stress Intensity Values at Au	Al	Bu	Bl	Cu	Cl	Du	Dl
Circ. Memb.	P	0.0	0.0	0.0	0.0	0.0	0.0	0.0	0.0

```
 Circ. Bend. P  |      0.0|      0.0|      0.0|      0.0|      0.0|      0.0|
0.0|      0.0|
 Circ. Memb. MC |      0.0|      0.0|      0.0|      0.0|      0.0|      0.0|
0.0|      0.0|
 Circ. Memb. MC |      0.0|      0.0|      0.0|      0.0|      0.0|      0.0|
0.0|      0.0|
 Circ. Memb. ML |     -6.0|     -6.0|      6.0|      6.0|      0.0|      0.0|
0.0|      0.0|
 Circ. Bend. ML |    -33.7|     33.7|     33.7|    -33.7|      0.0|      0.0|
0.0|      0.0|
                |
|
 Tot. Circ. Str.|    -39.7|     27.8|     39.7|    -27.8|      0.0|      0.0|
0.0|      0.0|
 ---------------------------------------------------------------------------------------
-----------
 Long. Memb. P  |      0.0|      0.0|      0.0|      0.0|      0.0|      0.0|
0.0|      0.0|
 Long. Bend. P  |      0.0|      0.0|      0.0|      0.0|      0.0|      0.0|
0.0|      0.0|
 Long. Memb. MC |      0.0|      0.0|      0.0|      0.0|      0.0|      0.0|
0.0|      0.0|
 Long. Bend. MC |      0.0|      0.0|      0.0|      0.0|      0.0|      0.0|
0.0|      0.0|
 Long. Memb. ML |     -2.7|     -2.7|      2.7|      2.7|      0.0|      0.0|
0.0|      0.0|
 Long. Bend. ML |    -33.6|     33.6|     33.6|    -33.6|      0.0|      0.0|
0.0|      0.0|
                |
|
 Tot. Long. Str.|    -36.3|     30.9|     36.3|    -30.9|      0.0|      0.0|
0.0|      0.0|
 ---------------------------------------------------------------------------------------
-----------
       Shear VC |      0.0|      0.0|      0.0|      0.0|      0.0|      0.0|
0.0|      0.0|
       Shear VL |      0.0|      0.0|      0.0|      0.0|     -1.5|     -1.5|
1.5|      1.5|
       Shear MT |      0.0|      0.0|      0.0|      0.0|      0.0|      0.0|
0.0|      0.0|
                |
|
      Tot. Shear|      0.0|      0.0|      0.0|      0.0|     -1.5|     -1.5|
1.5|      1.5|
 ---------------------------------------------------------------------------------------
-----------
      Str. Int. |     39.7|     30.9|     39.7|     30.9|      3.0|      3.0|
3.0|      3.0|

 Dimensionless Parameters used :   Gamma =   14.23
```

Dimensionless Loads for Cylindrical Shells at Pad edge:

Curves read for 1979 B1/B2	Beta	Figure		Value	Location
N(PHI) / (P/Rm)	0.588	4C	!	1.550	(A,B)
N(PHI) / (P/Rm)	0.588	3C	!	0.868	(C,D)
M(PHI) / (P)	0.414	2C1		0.023	(A,B)
M(PHI) / (P)	0.414	1C	!	0.055	(C,D)
N(PHI) / (MC/(Rm**2 * Beta))	0.402	3A	!	0.605	(A,B,C,D)
M(PHI) / (MC/(Rm * Beta))	0.438	1A		0.072	(A,B,C,D)
N(PHI) / (ML/(Rm**2 * Beta))	0.501	3B	!	1.095	(A,B,C,D)
M(PHI) / (ML/(Rm * Beta))	0.474	1B1		0.015	(A,B,C,D)
N(x) / (P/Rm)	0.507	3C	!	0.868	(A,B)
N(x) / (P/Rm)	0.507	4C	!	1.550	(C,D)
M(x) / (P)	0.521	1C1	!	0.031	(A,B)
M(x) / (P)	0.521	2C	!	0.031	(C,D)
N(x) / (MC/(Rm**2 * Beta))	0.402	4A	!	1.418	(A,B,C,D)
M(x) / (MC/(Rm * Beta))	0.545	2A	!	0.032	(A,B,C,D)
N(x) / (ML/(Rm**2 * Beta))	0.501	4B	!	0.556	(A,B,C,D)
M(x) / (ML/(Rm * Beta))	0.560	2B1	!	0.025	(A,B,C,D)

Note - The ! mark next to the figure name denotes curve value exceeded.

Stress Concentration Factors: Kn = 1.00, Kb = 1.00

Stresses in the Vessel at the Edge of Reinforcing Pad (N./mm^2)

Type of Stress	Load	Stress Intensity Values at Au	Al	Bu	Bl	Cu	Cl	Du	Dl
Circ. Memb.	P	0.0	0.0	0.0	0.0	0.0	0.0	0.0	0.0
Circ. Bend.	P	0.0	0.0	0.0	0.0	0.0	0.0	0.0	0.0
Circ. Memb.	MC	0.0	0.0	0.0	0.0	0.0	0.0	0.0	0.0
Circ. Memb.	MC	0.0	0.0	0.0	0.0	0.0	0.0	0.0	0.0
Circ. Memb.	ML	-8.1	-8.1	8.1	8.1	0.0	0.0	0.0	0.0
Circ. Bend.	ML	-11.7	11.7	11.7	-11.7	0.0	0.0	0.0	0.0

```
                |
|
 Tot. Circ. Str.|    -19.8|      3.6|     19.8|     -3.6|      0.0|      0.0|
0.0|      0.0|
 ---------------------------------------------------------------------------------------
-----------
 Long. Memb. P  |      0.0|      0.0|      0.0|      0.0|      0.0|      0.0|
0.0|      0.0|
 Long. Bend. P  |      0.0|      0.0|      0.0|      0.0|      0.0|      0.0|
0.0|      0.0|
 Long. Memb. MC |      0.0|      0.0|      0.0|      0.0|      0.0|      0.0|
0.0|      0.0|
 Long. Bend. MC |      0.0|      0.0|      0.0|      0.0|      0.0|      0.0|
0.0|      0.0|
 Long. Memb. ML |     -6.1|     -6.1|      6.1|      6.1|      0.0|      0.0|
0.0|      0.0|
 Long. Bend. ML |    -16.0|     16.0|     16.0|    -16.0|      0.0|      0.0|
0.0|      0.0|
                |
|
 Tot. Long. Str.|    -22.1|     10.0|     22.1|    -10.0|      0.0|      0.0|
0.0|      0.0|
 ---------------------------------------------------------------------------------------
-----------
       Shear VC |      0.0|      0.0|      0.0|      0.0|      0.0|      0.0|
0.0|      0.0|
       Shear VL |      0.0|      0.0|      0.0|      0.0|     -1.9|     -1.9|
1.9|      1.9|
       Shear MT |      0.0|      0.0|      0.0|      0.0|      0.0|      0.0|
0.0|      0.0|
                |
|
      Tot. Shear|      0.0|      0.0|      0.0|      0.0|     -1.9|     -1.9|
1.9|      1.9|
 ---------------------------------------------------------------------------------------
-----------
      Str. Int. |     22.1|     10.0|     22.1|     10.0|      3.8|      3.8|
3.8|      3.8|

 ---------------------------------------------------------------------------------------
-----------
```

WRC 107/537 Stress Summations:

Vessel Stress Summation at Attachment Junction (N./mm^2)

Type of Stress Load	Stress Intensity Values at Au	Al	Bu	Bl	Cu	Cl	Du	Dl
Circ. Pm (SUS)	0.0	0.0	0.0	0.0	0.0	0.0	0.0	0.0
Circ. Pl (SUS)	-6.0	-6.0	6.0	6.0	0.0	0.0	0.0	0.0
Circ. Q (SUS)	-33.7	33.7	33.7	-33.7	0.0	0.0	0.0	0.0
Long. Pm (SUS)	0.0	0.0	0.0	0.0	0.0	0.0	0.0	0.0
Long. Pl (SUS)	-2.7	-2.7	2.7	2.7	0.0	0.0	0.0	0.0
Long. Q (SUS)	-33.6	33.6	33.6	-33.6	0.0	0.0	0.0	0.0
Shear Pm (SUS)	0.0	0.0	0.0	0.0	0.0	0.0	0.0	0.0
Shear Pl (SUS)	0.0	0.0	0.0	0.0	-1.5	-1.5	1.5	1.5
Shear Q (SUS)	0.0	0.0	0.0	0.0	0.0	0.0	0.0	0.0
Pm (SUS)	0.0	0.0	0.0	0.0	0.0	0.0	0.0	0.0
Pm+Pl (SUS)	6.0	6.0	6.0	6.0	3.0	3.0	3.0	3.0
Pm+Pl+Q (Total)	39.7	30.9	39.7	30.9	3.0	3.0	3.0	3.0

Vessel Stress Summation Comparison (N./mm^2):

Type of Stress Int.	Max. S.I.	S.I. Allowable	Result
Pm (SUS)	0.00	115.15	Passed
Pm+Pl (SUS)	5.98	172.72	Passed
Pm+Pl+Q (TOTAL)	39.73	345.44	Passed

*Because only sustained loads were specified, the Pm+Pl+Q allowable was 3 * Smh.*

WRC 107/537 Stress Summations:

Vessel Stress Summation at Reinforcing Pad Edge (N./mm^2)

Type of Stress	Load	Stress Intensity Values at Au	Al	Bu	Bl	Cu	Cl	Du	Dl
Circ. Pm	(SUS)	0.0	0.0	0.0	0.0	0.0	0.0	0.0	0.0
Circ. Pl	(SUS)	-8.1	-8.1	8.1	8.1	0.0	0.0	0.0	0.0
Circ. Q	(SUS)	-11.7	11.7	11.7	-11.7	0.0	0.0	0.0	0.0
Long. Pm	(SUS)	0.0	0.0	0.0	0.0	0.0	0.0	0.0	0.0
Long. Pl	(SUS)	-6.1	-6.1	6.1	6.1	0.0	0.0	0.0	0.0
Long. Q	(SUS)	-16.0	16.0	16.0	-16.0	0.0	0.0	0.0	0.0
Shear Pm	(SUS)	0.0	0.0	0.0	0.0	0.0	0.0	0.0	0.0
Shear Pl	(SUS)	0.0	0.0	0.0	0.0	-1.9	-1.9	1.9	1.9
Shear Q	(SUS)	0.0	0.0	0.0	0.0	0.0	0.0	0.0	0.0
Pm	(SUS)	0.0	0.0	0.0	0.0	0.0	0.0	0.0	0.0

```
 ---------------------------------------------------------------------------------------
-----------
 Pm+Pl (SUS)     |       8.1|       8.1|       8.1|       8.1|       3.8|       3.8|
3.8|       3.8|
 ---------------------------------------------------------------------------------------
-----------
 Pm+Pl+Q (Total)|      22.1|      10.0|      22.1|      10.0|       3.8|       3.8|
3.8|       3.8|
```

Vessel Stress Summation Comparison (N./mm^2):

```
 Type of         |     Max. S.I.     S.I. Allowable     |      Result      |
 Stress Int.     |                                      |                  |
 ---------------------------------------------------------------------------
 Pm (SUS)        |          0.00            115.15      |      Passed      |
 Pm+Pl (SUS)     |          8.13            172.72      |      Passed      |
 Pm+Pl+Q (TOTAL)|         22.09            345.44      |      Passed      |
```

*Because only sustained loads were specified, the Pm+Pl+Q allowable was 3 * Smh.*

PV Elite is a trademark of Intergraph CADWorx & Analysis Solutions, Inc. 2020